CLOVERLEAF FILING 2

EL PASO COUNTY, COLORADO

STORM SEWER AND POND PLANS

STANDARD NOTES FOR EL PASO COUNTY CONSTRUCTION PLANS

1. ALL DRAINAGE AND ROADWAY CONSTRUCTION SHALL MEET THE STANDARDS AND SPECIFICATIONS OF THE CITY OF COLORADO SPRINGS/EL PASO COUNTY DRAINAGE CRITERIA MANUAL, VOLUMES 1 AND 2, AND THE EL PASO COUNTY ENGINEERING CRITERIA MANUAL.

2. CONTRACTOR SHALL BE RESPONSIBLE FOR THE NOTIFICATION AND FIELD NOTIFICATION OF ALL EXISTING UTILITIES, WHETHER SHOWN ON THE PLANS OR NOT, BEFORE BEGINNING CONSTRUCTION. LOCATION OF EXISTING UTILITIES SHALL BE VERIFIED BY THE CONTRACTOR PRIOR TO CONSTRUCTION. CALL 811 TO CONTACT THE UTILITY NOTIFICATION CENTER OF COLORADO (UNCC).

3. CONTRACTOR SHALL KEEP A COPY OF THESE APPROVED PLANS, THE GRADING AND EROSION CONTROL PLAN, THE STORMWATER MANAGEMENT PLAN (SWMP), THE SOIL AND GEOTECHNICAL REPORT, AND THE APPROPRIATE DESIGN AND CONSTRUCTION STANDARDS AND SPECIFICATIONS AT THE JOB SITE AT ALL TIMES, INCLUDING THE FOLLOWING:
   3.1. EL PASO COUNTY ENGINEERING CRITERIA MANUAL (ECM)
   3.2. CITY OF COLORADO SPRINGS/ EL PASO COUNTY DRAINAGE CRITERIA MANUAL, VOLUMES 1 AND 2
   3.3. COLORADO DEPARTMENT OF TRANSPORTATION (CDOT) STANDARD SPECIFICATIONS AND BRIDGE CONSTRUCTION
   3.4. CDOT M&S STANDARDS

4. NOTWITHSTANDING ANYTHING DEPICTED IN THESE PLANS IN WORDS OR GRAPHIC REPRESENTATION, ALL DESIGN AND CONSTRUCTION RELATED TO ROADS, STORM DRAINAGE AND EROSION CONTROL SHALL CONFORM TO THE STANDARDS AND REQUIREMENTS OF THE MOST RECENT VERSIONS OF THE RELEVANT ADOPTED EL PASO COUNTY STANDARDS, INCLUDING THE LAND DEVELOPMENT CODE, THE EINGEERI9NG CRITERIA MANUAL, THE DRAINAGE CRITERIA MANUAL, AND THE DRAINAGE CRITERIA MANUAL VOLUME 2. ANY DEVIATIONS FROM REGULATIONS AND STANDARDS MUST BE REQUESTED, AND APPROVED, IN WRITING. ANY MODIFICATIONS NECESSARY TO MEET CRITERIA AFTER-THE-FACT WILL BE ENTIRELY THE DEVELOPER'S RESPONSIBILITY TO RECTIFY.

5. IT IS THE DESIGN ENGINEER'S RESPONSIBILITY TO ACCURATELY SHOW EXISTING CONDITIONS, BOTH ONSITE AND OFFSITE, ON THE CONSTRUCTION PLANS. ANY MODIFICATIONS NECESSARY DUE TO CONFLICTS, OMISSIONS, OR CHANGED CONDITIONS WILL BE ENTIRELY THE DEVELOPER'S RESPONSIBILITY TO RECTIFY.

6. CONTRACTOR SHALL SCHEDULE A PRE-CONSTRUCTION MEETING WITH EL PASO COUNTY PLANNING AND COMMUNITY DEVELOPMENT INSPECTIONS, PRIOR TO STARTING CONSTRUCTION.

7. IT IS THE CONTRACTOR'S RESPONSIBILITY TO UNDERSTAND THE REQUIREMENTS OF ALL JURISDICTIONAL AGENCIES TO OBTAIN ALL REQUIRED PERMITS, INCLUDING BUT NOT LIMITED TO EL PASO COUNTY EROSION AND STORMWATER QUALITY CONTROL PERMIT (ESQCP), REGIONAL BUILDING FLOODPLAIN DEVELOPMENT PERMIT, U.S. ARMY CORPS OF ENGINEERS-ISSUED 401 AND/OR 404 PERMITS, AND COUNTY AND STATE FUGITIVE DUST PERMITS.

8. CONTRACTOR SHALL NOT DEVIATE FROM THE PLANS WITHOUT FIRST OBTAINING WRITTEN APPROVAL FROM THE DESIGN ENGINEER AND PCD. CONTRACTOR SHALL NOTIFY THE DESIGN ENGINEER IMMEDIATELY UPON DISCOVERY OF ANY ERRORS OR INCONSISTENCIES.

9. CONTRACTOR SHALL COORDINATE GEOTECHNICAL TESTING PER ECM STANDARDS. PAVEMENT DESIGN SHALL BE APPROVED BY EL PASO COUNTY PCD PRIOR TO PLACEMENT OF CURB AND GUTTER AND PAVEMENT.

10. ALL CONSTRUCTION TRAFFIC MUST ENTER/EXIT THE SITE AT APPROVED CONSTRUCTION ACCESS POINTS.

11. SIGHT VISIBILITY TRIANGLES ARE IDENTIFIED IN THE PLANS SHALL BE PROVIDED AT ALL INTERSECTIONS. OBSTRUCTIONS GREATER THAN 18 INCHES ABOVE FLOWLINE ARE NOT ALLOWED IN SIGHT TRIANGLES.

12. SIGNING AND STRIPING SHALL COMPLY WITH EL PASO COUNTY DEPARTMENT OF PUBLIC WORKS AND MUTCD CRITERIA.

13. CONTRACTOR SHALL OBTAIN ANY PERMITS REQUIRED BY EL PASO COUNTY DEPARTMENT OF PUBLIC WORKS, INCLUDING WORK WITHIN THE RIGHT-OF-WAY AND SPECIAL TRANSPORT PERMITS.

14. THE LIMITS OF CONSTRUCTION SHALL REMAIN WITHIN THE PROPERTY LINE UNLESS OTHERWISE NOTED. THE OWENER/DEVELOPER SHALL OBTAIN WRITTEN PERMISSION AND EASEMENTS, WHERE REQUIRED, FROM ADJOINING PROPERTY OWNER(S) PRIOR TO ANY OFF-SITE DISTURBANCE, GRADING, OR CONSTRUCTION.

NOTES

1. SEE SHEET 1 FOR BENCHMARK. SEE SHEET 2 FOR LEGEND.
2. ALL STATIONING IS PIPE CENTERLINE UNLESS OTHERWISE NOTED.
3. ALL RCP STORM SEWER SHALL BE CLASS III UNLESS OTHERWISE NOTED.
4. PIPE LENGTHS ARE FROM INSIDE INLET WALL TO INSIDE INLET WALL, FROM CENTER OF MANHOLE TO INSIDE INLET WALL, OR FROM CENTER OF MANHOLE TO CENTER OF MANHOLE. PIPE LENGTHS INCLUDE FES OR HEADWALL.
5. ALL MANHOLE COVERS SHALL BE ORIENTED TO AVOID CURB, GUTTER, SIDEWALK AND CROSSPANS UNLESS OTHERWISE NOTED.
6. ALL MANHOLES ARE EL PASO COUNTY TYPE II UNLESS OTHERWISE SPECIFIED.
7. ALL MANHOLES HAVE AN ECCENTRIC CONE UNLESS OTHERWISE SPECIFIED.
8. ALL ON-GRADE INLETS ARE TO MATCH TBC ELEVATIONS AT EACH END, FOLLOWING STREET GRADES. SEE ROADWAY PLANS FOR REQUIRED ELEVATIONS.
9. INLET STATIONING IS TO CENTER OF INLET.
10. PIPES SHALL HAVE JOINT RESTRAINTS ON LAST 3 JOINTS AT PIPE OUTFALL.
11. ALL CURVED PIPES SHALL BE BUILT IN ACCORDANCE WITH THE AMERICAN CONCRETE PIPE ASSOCIATION (ACPA) DESIGN DATA 21. PIPE MANUFACTURER TO BE USED MUST BE ABLE TO MEET LENGTH AND JOINT OPENING CRITERIA PER ACPA & ALL APPLICABLE EL PASO COUNTY CRITERIA AND STANDARDS.
12. PIPE BEDDING SHALL CONFORM TO EL PASO COUNTY CONSTRUCTION STANDARDS AND SPECIFICATIONS. BEDDING FOR RCP PIPE SHALL BE AG7122 NO. 57/67 CRUSHED ROCK. SQUEEGEE OR MIXTURES CONTAINING SQUEEGEE SHALL NOT BE USED. BEDDING SHALL BE SIX TO EIGHT INCHES DEEP UNDER THE PIPE AND BACKFILLED TO THE SPRING LINE.
13. ALL STORM SEWER PIPES, INLETS, MANHOLES, AND APPURTENANCES WITHIN THE R.O.W. ARE PUBLIC. STORM FACILITIES OUTSIDE OF THE PUBLIC R.O.W. ARE PRIVATE, UNLESS OTHERWISE NOTED.
14. WHERE PIPES ENTER STRUCTURES ON A SKEW, CONTRACTOR IS REQUIRED TO EXTEND PIPE TO ENSURE THAT BOTH EDGES OF THE PIPE EXTEND INTO THE STRUCTURE. CONTRACTOR WILL THEN BE REQUIRED TO CUT PIPE FLUSH WITH THE INSIDE FACE OF THE STRUCTURE AND GROUT IN PLACE. UNLESS OTHERWISE NOTED.
15. ALL MATERIALS AND INSTALLATION PROCEDURES SHALL BE IN COMPLIANCE WITH MANUFACTURERS SPECIFICATIONS AND EL PASO COUNTY STANDARDS AND SPECIFICATION.
16. SEE DETAIL SHEETS FOR APPLICABLE DETAILS.
17. ALL INLETS REQUIRE A CURB TYPE AND FL TRANSITION (LOCAL DEPRESSION) DETAILED PER CDOT (M-604-12) TYPE R INLET DETAIL. SEE JR ROADWAY PLAN SHEETS AND DETAIL SHEET.
18. PIPES WITH PRESSURE HEAD SHALL USE WATER TIGHT JOINTS WITH A 100-YEAR SERVICE LIFE.
19. CONTRACTOR TO SUBMIT SHOP DRAWINGS FOR ALL EL PASO COUNTY TYPE I MANHOLES PRIOR TO CONSTRUCTION OR ORDERING MATERIALS.

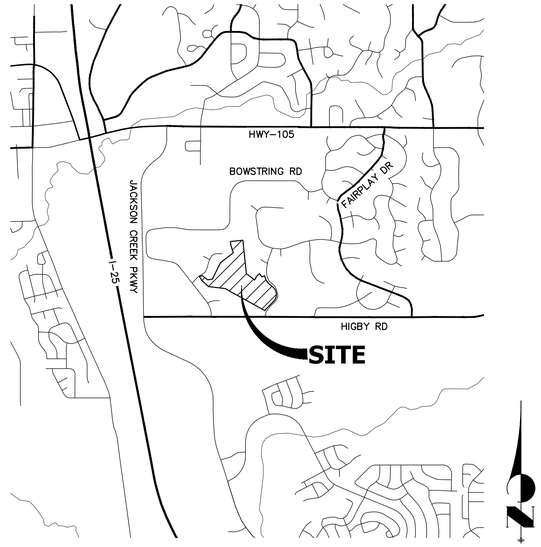

VICINITY MAP
SCALE: 1"=2000'

SHEET INDEX

1	–	COVER SHEET
2	–	LEGEND
3-8	–	STORM SEWER PLAN AND PROFILE
9-25	–	POND PLANS AND DETAILS
26-28	–	DETAIL SHEET

AB: INDICATES AS-BUILT INFORMATION. ANY INFORMATION NOT CROSSED OUT IS ASSUMED TO BE AS-BUILT INFORMATION.

AS-BUILTS
05/24/2023
SF-21-023

COLORADO REGISTERED MIKE BRAMLETT 32314 PROFESSIONAL ENGINEER

PCD File No. SF-21-023

Know what's **below.**
Call before you dig.

CONTACTS:

OWNER	CND-CLOVERLEAF, LLC ATTN: AZIZ SIDDIQUI 1111 N. POST OAK ROAD HOUSTON, TX 77055 P~224-415-6619
DEVELOPER	MONUMENT HILL CM LLC ATTN: JOE DESJARDIN 1864 WOODMOOR DRIVE, SUITE 100 COLORADO SPRINGS, CO 80920 P~719-476-0800
CONTRACTOR/OPERATOR (EROSION CONTROL)	MONUMENT HILL CM LLC ATTN: CHARLIE WILLIAMS 1864 WOODMOOR DRIVE, SUITE 100 COLORADO SPRINGS, CO 80920 P~719-492-1933
ENGINEER/SURVEYOR	JR ENGINEERING, LLC ATTN: MIKE A. BRAMLETT 5475 TECH CENTER DRIVE, SUITE 235 COLORADO SPRINGS, CO 80919 P~303-267-6240
FIRE PROTECTION DISTRICT	TRI-LAKES MONUMENT FPD 16055 OLD FOREST POINT, SUITE 103 MONUMENT, CO 80132 P~719-484-0911
DISTRICT	WOODMOOR WATER & SANITATION DISTRICT NO. 1 1845 WOODMOOR DRIVE MONUMENT, CO 80132 P~719-488-2525 EXT. 0
EL PASO COUNTY	PLANNING AND COMMUNITY DEVELOPMENT 2880 INTERNATIONAL CIRCLE, SUIT 110 COLORADO SPRINGS, CO 80910 P~719-520-6819 DEPARTMENT OF PUBLIC WORKS 3275 AKERS DR COLORADO SPRINGS, CO 80922 P~719-529-6460

BENCHMARK

NGS MONUMENT T 294 BEING MONUMENTED BY A 3-1/4" BRASS DISC SET IN A 4'X4' BOULDER, LOCATED 1.8 MILES EAST ALONG HIGBY ROAD FROM ITS INTERSECTION WITH JACKSON CREEK PARKWAY, 40 FEET SOUTH OF THE CENTERLINE OF THE ROAD, 6 FEET SOUTH OF A FENCE, AND 6.2 FEET SOUTH OF A WITNESS POST. SAID MONUMENT HAVING A PUBLISHED ELEVATION OF 7247.10 FEET, NAVD88.

BASIS OF BEARING

THE BASIS OF BEARINGS IS THE WESTERLY LINE OF TRACT, B, WOODMOOR PLACER, BEING MONUMENTED BY A 1-1/4" YELLOW PLASTIC CAP ILLEGIBLE AT BOTH ENDS. SAID LINE BEARING N26°20'33'E AS REFERENCED TO COLORADO STATE PLANE CENTRAL ZONE.

OWNER/DEVELOPER STATEMENT

I, THE OWNER/DEVELOPER HAVE READ AND WILL COMPLY WITH ALL OF THE REQUIREMENTS SPECIFIED IN THESE DETAILED PLANS AND SPECIFICATIONS.

Joseph W. DesJardin — 11/12/2021

JOE DESJARDIN — DATE

MONUMENT HILL CM LLC
1864 WOODMOOR DRIVE, SUITE 100
COLORADO SPRINGS, CO 80920

EL PASO COUNTY STATEMENT

COUNTY PLAN REVIEW IS PROVIDED ONLY FOR GENERAL CONFORMANCE WITH COUNTY DESIGN CRITERIA. THE COUNTY IS NOT RESPONSIBLE FOR THE ACCURACY AND ADEQUACY OF THE DESIGN, DIMENSIONS, AND/OR ELEVATIONS WHICH SHALL BE CONFIRMED AT THE JOB SITE. THE COUNTY THROUGH THE APPROVAL OF THIS DOCUMENT ASSUMES NO RESPONSIBILITY FOR COMPLETENESS AND/OR ACCURACY OF THIS DOCUMENT.

FILED IN ACCORDANCE WITH THE REQUIREMENTS OF THE EL PASO COUNTY LAND DEVELOPMENT CODE, DRAINAGE CRITERIA MANUAL, VOLUMES 1 AND 2, AND ENGINEERING CRITERIA MANUAL AS AMENDED.

IN ACCORDANCE WITH ECM SECTION 1.12, THESE CONSTRUCTION DOCUMENTS WILL BE VALID FOR CONSTRUCTION FOR A PERIOD OF 2 YEARS FROM THE DATE SIGNED BY THE EL PASO COUNTY ENGINEER. IF CONSTRUCTION HAS NOT STARTED WITHIN THOSE 2 YEARS, THE PLANS WILL NEED TO BE RESUBMITTED FOR APPROVAL, INCLUDING PAYMENT OF REVIEW FEES AT THE PLANNING AND COMMUNITY DEVELOPMENT DIRECTORS DISCRETION.

APPROVED
Engineering Department
01/31/2022 5:48:20 PM
dsdnjkamp
EPC Planning & Community Development Department

JENNIFER IRVINE, P.E.
COUNTY ENGINEER/ECM ADMINISTRATOR

ENGINEER'S STATEMENT

THESE DETAILED PLANS AND SPECIFICATIONS WERE PREPARED UNDER MY DIRECT SUPERVISION. SAID PLANS AND SPECIFICATIONS HAVE BEEN PREPARED ACCORDING TO THE CRITERIA ESTABLISHED BY THE COUNTY FOR DETAILED ROADWAY, DRAINAGE, GRADING AND EROSION CONTROL PLANS AND SPECIFICATIONS, AND SAID PLANS AND SPECIFICATIONS ARE IN CONFORMITY WITH APPLICABLE MASTER DRAINAGE PLANS AND MASTER TRANSPORTATION PLANS. SAID PLAN AND SPECIFICATIONS MEET THE PURPOSES FOR WHICH THE PARTICULAR ROADWAY AND DRAINAGE FACILITIES ARE DESIGNED AND ARE CORRECT TO THE BEST OF MY KNOWLEDGE AND BELIEF. I ACCEPT RESPONSIBILITY FOR ANY LIABILITY CAUSED BY ANY NEGLIGENT ACTS, ERRORS OR OMISSIONS ON MY PART IN PREPARATION OF THESE DETAILED PLANS AND SPECIFICATIONS.

Mike Bramlett — COLORADO REGISTERED MIKE BRAMLETT 32314 PROFESSIONAL ENGINEER — 11/11/21

MIKE A. BRAMLETT, P.E. — DATE
COLORADO P.E. 32314
FOR AND ON BEHALF OF JR ENGINEERING, LLC

UNTIL SUCH TIME AS THESE DRAWINGS ARE APPROVED BY THE APPROPRIATE REVIEWING AGENCIES, JR ENGINEERING APPROVES THEIR USE ONLY FOR THE PURPOSES DESIGNATED BY WRITTEN AUTHORIZATION.

PREPARED FOR
MONUMENT HILL CM LLC
1864 WOODMOOR DR, STE 100
COLORADO SPRINGS, CO 80920
ATTN: JOE DESJARDIN
(719) 476-0800
JDESJARDIN@PROTERRACO.COM

J·R ENGINEERING
A Westrian Company
Centennial 303-740-9393 • Colorado Springs 719-593-2593
Fort Collins 970-491-9888 • www.jrengineering.com

No.	REVISION	BY	DATE
1	REPLOTTED SHEETS	GAG	12/15/21

H-SCALE	1"=2000'
V-SCALE	N/A
DATE	11/11/21
DESIGNED BY	SAV
DRAWN BY	SAV
CHECKED BY	

CLOVERLEAF FILING 2

COVER SHEET

SHEET 1 OF 28

JOB NO. 25158.01

X:\2510000.all\25158\01\Drawings\Sheet Dwgs\CDs\25158\01\CV01.dwg, CV01, 11/11/2021 1:56:51 PM, CS

LAYER LINETYPE LEGEND

	EXISTING	PROPOSED
PHASE LINE		
MATCH LINE		
SECTION LINE		
BOUNDARY LINE		
PROPERTY LINE		
EASEMENT LINE		
RIGHT OF WAY		
R.O.W. A LINE	A	A
CENTERLINE		
CITY LIMITS		
WIRE FENCE		
CHAIN LINK FENCE		
WOOD FENCE		
MASONRY FENCE		
GUARDRAIL		
CONC. BARRIER		
CABLE TV	TV	TV TV
ELECTRIC	E	E E
FIBER OPTIC	FO	FO FO
GAS MAIN	G	G G
IRRIGATION MAIN	IRR	IRR IRR
OIL/PETRO. MAIN	O	O O
OVERHEAD UTILITY	OHU	OHU OHU
SANITARY SEWER	S	
STORM DRAIN		
TELEPHONE	T	T T
WATER MAIN	W	W
RAW WATER LINE	RWL	RWL RWL
SWALE/WATERWAY FLOWLINE		
DIVERSION DITCH		
DIVERSION CHANNEL		
MAJOR DRAINAGE BASIN		
MINOR DRAINAGE BASIN		
TOP OF SLOPE		
TOE OF SLOPE		
EDGE OF WATER		
INDEX CONTOUR	6100	6100
INTERMEDIATE CONTOUR		
DEPRESSION CONT. (INDEX)	6100	6100
DEPRESSION CONT. (INTER)		
TOP OF CUTS		
TOE OF FILLS		
CUT AND FILL LINE		C/F C/F
SILT FENCE	SF SF	SF SF
100 YEAR FLOODPLAIN	100YR	100YR
500 YEAR FLOODPLAIN	500YR	500YR
FLOODWAY	FLDWY	FLDWY
BASE FLOOD ELEVATION		
EDGE OF WETLANDS		
STONE WALL		

UTILITIES LEGEND

	EXISTING	PROPOSED
STORM SEWER		
MANHOLE		
STORM INLET		
AREA INLET – SQUARE		
AREA INLET – ROUND		
FLARED END SECTION		
RIPRAP		
SANITARY SEWER		
LINE MARKER	Mkr San	
SERVICE MARKER		
CLEAN-OUT		
MANHOLE W/ DIRECTIONAL FLOW ARROW		
WATER LINE		
LINE MARKER	Mkr W	
SERVICE MARKER		
FIRE HYDRANT		
FIRE CONNECTION		
MANHOLE		
BEND		
BLOW-OFF VALVE		
WELL	WELL	WELL
METER		
VALVE		
REDUCER		
THRUST BLOCK		
CROSS		
PLUG W/ THRUST BLOCK		
TEE		
REVERSE ANCHOR		
ANODE		
AIR & VACUUM VALVE ASSEMBLY		
TRANSMISSION BLOW-OFF ASSEMBLY		
GAS LINE		
MARKER	Mkr G	
SERVICE MARKER		
METER		
VALVE		
PLUG		
TEE		
DRY UTILITIES		
CABLE TV MARKER	Mkr TV	
CABLE TELEVISION PEDESTAL		
ELECTRIC MARKER	Mkr E	
ELECTRIC SERVICE MARKER		
ELECTRICAL PEDESTAL		
ELECTRICAL METER		
ELECTRICAL MANHOLE		
FIBER-OPTIC MARKER	Mkr FO	
IRRIGATION PEDESTAL		
TELEPHONE MARKER	Mkr T	
TELEPHONE PEDESTAL		
TELEPHONE MANHOLE		
UTILITY POLE		
GUY ANCHOR		
GUY POLE		
MISC. UTILITIES		
VENT PIPE	VP	VP
TEST HOLE DESIGNATOR	THF FIRM/AGENCY	

LANDSCAPE LEGEND

	EXISTING	PROPOSED
TREE – CONIFEROUS		
TREE – DECIDUOUS		
SHRUB/BUSH		
SHRUBS AND BUSHES		
IRRIGATION BOX		
IRRIGATION SPRINKLER		
IRRIGATION VALVE		
BOLLARD		
FLAGPOLE	FP	

Know what's **below.**
Call before you dig.

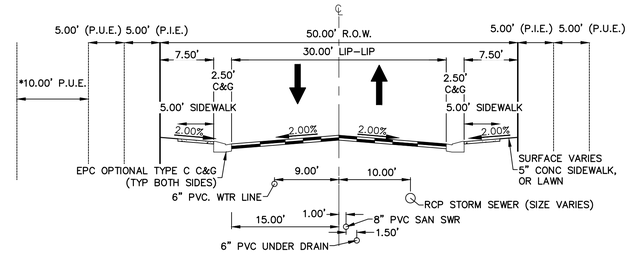

TYPICAL CROSS SECTION

N.T.S. (ALSIKE CLOVER CT, CRIMSON CLOVER DR, WHITE CLOVER DRIVE)
(PUBLIC ROAD, URBAN LOCAL, POSTED SPEED LIMIT = 25 MPH)
(*SEE PLAN VIEW FOR 10' PUE LOCATION)

NOTES

1. SEE SHEET 1 FOR BENCHMARK. SEE SHEET 2 FOR LEGEND.
2. ALL STATIONING IS PIPE CENTERLINE UNLESS OTHERWISE NOTED.
3. ALL RCP STORM SEWER SHALL BE CLASS III UNLESS OTHERWISE NOTED.
4. PIPE LENGTHS ARE FROM INSIDE INLET WALL TO INSIDE INLET WALL, FROM CENTER OF MANHOLE TO INSIDE INLET WALL, OR FROM CENTER OF MANHOLE TO CENTER OF MANHOLE. PIPE LENGTHS INCLUDE FES OR HEADWALL.
5. ALL MANHOLE COVERS SHALL BE ORIENTED TO AVOID CURB, GUTTER, SIDEWALK AND CROSSPANS UNLESS OTHERWISE NOTED.
6. ALL MANHOLES ARE EL PASO COUNTY TYPE II UNLESS OTHERWISE SPECIFIED.
7. ALL MANHOLES HAVE AN ECCENTRIC CONE UNLESS OTHERWISE SPECIFIED.
8. ALL ON-GRADE INLETS ARE TO MATCH TBC ELEVATIONS AT EACH END, FOLLOWING STREET GRADES. SEE ROADWAY PLANS FOR REQUIRED ELEVATIONS.
9. INLET STATIONING IS TO CENTER OF INLET.
10. PIPES SHALL HAVE JOINT RESTRAINTS ON LAST 3 JOINTS AT PIPE OUTFALL.
11. ALL CURVED PIPES SHALL BE BUILT IN ACCORDANCE WITH THE AMERICAN CONCRETE PIPE ASSOCIATION (ACPA) DESIGN DATA 21. PIPE MANUFACTURER TO BE USED MUST BE ABLE TO MEET LENGTH AND JOINT OPENING CRITERIA PER ACPA & ALL APPLICABLE EL PASO COUNTY CRITERIA AND STANDARDS.
12. PIPE BEDDING SHALL CONFORM TO EL PASO COUNTY CONSTRUCTION STANDARDS AND SPECIFICATIONS. BEDDING FOR RCP PIPE SHALL BE AG7122 NO. 57/67 CRUSHED ROCK. SQUEEGEE OR MIXTURES CONTAINING SQUEEGEE SHALL NOT BE USED. BEDDING SHALL BE SIX TO EIGHT INCHES DEEP UNDER THE PIPE AND BACKFILLED TO THE SPRING LINE.
13. ALL STORM SEWER PIPES, INLETS, MANHOLES, AND APPURTENANCES WITHIN THE R.O.W. ARE PUBLIC. STORM FACILITIES OUTSIDE OF THE PUBLIC R.O.W. ARE PRIVATE, UNLESS OTHERWISE NOTED.
14. WHERE PIPES ENTER STRUCTURES ON A SKEW, CONTRACTOR IS REQUIRED TO EXTEND PIPE TO ENSURE THAT BOTH EDGES OF THE PIPE EXTEND INTO THE STRUCTURE. CONTRACTOR WILL THEN BE REQUIRED TO CUT PIPE FLUSH WITH THE INSIDE FACE OF THE STRUCTURE AND GROUT IN PLACE. UNLESS OTHERWISE NOTED.
15. ALL MATERIALS AND INSTALLATION PROCEDURES SHALL BE IN COMPLIANCE WITH MANUFACTURERS SPECIFICATIONS AND EL PASO COUNTY STANDARDS AND SPECIFICATION.
16. SEE DETAIL SHEETS FOR APPLICABLE DETAILS.
17. ALL INLETS REQUIRE A CURB TYPE AND FL TRANSITION (LOCAL DEPRESSION) DETAILED PER CDOT (M-604-12) TYPE R INLET DETAIL. SEE JR ROADWAY PLAN SHEETS AND DETAIL SHEET.
18. PIPES WITH PRESSURE HEAD SHALL USE WATER TIGHT JOINTS WITH A 100-YEAR SERVICE LIFE.
19. CONTRACTOR TO SUBMIT SHOP DRAWINGS FOR ALL EL PASO COUNTY TYPE I MANHOLES PRIOR TO CONSTRUCTION OR ORDERING MATERIALS.

AS-BUILTS
05/24/2023
SF-21-023

EPC PCD 1/31/22

ENGINEER'S STATEMENT

THESE DETAILED PLANS AND SPECIFICATIONS WERE PREPARED UNDER MY DIRECT SUPERVISION. SAID PLANS AND SPECIFICATIONS HAVE BEEN PREPARED ACCORDING TO THE CRITERIA ESTABLISHED BY THE COUNTY FOR DETAILED ROADWAY, DRAINAGE, GRADING AND EROSION CONTROL PLANS AND SPECIFICATIONS, AND SAID PLANS AND SPECIFICATIONS ARE IN CONFORMITY WITH APPLICABLE MASTER DRAINAGE PLANS AND MASTER TRANSPORTATION PLANS. SAID PLAN AND SPECIFICATIONS MEET THE PURPOSES FOR WHICH THE PARTICULAR ROADWAY AND DRAINAGE FACILITIES ARE DESIGNED AND ARE CORRECT TO THE BEST OF MY KNOWLEDGE AND BELIEF. I ACCEPT RESPONSIBILITY FOR ANY LIABILITY CAUSED BY ANY NEGLIGENT ACTS, ERRORS OR OMISSIONS ON MY PART IN PREPARATION OF THESE DETAILED PLANS AND SPECIFICATIONS.

12/15/21

MIKE A. BRAMLETT, P.E. DATE
COLORADO P.E. 32314
FOR AND ON BEHALF OF JR ENGINEERING, LLC

UNTIL SUCH TIME AS THESE DRAWINGS ARE APPROVED BY THE APPROPRIATE REVIEWING AGENCIES, JR ENGINEERING APPROVES THEIR USE ONLY FOR THE PURPOSES DESIGNATED BY WRITTEN AUTHORIZATION.

PREPARED FOR
MONUMENT HILL CM LLC
1864 WOODMOOR DR, STE 100
COLORADO SPRINGS, CO 80920
ATTN: JOE DESJARDIN
(719) 476-0800
JDESJARDIN@PROTERRACO.COM

J·R ENGINEERING
A Westrian Company
Centennial 303-740-9393 • Colorado Springs 719-593-2593
Fort Collins 970-491-9888 • www.jrengineering.com

No.	REVISION	BY	DATE

H-SCALE	N/A
V-SCALE	N/A
DATE	12/15/21
DESIGNED BY	SAV
DRAWN BY	SAV
CHECKED BY	

CLOVERLEAF FILING 2

LEGEND

SHEET 2 OF 28

JOB NO. 25158.01

X:\2510000.all\2515801\Drawings\Sheet Dwgs\Cdv\2515801CV01.dwg, LG01, 12/15/2021 6:21:06 AM, CS

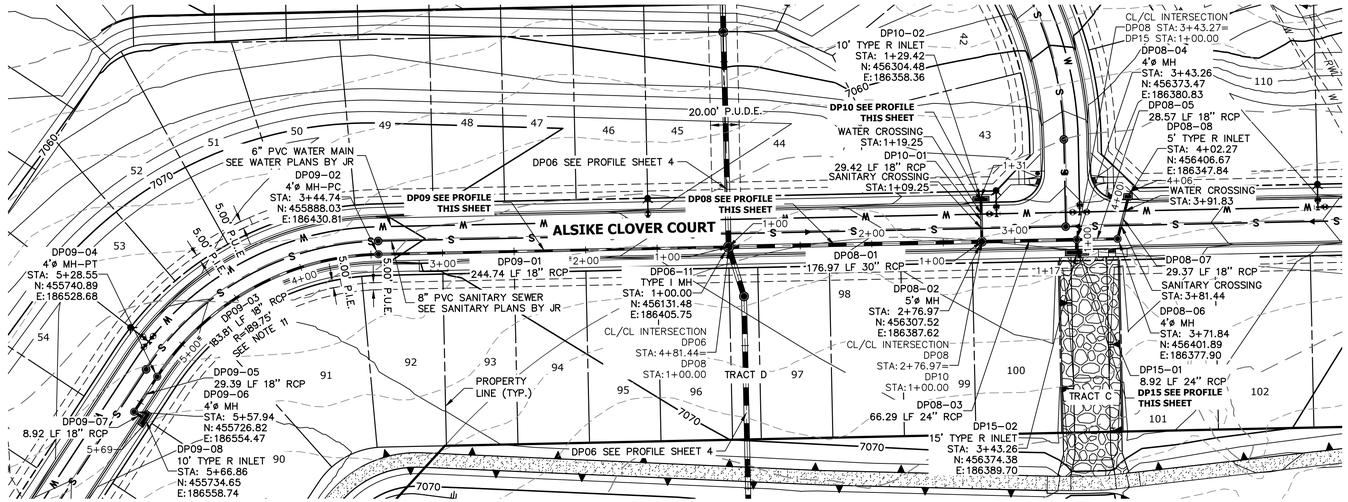

DP15 PROFILE
STA 1+00.00 TO 1+16.59

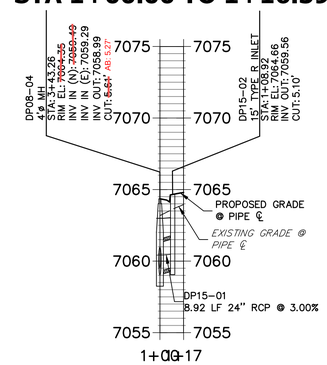

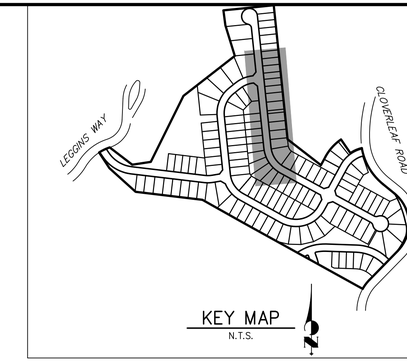

DP09 PROFILE
STA 1+00.00 TO 5+69.02

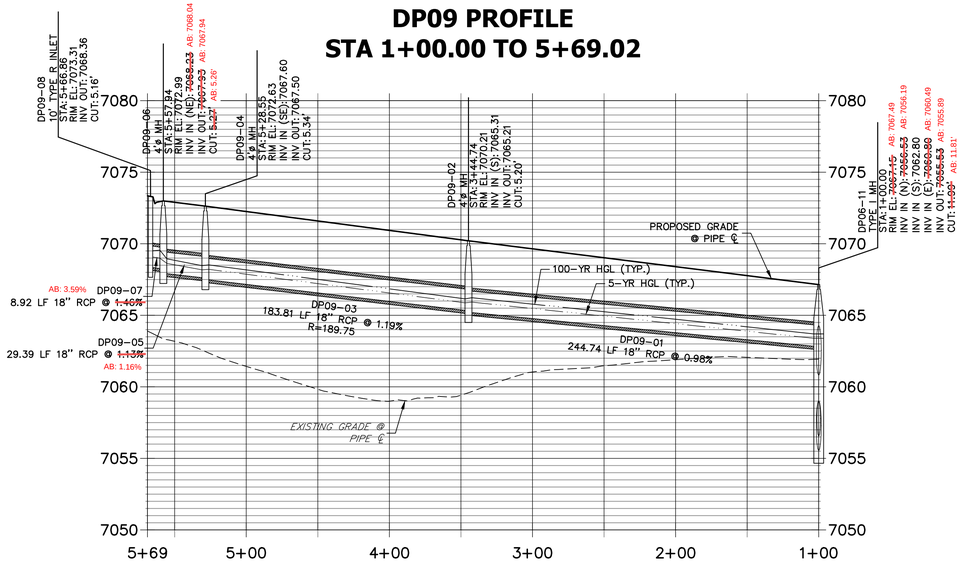

DP08 PROFILE
STA 1+00.00 TO 4+05.83

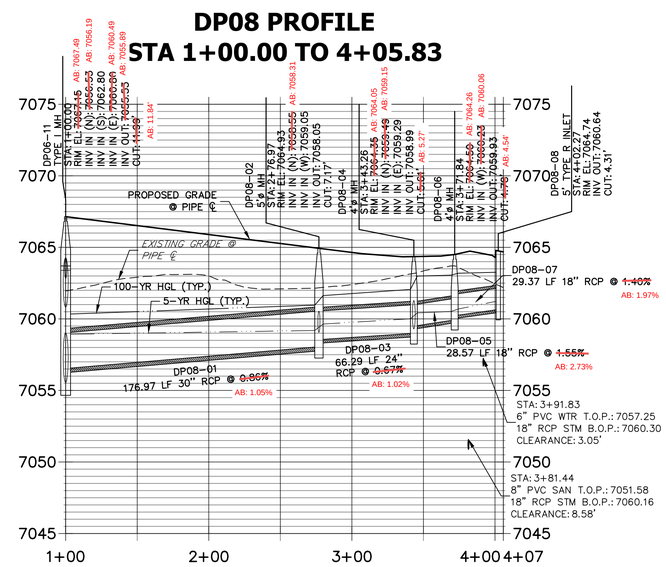

DP10 PROFILE
STA 1+00.00 TO 1+30.92

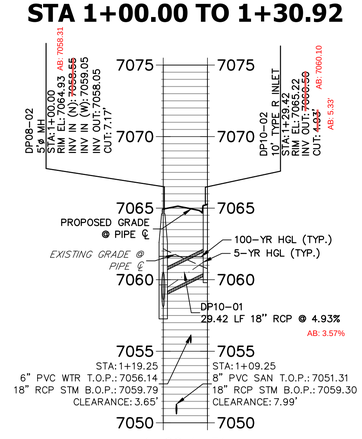

AS-BUILTS
05/24/2023
SF-21-023

50 25 0 50 100
HORIZONTAL
ORIGINAL SCALE: 1" = 50'
VERTICAL
ORIGINAL SCALE: 1" = 5'

NOTES

1. SEE SHEET 1 FOR BENCHMARK. SEE SHEET 2 FOR LEGEND.
2. ALL STATIONING IS PIPE CENTERLINE UNLESS OTHERWISE NOTED.
3. ALL RCP STORM SEWER SHALL BE CLASS III UNLESS OTHERWISE NOTED.
4. PIPE LENGTHS ARE FROM INSIDE INLET WALL TO INSIDE INLET WALL, FROM CENTER OF MANHOLE TO INSIDE INLET WALL, OR FROM CENTER OF MANHOLE TO CENTER OF MANHOLE. PIPE LENGTHS INCLUDE FES OR HEADWALL.
5. ALL MANHOLE COVERS SHALL BE ORIENTED TO AVOID CURB, GUTTER, SIDEWALK AND CROSSPANS UNLESS OTHERWISE NOTED.
6. ALL MANHOLES ARE EL PASO COUNTY TYPE II UNLESS OTHERWISE SPECIFIED.
7. ALL MANHOLES HAVE AN ECCENTRIC CONE UNLESS OTHERWISE SPECIFIED.
8. ALL ON-GRADE INLETS ARE TO MATCH TBC ELEVATIONS AT EACH END, FOLLOWING STREET GRADES. SEE ROADWAY PLANS FOR REQUIRED ELEVATIONS.
9. INLET STATIONING IS TO CENTER OF INLET.
10. PIPES SHALL HAVE JOINT RESTRAINTS ON LAST 3 JOINTS AT PIPE OUTFALL.
11. ALL CURVED PIPES SHALL BE BUILT IN ACCORDANCE WITH THE AMERICAN CONCRETE PIPE ASSOCIATION (ACPA) DESIGN DATA 21. PIPE MANUFACTURER TO BE USED MUST BE ABLE TO MEET LENGTH AND JOINT OPENING CRITERIA PER ACPA & ALL APPLICABLE EL PASO COUNTY CRITERIA AND STANDARDS.
12. PIPE BEDDING SHALL CONFORM TO EL PASO COUNTY CONSTRUCTION STANDARDS AND SPECIFICATIONS. BEDDING FOR RCP PIPE SHALL BE AG7122 NO. 57/67 CRUSHED ROCK. SQUEEGEE OR MIXTURES CONTAINING SQUEEGEE SHALL NOT BE USED. BEDDING SHALL BE SIX TO EIGHT INCHES DEEP UNDER THE PIPE AND BACKFILLED TO THE SPRING LINE.
13. ALL STORM SEWER PIPES, INLETS, MANHOLES, AND APPURTENANCES WITHIN THE R.O.W. ARE PUBLIC. STORM FACILITIES OUTSIDE OF THE PUBLIC R.O.W. ARE PRIVATE, UNLESS OTHERWISE NOTED.
14. WHERE PIPES ENTER STRUCTURES ON A SKEW, CONTRACTOR IS REQUIRED TO EXTEND PIPE TO ENSURE THAT BOTH EDGES OF THE PIPE EXTEND INTO THE STRUCTURE. CONTRACTOR WILL THEN BE REQUIRED TO CUT PIPE FLUSH WITH THE INSIDE FACE OF THE STRUCTURE AND GROUT IN PLACE. UNLESS OTHERWISE NOTED.
15. ALL MATERIALS AND INSTALLATION PROCEDURES SHALL BE IN COMPLIANCE WITH MANUFACTURERS SPECIFICATIONS AND EL PASO COUNTY STANDARDS AND SPECIFICATION.
16. SEE DETAIL SHEETS FOR APPLICABLE DETAILS.
17. ALL INLETS REQUIRE A CURB TYPE AND FL TRANSITION (LOCAL DEPRESSION) DETAILED PER CDOT (M-604-12) TYPE R INLET DETAIL. SEE JR ROADWAY PLAN SHEETS AND DETAIL SHEET.
18. PIPES WITH PRESSURE HEAD SHALL USE WATER TIGHT JOINTS WITH A 100-YEAR SERVICE LIFE.
19. CONTRACTOR TO SUBMIT SHOP DRAWINGS FOR ALL EL PASO COUNTY TYPE I MANHOLES PRIOR TO CONSTRUCTION OR ORDERING MATERIALS.

Know what's below. Call before you dig.

EPC PCD 1/31/22

ENGINEER'S STATEMENT

PREPARED UNDER MY DIRECT SUPERVISION AND ON BEHALF OF JR ENGINEERING

12/15/21

MIKE A. BRAMLETT, P.E.
COLORADO P.E. 32314
FOR AND ON BEHALF OF JR ENGINEERING, LLC

DATE

UNTIL SUCH TIME AS THESE PLANS ARE APPROVED BY THE APPROPRIATE REVIEWING AGENCIES, JR ENGINEERING APPROVES THEIR USE ONLY FOR THE PURPOSES DESIGNATED BY WRITTEN AUTHORIZATION.

PREPARED FOR
MONUMENT HILL CM LLC
1864 WOODMOOR DR, STE 100
COLORADO SPRINGS, CO 80920
ATTN: JOE DESJARDIN
(719) 476-0800
JDESJARDIN@PROTERRACO.COM

J·R ENGINEERING
A Westrian Company
Centennial 303-740-9393 • Colorado Springs 719-593-2593
Fort Collins 970-491-9888 • www.jrengineering.com

No.	REVISION	BY	DATE

H-SCALE	1"=50'
V-SCALE	1"=5'
DATE	12/15/21
DESIGNED BY	APL
DRAWN BY	APL
CHECKED BY	

CLOVERLEAF FILING 2

STORM SEWER PLAN AND PROFILE

SHEET 3 OF 28

JOB NO. 25158.01

X:\2510000.all\2515801\Drawings\Sheet Dwgs\CD\r2515801DP01.dwg, DP01, 12/15/2021 8:32:35 AM, CS

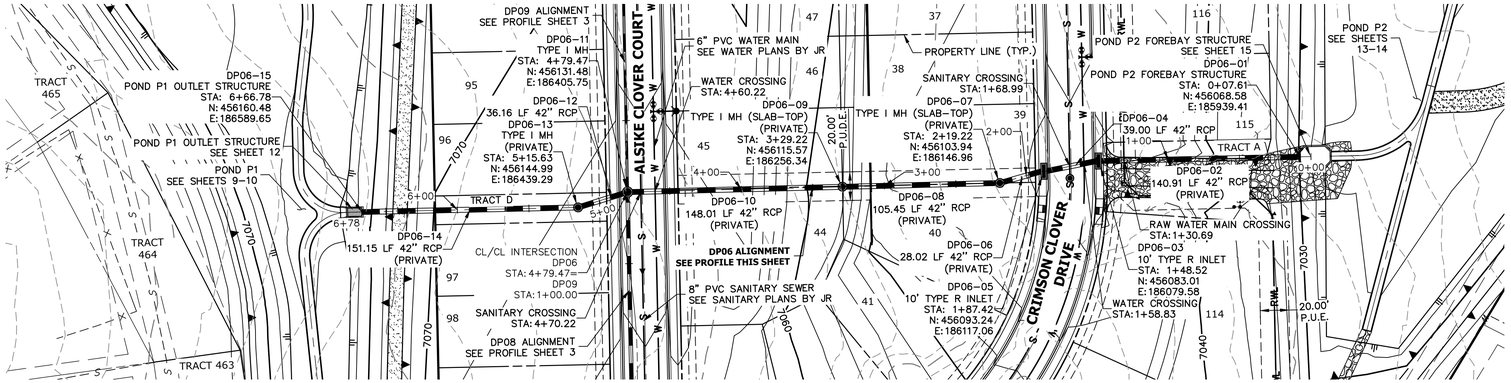

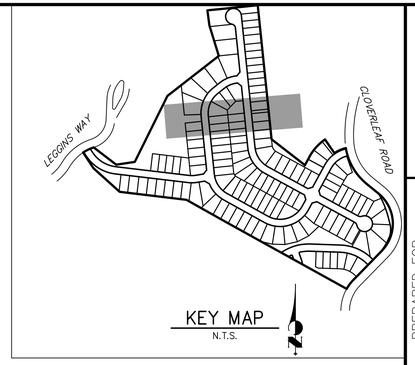

Know what's **below.**
Call before you dig.

DP06 PROFILE
STA 0+00.00 TO 6+77.61

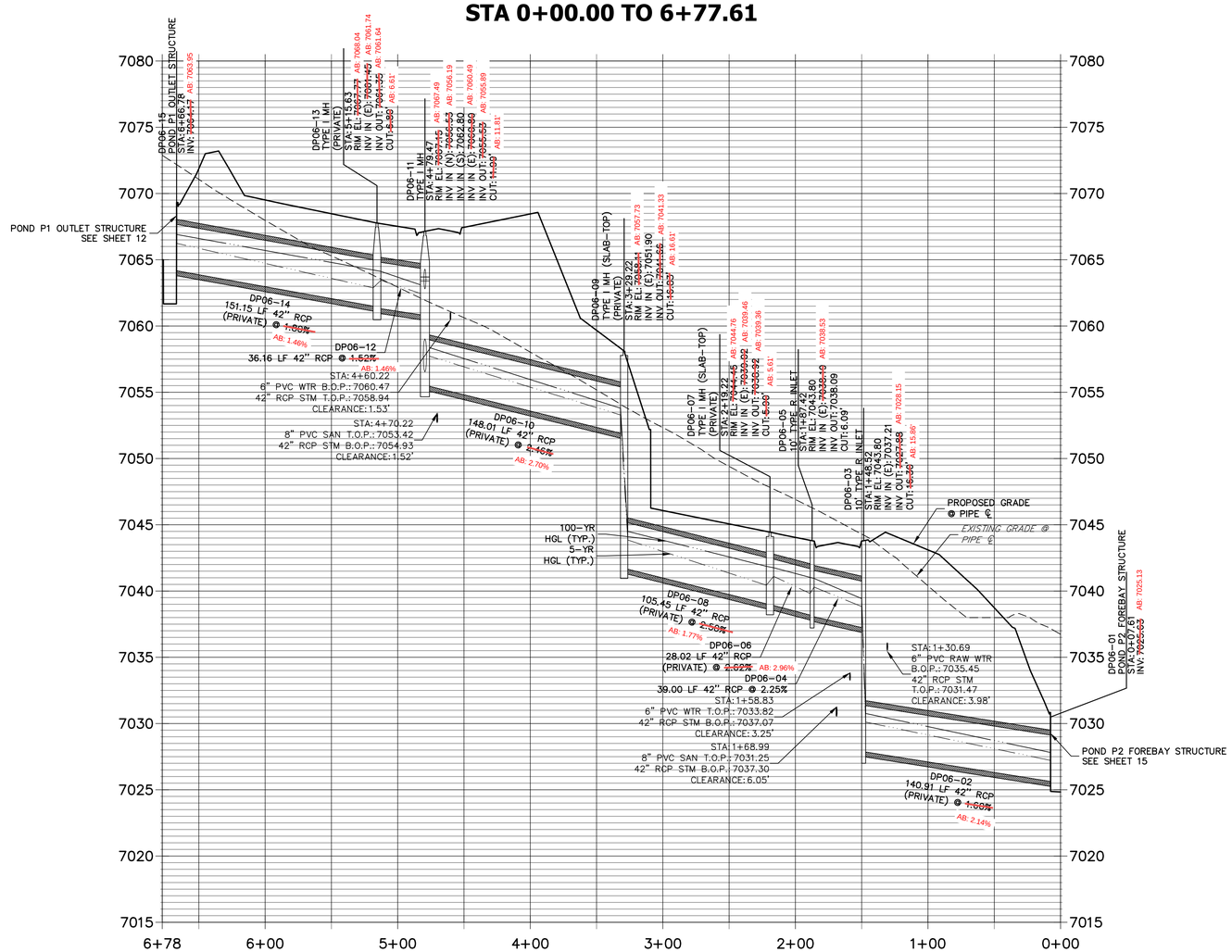

AS-BUILTS
05/24/2023
SF-21-023

Mike Bramlett
32314
REGISTERED PROFESSIONAL ENGINEER

50 25 0 50 100
HORIZONTAL
ORIGINAL SCALE: 1" = 50'
VERTICAL
ORIGINAL SCALE: 1" = 5'

NOTES

1. SEE SHEET 1 FOR BENCHMARK. SEE SHEET 2 FOR LEGEND.
2. ALL STATIONING IS PIPE CENTERLINE UNLESS OTHERWISE NOTED.
3. ALL RCP STORM SEWER SHALL BE CLASS III UNLESS OTHERWISE NOTED.
4. PIPE LENGTHS ARE FROM INSIDE INLET WALL TO INSIDE INLET WALL, FROM CENTER OF MANHOLE TO INSIDE INLET WALL, OR FROM CENTER OF MANHOLE TO CENTER OF MANHOLE. PIPE LENGTHS INCLUDE FES OR HEADWALL.
5. ALL MANHOLE COVERS SHALL BE ORIENTED TO AVOID CURB, GUTTER, SIDEWALK AND CROSSPANS UNLESS OTHERWISE NOTED.
6. ALL MANHOLES ARE EL PASO COUNTY TYPE II UNLESS OTHERWISE SPECIFIED.
7. ALL MANHOLES HAVE AN ECCENTRIC CONE UNLESS OTHERWISE SPECIFIED.
8. ALL ON-GRADE INLETS ARE TO MATCH TBC ELEVATIONS AT EACH END, FOLLOWING STREET GRADES. SEE ROADWAY PLANS FOR REQUIRED ELEVATIONS.
9. INLET STATIONING IS TO CENTER OF INLET.
10. PIPES SHALL HAVE JOINT RESTRAINTS ON LAST 3 JOINTS AT PIPE OUTFALL.
11. ALL CURVED PIPES SHALL BE BUILT IN ACCORDANCE WITH THE AMERICAN CONCRETE PIPE ASSOCIATION (ACPA) DESIGN DATA 21. PIPE MANUFACTURER TO BE USED MUST BE ABLE TO MEET LENGTH AND JOINT OPENING CRITERIA PER ACPA & ALL APPLICABLE EL PASO COUNTY CRITERIA AND STANDARDS.
12. PIPE BEDDING SHALL CONFORM TO EL PASO COUNTY CONSTRUCTION STANDARDS AND SPECIFICATIONS. BEDDING FOR RCP PIPE SHALL BE AG7122 NO. 57/67 CRUSHED ROCK. SQUEEGEE OR MIXTURES CONTAINING SQUEEGEE SHALL NOT BE USED. BEDDING SHALL BE SIX TO EIGHT INCHES DEEP UNDER THE PIPE AND BACKFILLED TO THE SPRING LINE.
13. ALL STORM SEWER PIPES, INLETS, MANHOLES, AND APPURTENANCES WITHIN THE R.O.W. ARE PUBLIC. STORM FACILITIES OUTSIDE OF THE PUBLIC R.O.W. ARE PRIVATE, UNLESS OTHERWISE NOTED.
14. WHERE PIPES ENTER STRUCTURES ON A SKEW, CONTRACTOR IS REQUIRED TO EXTEND PIPE TO ENSURE THAT BOTH EDGES OF THE PIPE EXTEND INTO THE STRUCTURE. CONTRACTOR WILL THEN BE REQUIRED TO CUT PIPE FLUSH WITH THE INSIDE FACE OF THE STRUCTURE AND GROUT IN PLACE. UNLESS OTHERWISE NOTED.
15. ALL MATERIALS AND INSTALLATION PROCEDURES SHALL BE IN COMPLIANCE WITH MANUFACTURERS SPECIFICATIONS AND EL PASO COUNTY STANDARDS AND SPECIFICATION.
16. SEE DETAIL SHEETS FOR APPLICABLE DETAILS.
17. ALL INLETS REQUIRE A CURB TYPE AND FL TRANSITION (LOCAL DEPRESSION) DETAILED PER CDOT (M-604-12) TYPE R INLET DETAIL. SEE JR ROADWAY PLAN SHEETS AND DETAIL SHEET.
18. PIPES WITH PRESSURE HEAD SHALL USE WATER TIGHT JOINTS WITH A 100-YEAR SERVICE LIFE.
19. CONTRACTOR TO SUBMIT SHOP DRAWINGS FOR ALL EL PASO COUNTY TYPE I MANHOLES PRIOR TO CONSTRUCTION OR ORDERING MATERIALS.

EPC PCD 1/31/22

ENGINEER'S STATEMENT

PREPARED UNDER MY DIRECT SUPERVISION AND ON BEHALF OF JR ENGINEERING

Mike Bramlett 2/15/21

MIKE A. BRAMLETT, P.E. DATE
COLORADO P.E. 32314
FOR AND ON BEHALF OF JR ENGINEERING, LLC

COLORADO REGISTERED PROFESSIONAL ENGINEER MIKE A. BRAMLETT 32314

UNTIL SUCH TIME AS THESE PLANS ARE APPROVED BY THE APPROPRIATE REVIEWING AGENCIES, JR ENGINEERING APPROVES THEIR USE ONLY FOR THE PURPOSES DESIGNATED BY WRITTEN AUTHORIZATION.

PREPARED FOR
MONUMENT HILL CM LLC
1864 WOODMOOR DR, STE 100
COLORADO SPRINGS, CO 80920
ATTN: JOE DESJARDIN
(719) 476-0800
JDESJARDIN@PROTERRACO.COM

J·R ENGINEERING
A Westrian Company
Centennial 303-740-9393 • Colorado Springs 719-593-2593
Fort Collins 970-491-9888 • www.jrengineering.com

No.	REVISION	BY	DATE

H-SCALE	1"=50'
V-SCALE	1"=5'
DATE	12/15/21
DESIGNED BY	APL
DRAWN BY	APL
CHECKED BY	

CLOVERLEAF FILING 2
STORM SEWER PLAN AND PROFILE

SHEET 4 OF 28
JOB NO. 25158.01

X:\2515000.all\2515801\Drawings\Sheet Dwgs\CDs\2515801DP01.dwg, DP02, 12/15/2021 8:53:20 AM, CS

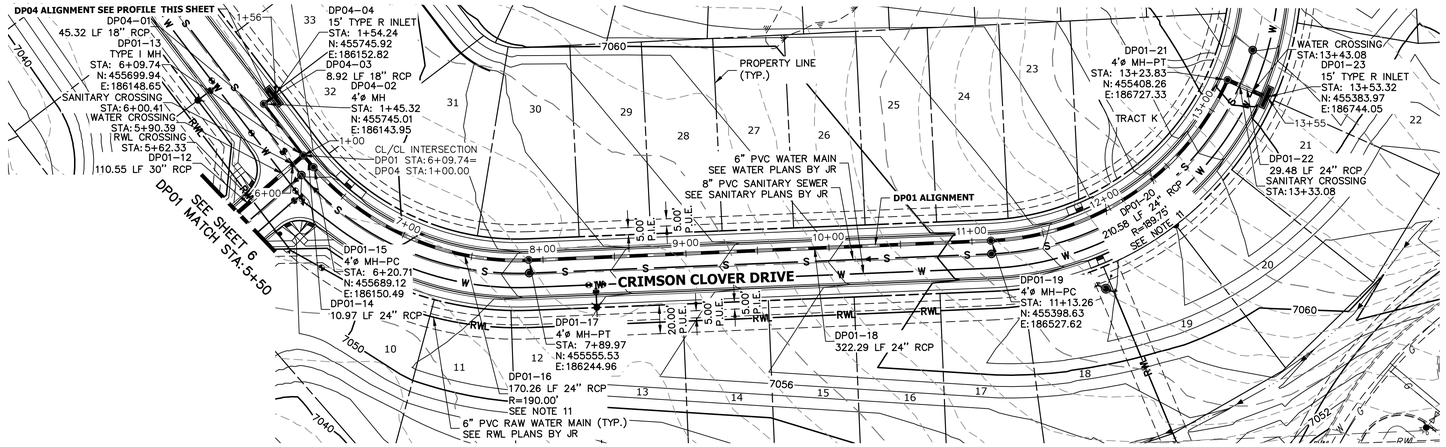

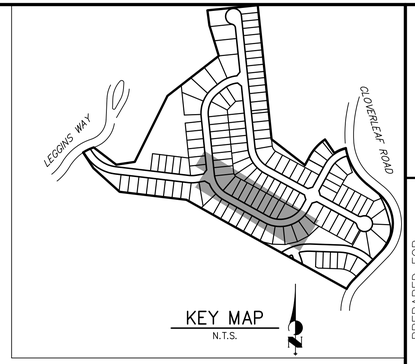

DP04 PROFILE
STA 1+00.00 TO 1+55.74

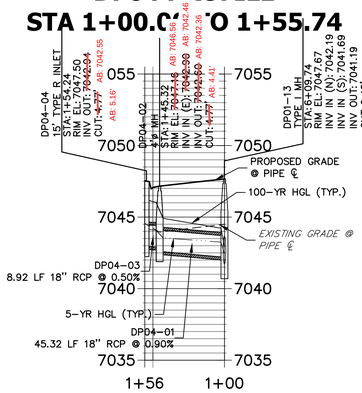

DP01 PROFILE
STA 5+50.00 TO 13+56.98

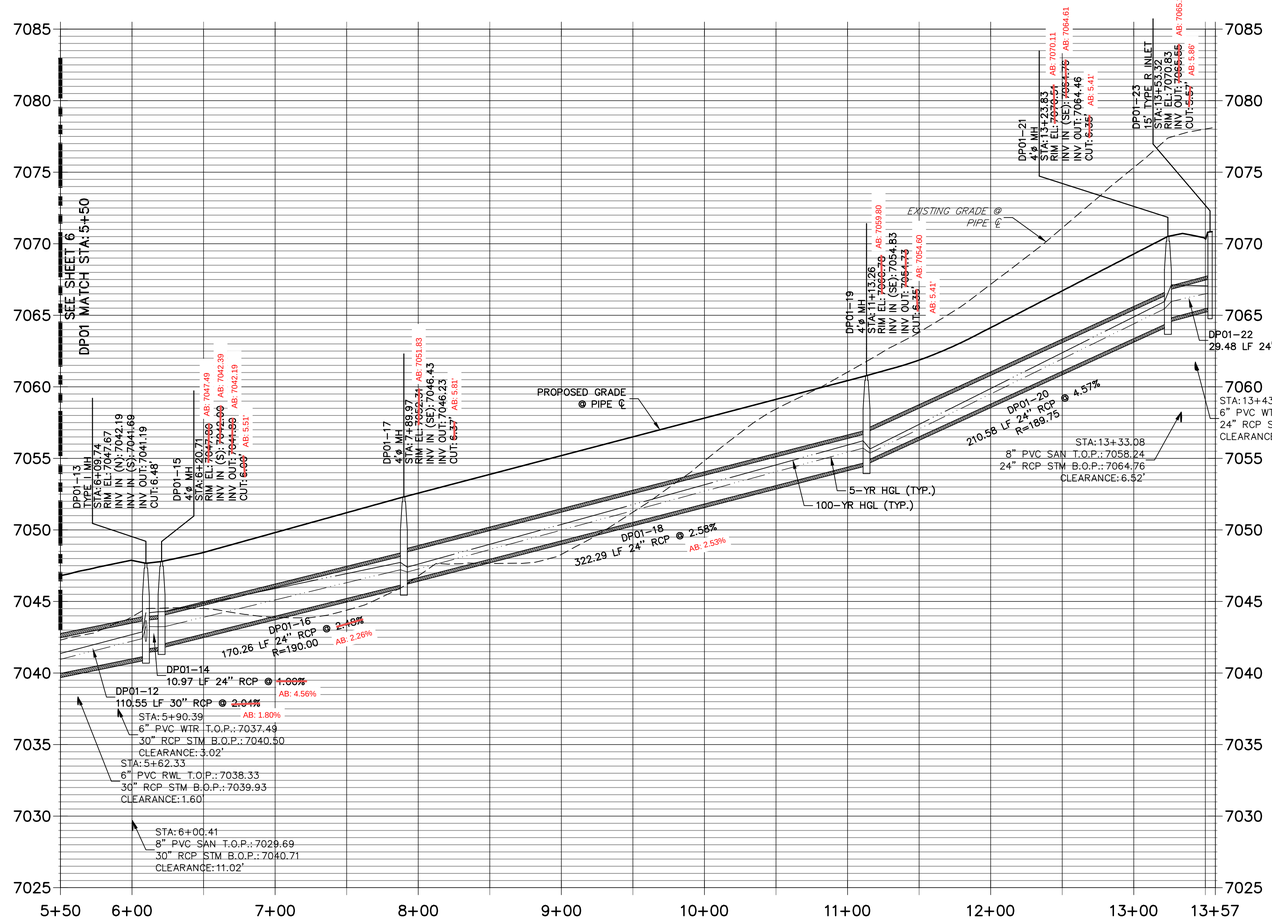

NOTES

1. SEE SHEET 1 FOR BENCHMARK. SEE SHEET 2 FOR LEGEND.
2. ALL STATIONING IS PIPE CENTERLINE UNLESS OTHERWISE NOTED.
3. ALL RCP STORM SEWER SHALL BE CLASS III UNLESS OTHERWISE NOTED.
4. PIPE LENGTHS ARE FROM INSIDE INLET WALL TO INSIDE INLET WALL, FROM CENTER OF MANHOLE TO INSIDE INLET WALL, OR FROM CENTER OF MANHOLE TO CENTER OF MANHOLE. PIPE LENGTHS INCLUDE FES OR HEADWALL.
5. ALL MANHOLE COVERS SHALL BE ORIENTED TO AVOID CURB, GUTTER, SIDEWALK AND CROSSPANS UNLESS OTHERWISE NOTED.
6. ALL MANHOLES ARE EL PASO COUNTY TYPE II UNLESS OTHERWISE SPECIFIED.
7. ALL MANHOLES HAVE AN ECCENTRIC CONE UNLESS OTHERWISE SPECIFIED.
8. ALL ON-GRADE INLETS ARE TO MATCH TBC ELEVATIONS AT EACH END, FOLLOWING STREET GRADES. SEE ROADWAY PLANS FOR REQUIRED ELEVATIONS.
9. INLET STATIONING IS TO CENTER OF INLET.
10. PIPES SHALL HAVE JOINT RESTRAINTS ON LAST 3 JOINTS AT PIPE OUTFALL.
11. ALL CURVED PIPES SHALL BE BUILT IN ACCORDANCE WITH THE AMERICAN CONCRETE PIPE ASSOCIATION (ACPA) DESIGN DATA 21. PIPE MANUFACTURER TO BE USED MUST BE ABLE TO MEET LENGTH AND JOINT OPENING CRITERIA PER ACPA & ALL APPLICABLE EL PASO COUNTY CRITERIA AND STANDARDS.
12. PIPE BEDDING SHALL CONFORM TO EL PASO COUNTY CONSTRUCTION STANDARDS AND SPECIFICATIONS. BEDDING FOR RCP PIPE SHALL BE AG7122 NO. 57/67 CRUSHED ROCK. SQUEEGEE OR MIXTURES CONTAINING SQUEEGEE SHALL NOT BE USED. BEDDING SHALL BE SIX TO EIGHT INCHES DEEP UNDER THE PIPE AND BACKFILLED TO THE SPRING LINE.
13. ALL STORM SEWER PIPES, INLETS, MANHOLES, AND APPURTENANCES WITHIN THE R.O.W. ARE PUBLIC. STORM FACILITIES OUTSIDE OF THE PUBLIC R.O.W. ARE PRIVATE, UNLESS OTHERWISE NOTED.
14. WHERE PIPES ENTER STRUCTURES ON A SKEW, CONTRACTOR IS REQUIRED TO EXTEND PIPE TO ENSURE THAT BOTH EDGES OF THE PIPE EXTEND INTO THE STRUCTURE. CONTRACTOR WILL THEN BE REQUIRED TO CUT PIPE FLUSH WITH THE INSIDE FACE OF THE STRUCTURE AND GROUT IN PLACE. UNLESS OTHERWISE NOTED.
15. ALL MATERIALS AND INSTALLATION PROCEDURES SHALL BE IN COMPLIANCE WITH MANUFACTURERS SPECIFICATIONS AND EL PASO COUNTY STANDARDS AND SPECIFICATION.
16. SEE DETAIL SHEETS FOR APPLICABLE DETAILS.
17. ALL INLETS REQUIRE A CURB TYPE AND FL TRANSITION (LOCAL DEPRESSION) DETAILED PER CDOT (M-604-12) TYPE R INLET DETAIL. SEE JR ROADWAY PLAN SHEETS AND DETAIL SHEET.
18. PIPES WITH PRESSURE HEAD SHALL USE WATER TIGHT JOINTS WITH A 100-YEAR SERVICE LIFE.
19. CONTRACTOR TO SUBMIT SHOP DRAWINGS FOR ALL EL PASO COUNTY TYPE I MANHOLES PRIOR TO CONSTRUCTION OR ORDERING MATERIALS.

AS-BUILTS
05/24/2023
SF-21-023

EPC PCD 1/31/22

HORIZONTAL
ORIGINAL SCALE: 1" = 50'
VERTICAL
ORIGINAL SCALE: 1" = 5'

ENGINEER'S STATEMENT

PREPARED UNDER MY DIRECT SUPERVISION AND ON BEHALF OF JR ENGINEERING

MIKE A. BRAMLETT, P.E.
COLORADO P.E. 32314
FOR AND ON BEHALF OF JR ENGINEERING, LLC

DATE 12/15/21

Know what's below. Call before you dig.

UNTIL SUCH TIME AS THESE DRAWINGS ARE APPROVED BY THE APPROPRIATE REVIEWING AGENCIES, JR ENGINEERING APPROVES THEIR USE ONLY FOR THE PURPOSES DESIGNATED BY WRITTEN AUTHORIZATION.

PREPARED FOR
MONUMENT HILL CM LLC
1864 WOODMOOR DR, STE 100
COLORADO SPRINGS, CO 80920
ATTN: JOE DESJARDIN
(719) 476-0800
JDESJARDIN@PROTERRACO.COM

J·R ENGINEERING
A Westrian Company
Centennial 303-740-9393 • Colorado Springs 719-593-2593
Fort Collins 970-491-9888 • www.jrengineering.com

No.	REVISION	BY	DATE

H-SCALE	1"=50'
V-SCALE	1"=5'
DATE	12/15/21
DESIGNED BY	APL
DRAWN BY	APL
CHECKED BY	

CLOVERLEAF FILING 2

STORM SEWER PLAN AND PROFILE

SHEET 5 OF 28

JOB NO. 25158.01

X:\2510000.all\2515801\Drawings\Sheet Dwgs\Cds\2515801DP01.dwg, DP03, 12/15/2021 8:54:07 AM, CS

DP02 PROFILE
STA 1+00.00 TO 1+31.83

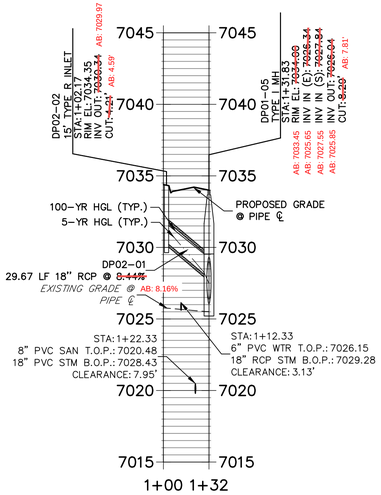

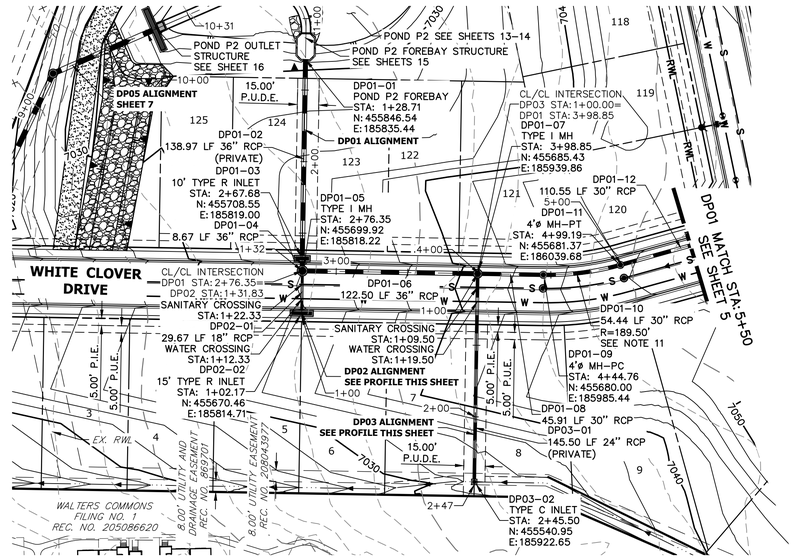

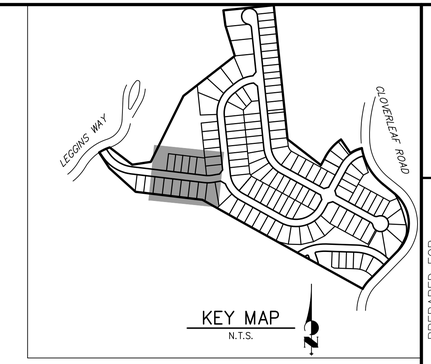

UNTIL SUCH TIME AS THESE DRAWINGS ARE APPROVED BY THE APPROPRIATE REVIEWING AGENCIES, JR ENGINEERING APPROVES THEIR USE ONLY FOR THE PURPOSES DESIGNATED BY WRITTEN AUTHORIZATION.

PREPARED FOR
MONUMENT HILL CM LLC
1864 WOODMOOR DR, STE 100
COLORADO SPRINGS, CO 80920
ATTN: JOE DESJARDIN
(719) 476-0800
JDESJARDIN@PROTERRACO.COM

J·R ENGINEERING
A Westrian Company
Centennial 303-740-9393 • Colorado Springs 719-593-2593
Fort Collins 970-491-9888 • www.jrengineering.com

NOTES

1. SEE SHEET 1 FOR BENCHMARK. SEE SHEET 2 FOR LEGEND.
2. ALL STATIONING IS PIPE CENTERLINE UNLESS OTHERWISE NOTED.
3. ALL RCP STORM SEWER SHALL BE CLASS III UNLESS OTHERWISE NOTED.
4. PIPE LENGTHS ARE FROM INSIDE INLET WALL TO INSIDE INLET WALL, FROM CENTER OF MANHOLE TO INSIDE INLET WALL, OR FROM CENTER OF MANHOLE TO CENTER OF MANHOLE. PIPE LENGTHS INCLUDE FES OR HEADWALL.
5. ALL MANHOLE COVERS SHALL BE ORIENTED TO AVOID CURB, GUTTER, SIDEWALK AND CROSSPANS UNLESS OTHERWISE NOTED.
6. ALL MANHOLES ARE EL PASO COUNTY TYPE II UNLESS OTHERWISE SPECIFIED.
7. ALL MANHOLES HAVE AN ECCENTRIC CONE UNLESS OTHERWISE SPECIFIED.
8. ALL ON-GRADE INLETS ARE TO MATCH TBC ELEVATIONS AT EACH END, FOLLOWING STREET GRADES. SEE ROADWAY PLANS FOR REQUIRED ELEVATIONS.
9. INLET STATIONING IS TO CENTER OF INLET.
10. PIPES SHALL HAVE JOINT RESTRAINTS ON LAST 3 JOINTS AT PIPE OUTFALL.
11. ALL CURVED PIPES SHALL BE BUILT IN ACCORDANCE WITH THE AMERICAN CONCRETE PIPE ASSOCIATION (ACPA) DESIGN DATA 21. PIPE MANUFACTURER TO BE USED MUST BE ABLE TO MEET LENGTH AND JOINT OPENING CRITERIA PER ACPA & ALL APPLICABLE EL PASO COUNTY CRITERIA AND STANDARDS.
12. PIPE BEDDING SHALL CONFORM TO EL PASO COUNTY CONSTRUCTION STANDARDS AND SPECIFICATIONS. BEDDING FOR RCP PIPE SHALL BE AG7122 NO. 57/67 CRUSHED ROCK. SQUEEGEE OR MIXTURES CONTAINING SQUEEGEE SHALL NOT BE USED. BEDDING SHALL BE SIX TO EIGHT INCHES DEEP UNDER THE PIPE AND BACKFILLED TO THE SPRING LINE.
13. ALL STORM SEWER PIPES, INLETS, MANHOLES, AND APPURTENANCES WITHIN THE R.O.W. ARE PUBLIC. STORM FACILITIES OUTSIDE OF THE PUBLIC R.O.W. ARE PRIVATE, UNLESS OTHERWISE NOTED.
14. WHERE PIPES ENTER STRUCTURES ON A SKEW, CONTRACTOR IS REQUIRED TO EXTEND PIPE TO ENSURE THAT BOTH EDGES OF THE PIPE EXTEND INTO THE STRUCTURE. CONTRACTOR WILL THEN BE REQUIRED TO CUT PIPE FLUSH WITH THE INSIDE FACE OF THE STRUCTURE AND GROUT IN PLACE. UNLESS OTHERWISE NOTED.
15. ALL MATERIALS AND INSTALLATION PROCEDURES SHALL BE IN COMPLIANCE WITH MANUFACTURERS SPECIFICATIONS AND EL PASO COUNTY STANDARDS AND SPECIFICATION.
16. SEE DETAIL SHEETS FOR APPLICABLE DETAILS.
17. ALL INLETS REQUIRE A CURB TYPE AND FL TRANSITION (LOCAL DEPRESSION) DETAILED PER CDOT (M-604-12) TYPE R INLET DETAIL. SEE JR ROADWAY PLAN SHEETS AND DETAIL SHEET.
18. PIPES WITH PRESSURE HEAD SHALL USE WATER TIGHT JOINTS WITH A 100-YEAR SERVICE LIFE.
19. CONTRACTOR TO SUBMIT SHOP DRAWINGS FOR ALL EL PASO COUNTY TYPE I MANHOLES PRIOR TO CONSTRUCTION OR ORDERING MATERIALS.

DP01 PROFILE (1)
STA 1+00.00 TO 5+50.00

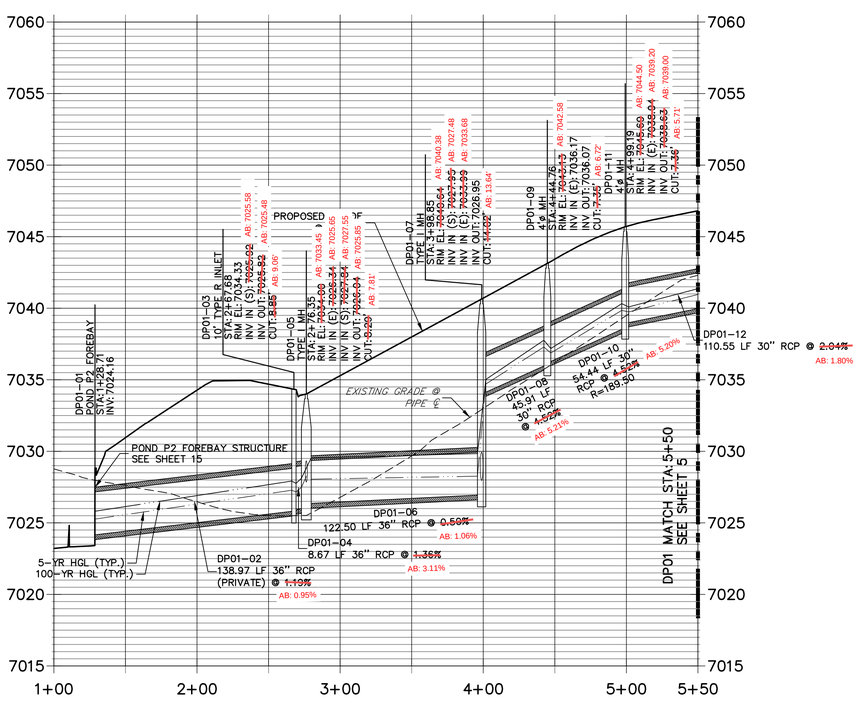

DP03 PROFILE
STA 1+00.00 TO 2+47.46

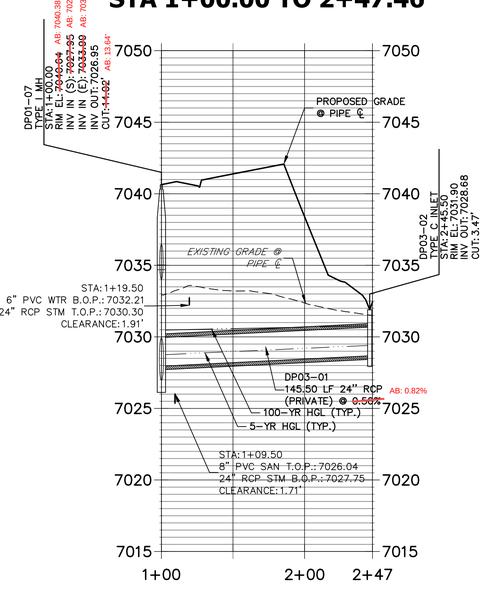

AS-BUILTS
05/24/2023
SF-21-023

EPC PCD 1/31/22

50 25 0 50 100
HORIZONTAL
ORIGINAL SCALE: 1" = 50'
VERTICAL
ORIGINAL SCALE: 1" = 5'

ENGINEER'S STATEMENT

PREPARED UNDER MY DIRECT SUPERVISION AND ON BEHALF OF JR ENGINEERING

MIKE A. BRAMLETT, P.E.
COLORADO P.E. 32314
FOR AND ON BEHALF OF JR ENGINEERING, LLC

DATE 2/15/21

Know what's below. Call before you dig.

No.	REVISION	BY	DATE

H-SCALE	1"=50'
V-SCALE	1"=5'
DATE	12/15/21
DESIGNED BY	APL
DRAWN BY	APL
CHECKED BY	

CLOVERLEAF FILING 2
STORM SEWER PLAN AND PROFILE

SHEET 6 OF 28
JOB NO. 25158.01

X:\2510000.all\2515801\Drawings\Sheet Dwgs\Ch2\2515801DP01.dwg, DP04, 12/15/2021 8:55:03 AM, CS

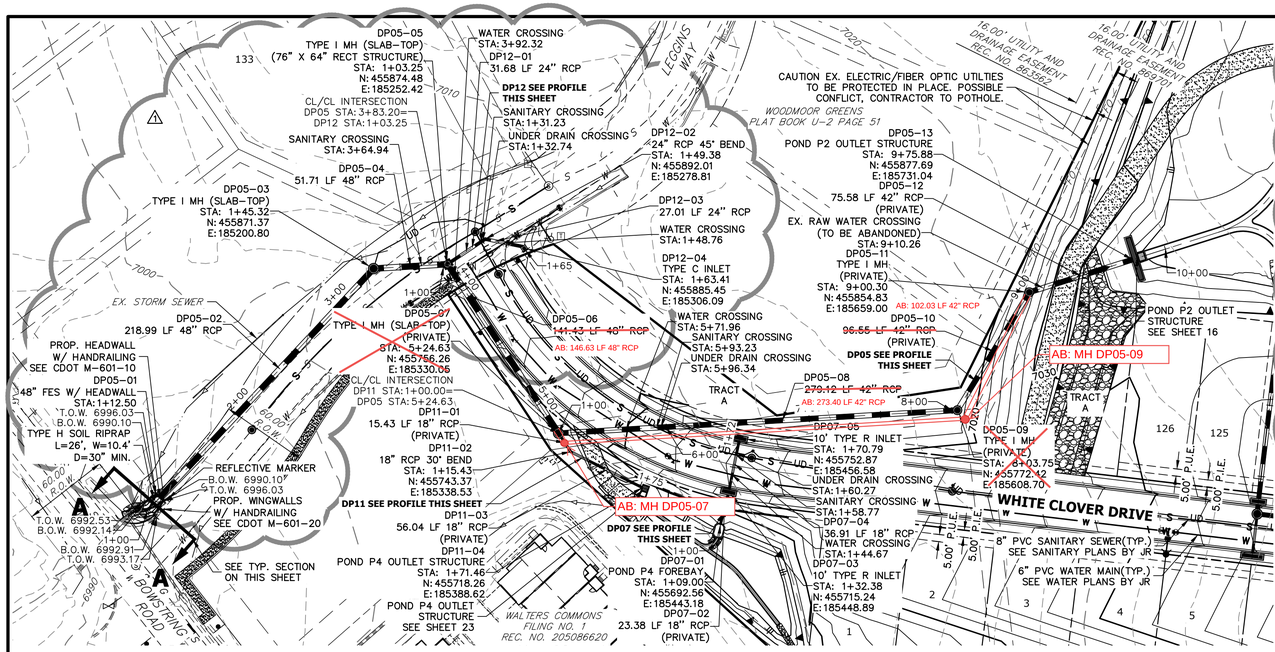

DP05 PROFILE
STA 1+00.00 TO 10+03.11

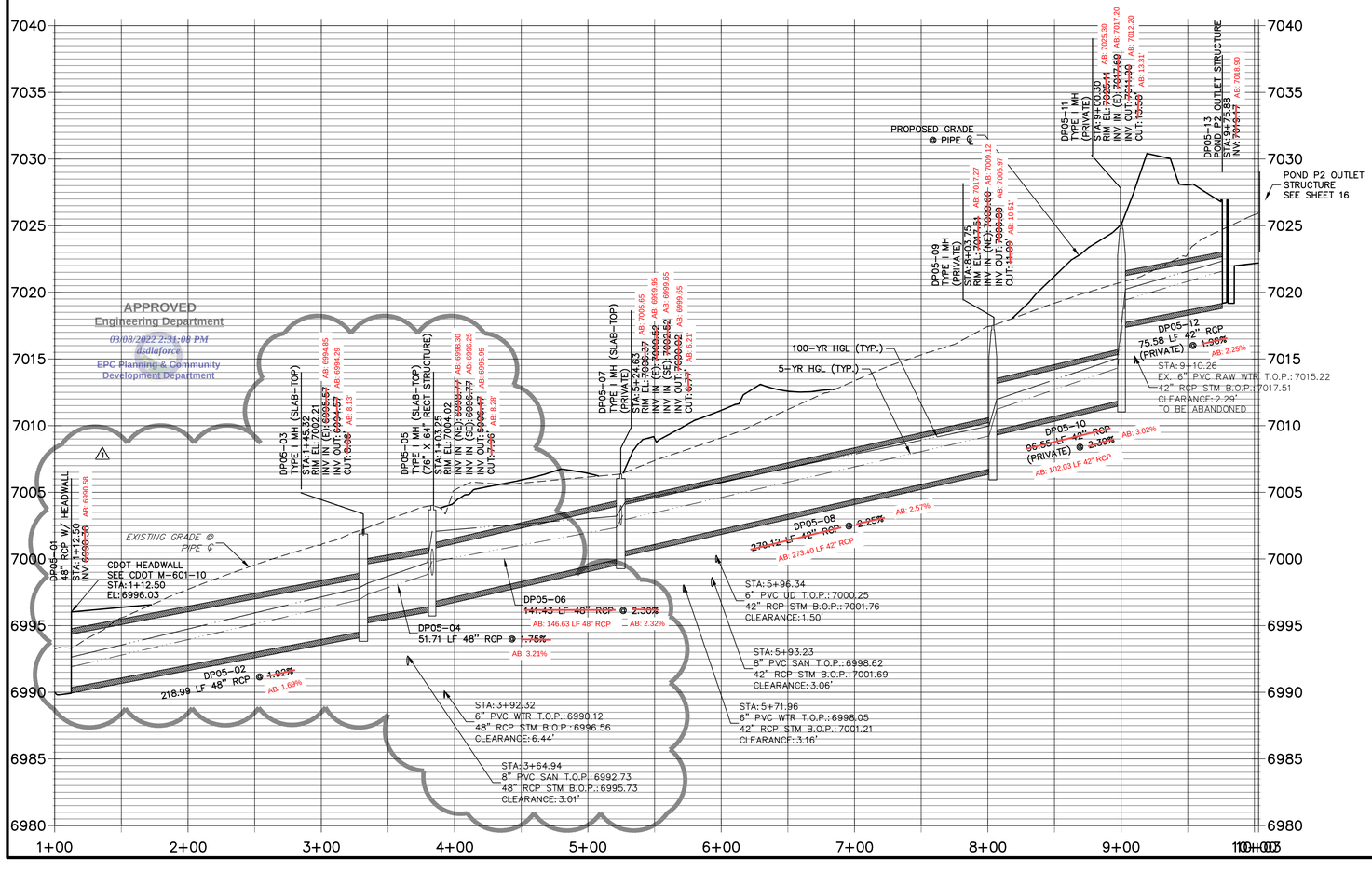

DP12 PROFILE
STA 1+00.00 TO 1+64.87

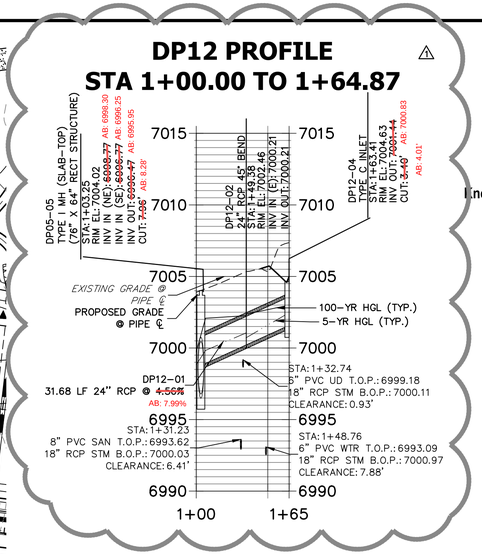

811
Know what's below.
Call before you dig.

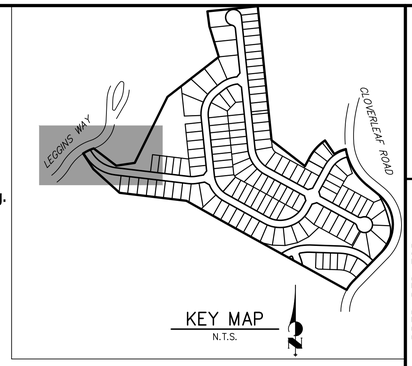

DP07 PROFILE
STA 1+00.00 TO 1+72.29

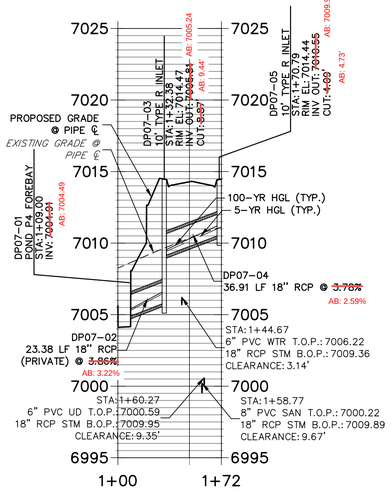

DP11 PROFILE
STA 1+00.00 TO 1+75.46

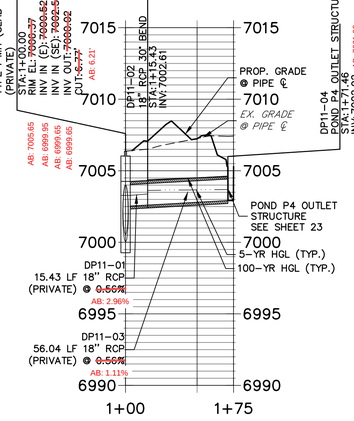

NOTES

1. SEE SHEET 1 FOR BENCHMARK. SEE SHEET 2 FOR LEGEND.
2. SEE SHEET 2 FOR ADDITIONAL NOTES.

AS-BUILTS
05/24/2023
SF-21-023

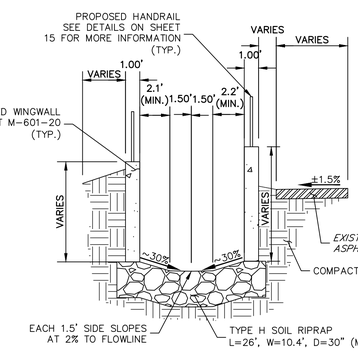

OUTFALL WINGWALL AND
SWALE SECTION A-A
SCALE: 1"=5'

HORIZONTAL
ORIGINAL SCALE: 1" = 50'
VERTICAL
ORIGINAL SCALE: 1" = 5'

ENGINEER'S STATEMENT

PREPARED UNDER MY DIRECT SUPERVISION AND ON BEHALF OF JR ENGINEERING

MIKE A. BRAMLETT, P.E.
COLORADO P.E. 32314
FOR AND ON BEHALF OF JR ENGINEERING, LLC

03-08-22
DATE

UNTIL SUCH TIME AS THESE PLANS ARE APPROVED BY THE APPROPRIATE REVIEWING AGENCIES, JR ENGINEERING APPROVES THEIR USE ONLY FOR THE PURPOSES DESIGNATED BY WRITTEN AUTHORIZATION.

PREPARED FOR
MONUMENT HILL CM LLC
1864 WOODMOOR DR, STE 100
COLORADO SPRINGS, CO 80920
ATTN: JOE DESJARDIN
(719) 476-0800
JDESJARDIN@PROTERRACO.COM

J·R ENGINEERING
A Westrian Company
Centennial 303-740-9393 • Colorado Springs 719-593-2593
Fort Collins 970-491-9888 • www.jrengineering.com

No.	REVISION	BY	DATE
1	STORM ALIGNMENT/GRADE PER POTHOLING	REB	03-08-22

H-SCALE	1"=50'
V-SCALE	1"=5'
DATE	03-04-22
DESIGNED BY	APL
DRAWN BY	APL
CHECKED BY	

CLOVERLEAF FILING 2
STORM SEWER PLAN AND PROFILE

SHEET 7 OF 28
JOB NO. 25158.01

X:\2510000.all\25158\01\Drawings\Sheet Dwgs\CDs\25158\01\DP01.dwg, DP05, 3/8/2022 1:55:00 PM, CS

NOTES

1. SEE SHEET 1 FOR BENCHMARK. SEE SHEET 2 FOR LEGEND.
2. SEE SHEET 2 FOR ADDITIONAL NOTES.

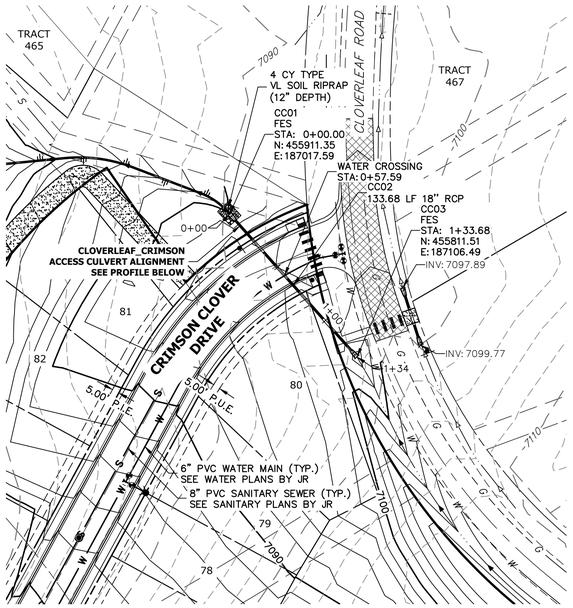

(A)

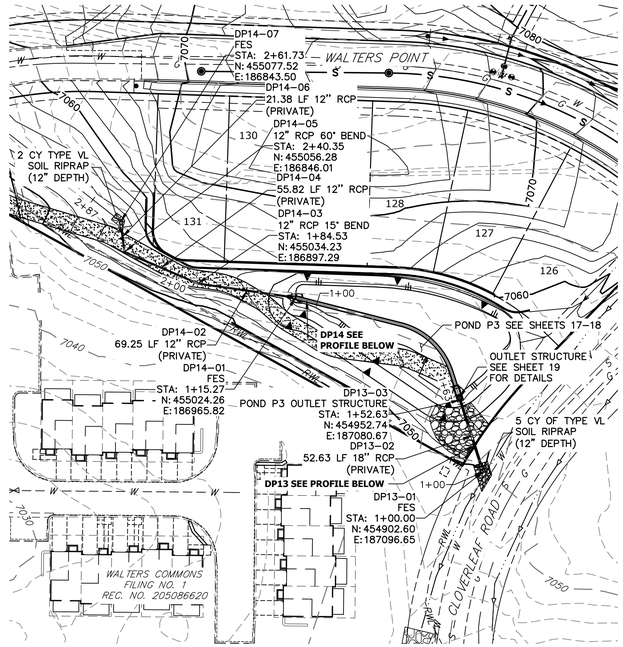

(B)

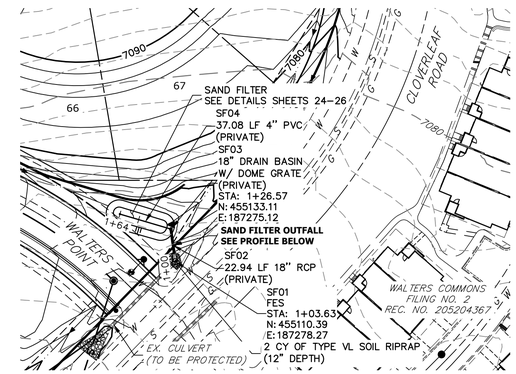

(C)

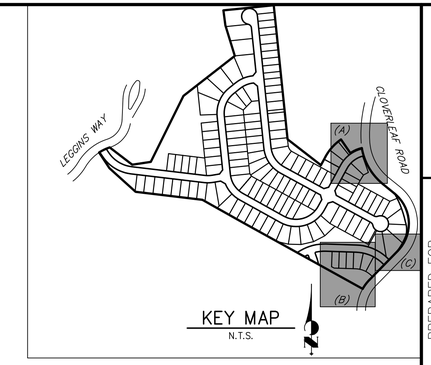

KEY MAP
N.T.S.

811 Know what's below. Call before you dig.

CLOVERLEAF_CRIMSON ACCESS CULVERT PROFILE
STA 0+00.00 TO 1+33.68

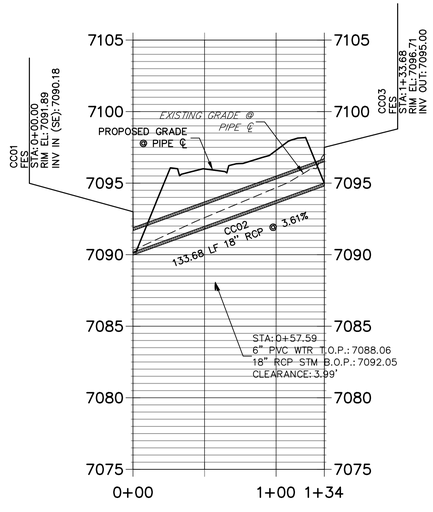

DP14 PROFILE
STA 1+00.00 TO 2+86.51

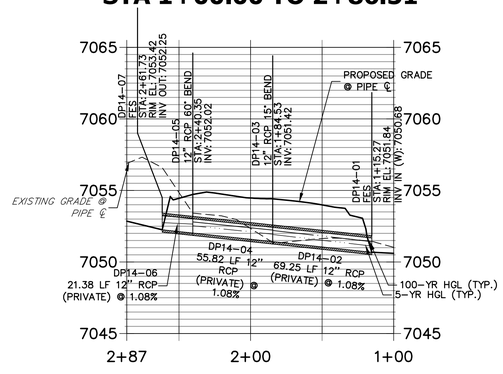

DP13 PROFILE
STA 1+00.00 TO 1+63.18

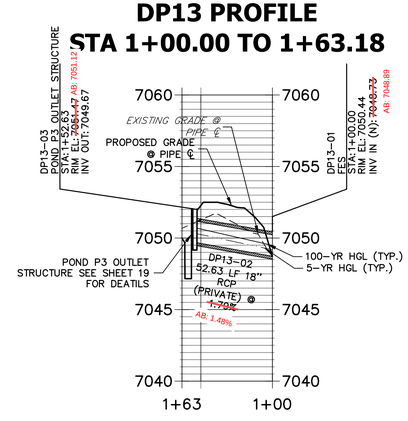

SAND FILTER PROFILE
STA 1+00.00 TO 1+63.64

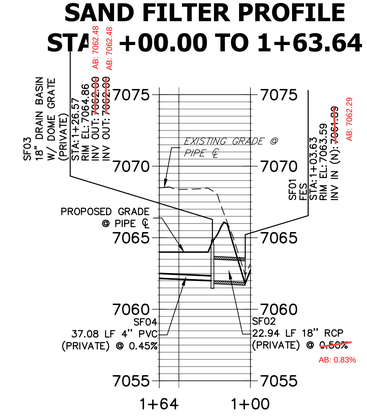

AS-BUILTS
05/24/2023
SF-21-023

EPC PCD 1/31/22

50 25 0 50 100
HORIZONTAL ORIGINAL SCALE: 1" = 50'
VERTICAL ORIGINAL SCALE: 1" = 5'

ENGINEER'S STATEMENT

PREPARED UNDER MY DIRECT SUPERVISION AND ON BEHALF OF JR ENGINEERING

12/15/21

MIKE A. BRAMLETT, P.E.
COLORADO P.E. 32314
FOR AND ON BEHALF OF JR ENGINEERING, LLC

DATE

UNTIL SUCH TIME AS THESE DRAWINGS ARE APPROVED BY THE APPROPRIATE REVIEWING AGENCIES, JR ENGINEERING APPROVES THEIR USE ONLY FOR THE PURPOSES DESIGNATED BY WRITTEN AUTHORIZATION.

PREPARED FOR
MONUMENT HILL CM LLC
1864 WOODMOOR DR, STE 100
COLORADO SPRINGS, CO 80920
ATTN: JOE DESJARDIN
(719) 476-0800
JDESJARDIN@PROTERRACO.COM

J·R ENGINEERING
A Westrian Company
Centennial 303-740-9393 • Colorado Springs 719-593-2593
Fort Collins 970-491-9888 • www.jrengineering.com

No.	REVISION	BY	DATE

H-SCALE	1"=50'
V-SCALE	1"=5'
DATE	12/15/21
DESIGNED BY	APL
DRAWN BY	APL
CHECKED BY	

CLOVERLEAF FILING 2
STORM SEWER PLAN AND PROFILE

SHEET 8 OF 28
JOB NO. 25158.01

X:\2510000 all\25158\01\Drawings\Sheet Dwgs\CD\25158001DP01.dwg, DP06, 12/15/2021 8:56:32 AM, CS

POINT TABULATION			
ID NO.	DESCRIPTION	NORTHING/EASTING	ELEVATION
M1	MAINT. ROAD	N: 455859.27 E:186982.75	7093.41
M2	MAINT. ROAD	N: 455929.11 E:186917.87	7084.58
M3	MAINT. ROAD	N: 455929.52 E:186912.45	7084.23
M4	MAINT. ROAD	N: 455824.20 E:186824.05	7075.94
M5	MAINT. ROAD	N: 455796.60 E:186739.15	7073.31
M6	MAINT. ROAD	N: 455811.38 E:186707.97	7073.31
M7	MAINT. ROAD	N: 455876.36 E:186634.66	7070.00
M8	MAINT. ROAD	N: 455886.75 E:186625.77	7069.29
M9	MAINT. ROAD	N: 455890.96 E:186623.06	7069.19
M10	MAINT. ROAD	N: 455949.19 E:186631.67	7067.59
M11	MAINT. ROAD	N: 455970.30 E:186656.43	7066.58
M12	MAINT. ROAD	N: 455959.22 E:186666.55	7066.66
M13	MAINT. ROAD	N: 455937.78 E:186641.41	7067.67
M14	MAINT. ROAD	N: 455899.07 E:186635.68	7068.73
M15	MAINT. ROAD	N: 455894.86 E:186638.38	7068.78
M16	MAINT. ROAD	N: 455886.91 E:186645.38	7069.43
M17	MAINT. ROAD	N: 455824.02 E:186716.33	7073.00
M18	MAINT. ROAD	N: 455810.15 E:186745.57	7073.01
M19	MAINT. ROAD	N: 455831.37 E:186810.88	7075.63
M20	MAINT. ROAD	N: 455941.26 E:186903.11	7083.93
M21	MAINT. ROAD	N: 455939.32 E:186928.86	7084.20
M22	MAINT. ROAD	N: 455869.86 E:186993.39	7093.83
R1	RIPRAP GRADEBREAK	N: 456417.32 E:186526.83	7068.83
R2	RIPRAP GRADEBREAK	N: 456409.36 E:186527.65	7066.79

POINT TABULATION			
ID NO.	DESCRIPTION	NORTHING/EASTING	ELEVATION
R3	RIPRAP GRADEBREAK	N: 456384.49 E:186530.21	7066.79
R4	RIPRAP GRADEBREAK	N: 456376.53 E:186531.03	7068.83
S1	SPILLWAY TOP AT CUTOFF WALL	N: 456367.48 E:186557.13	7073.00
S2	SPILLWAY CREST AT CUTOFF WALL	N: 456383.46 E:186556.01	7070.75
S3	SPILLWAY CREST AT CUTOFF WALL	N: 456415.55 E:186552.06	7070.75
S4	SPILLWAY TOP AT CUTOFF WALL	N: 456431.34 E:186548.93	7073.00
T1	TOE	N: 456413.61 E:186593.15	7067.01
T2	TOE	N: 456328.97 E:186620.43	7066.90
T3	TOE	N: 456306.32 E:186625.94	7066.82
T4	TOE	N: 456240.96 E:186633.60	7066.36
T5	TOE	N: 456203.99 E:186643.21	7066.25
T6	TOE	N: 456160.89 E:186659.64	7066.47
T7	TOE	N: 456124.98 E:186678.53	7066.91
T8	TOE	N: 456093.67 E:186705.02	7068.38
T9	TOE	N: 455983.58 E:186797.19	7068.58
T10	TOE	N: 455954.31 E:186810.68	7067.69
T11	TOE	N: 455929.48 E:186813.19	7067.67
T12	TOE	N: 455897.60 E:186806.09	7068.55
T13	TOE	N: 455873.20 E:186798.26	7069.20
T14	TOE	N: 455858.29 E:186794.84	7069.61
T15	TOE	N: 455832.24 E:186776.72	7070.24
T16	TOE	N: 455827.42 E:186737.04	7070.15
T17	TOE	N: 455832.38 E:186726.82	7070.00
T18	TOE	N: 455876.42 E:186681.51	7068.79

POINT TABULATION			
ID NO.	DESCRIPTION	NORTHING/EASTING	ELEVATION
T19	TOE	N: 455883.90 E:186660.93	7068.81
T20	TOE	N: 455893.70 E:186621.30	7069.12
T21	TOE	N: 455898.03 E:186606.28	7069.23
T22	TOE	N: 455930.48 E:186595.60	7068.74
T23	TOE	N: 456105.81 E:186601.23	7066.90
T24	TOE	N: 456167.68 E:186599.52	7066.05
T25	TOE	N: 456205.64 E:186593.52	7066.70
T26	TOE	N: 456368.66 E:186583.49	7066.90
T27	TOE	N: 456409.74 E:186569.20	7067.31
T28	TOE	N: 456414.59 E:186580.00	7066.98
T29	TOP	N: 456442.05 E:186579.64	7073.19
T30	TOP	N: 456419.31 E:186617.66	7073.00
T31	TOP	N: 456335.84 E:186645.93	7073.00
T32	TOP	N: 456296.42 E:186655.10	7073.00
T33	TOP	N: 456249.94 E:186661.20	7073.00
T34	TOP	N: 456221.20 E:186666.17	7073.00
T35	TOP	N: 456168.72 E:186685.03	7073.00
T36	TOP	N: 456136.14 E:186700.45	7073.00
T37	TOP	N: 456103.33 E:186721.00	7073.00
T38	TOP	N: 456075.98 E:186742.05	7073.00
T39	TOP	N: 455979.98 E:186823.14	7073.00
T40	TOP	N: 455950.58 E:186833.42	7073.00
T41	TOP	N: 455903.27 E:186828.70	7073.00
T42	TOP	N: 455868.63 E:186812.93	7073.00

POINT TABULATION			
ID NO.	DESCRIPTION	NORTHING/EASTING	ELEVATION
T43	TOP	N: 455853.68 E:186807.47	7073.00
T44	TOP	N: 455812.76 E:186774.67	7073.00
T45	TOP	N: 455819.72 E:186725.40	7073.00
T46	TOP	N: 455847.07 E:186667.71	7073.00
T47	TOP	N: 455869.22 E:186616.76	7073.00
T48	TOP	N: 455897.46 E:186586.05	7073.00
T49	TOP	N: 455931.76 E:186576.66	7073.00
T50	TOP	N: 456218.27 E:186565.74	7073.00
T51	TOP	N: 456367.16 E:186557.36	7073.00
T52	TOP	N: 456435.17 E:186565.98	7073.00
TC1	TRICKLE CHANNEL	N: 455939.64 E:186792.76	7066.83
TC2	TRICKLE CHANNEL	N: 455935.22 E:186747.86	7066.60
TC3	TRICKLE CHANNEL	N: 456037.60 E:186638.10	7065.72
TC4	TRICKLE CHANNEL	N: 456094.31 E:186639.72	7065.43
TC5	TRICKLE CHANNEL	N: 456104.39 E:186639.33	7065.38
TC6	TRICKLE CHANNEL	N: 456135.29 E:186636.04	7065.22
TC7	TRICKLE CHANNEL	N: 456161.67 E:186600.41	7065.00
TC8	TRICKLE CHANNEL	N: 456197.06 E:186626.73	7065.32
TC9	TRICKLE CHANNEL	N: 456414.78 E:186585.67	7066.43
TR1	TRAIL	N: 455842.31 E:186673.08	7073.04
TR2	TRAIL	N: 455869.12 E:186616.53	7073.04
TR3	TRAIL	N: 455929.77 E:186576.56	7073.04
TR4	TRAIL	N: 456208.10 E:186566.22	7073.00
TR5	TRAIL	N: 456367.14 E:186557.15	7073.05

POINT TABULATION			
ID NO.	DESCRIPTION	NORTHING/EASTING	ELEVATION
TR6	TRAIL	N: 456408.08 E:186553.54	7070.73
TR7	TRAIL	N: 456424.26 E:186550.33	7071.99
TR8	TRAIL	N: 456613.63 E:186512.82	7072.86
TR9	TRAIL	N: 456629.64 E:186491.15	7072.27
TR10	TRAIL	N: 456616.97 E:186368.07	7070.00
TR11	TRAIL	N: 456607.02 E:186369.10	7069.74
TR12	TRAIL	N: 456619.69 E:186492.18	7072.67
TR13	TRAIL	N: 456611.69 E:186503.01	7073.11
TR14	TRAIL	N: 456406.51 E:186543.65	7070.93
TR15	TRAIL	N: 456207.73 E:186556.23	7073.20
TR16	TRAIL	N: 455929.40 E:186566.57	7073.24
TR17	TRAIL	N: 455860.09 E:186612.24	7073.24
TR18	TRAIL	N: 455818.52 E:186699.92	7073.25

AS-BUILTS
05/24/2023
SF-21-023

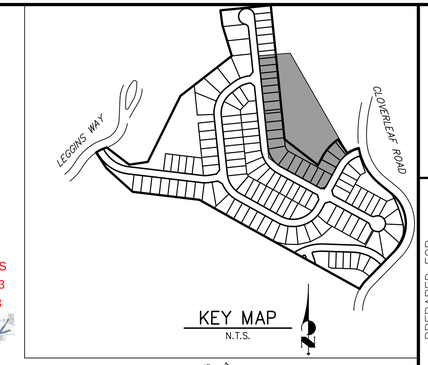

KEY MAP
N.T.S.

40 20 0 40 80
ORIGINAL SCALE: 1" = 40'

LINE TABLE		
LINE	BEARING	DISTANCE
L6	S84°22'20"W	45.12'
L8	N01°38'18"E	56.74'
L10	N06°04'25"W	21.04'
L12	N10°40'50"W	221.56'

CURVE TABLE			
CURVE	DELTA	RADIUS	LENGTH
C6	97°15'58"	100.00'	169.76'
C7	7°42'43"	75.00'	10.09'
C8	95°00'29"	30.01'	49.77'
C9	94°37'15"	30.00'	49.54'

NOTES

1. ALL PROPOSED POND IMPROVEMENTS ARE PRIVATE UNLESS OTHERWISE NOTED.
2. SEE SHEETS 3–8 FOR PROPOSED STORM SEWER DESIGN.
3. CLOVERLEAF METROPOLITAN DISTRICT WILL OWN AND MAINTAIN ALL RETAINING WALLS WITHIN TRACTS. WALLS ON LOTS WILL BE OWNED AND MAINTAINED BY THE INDIVIDUAL LOT OWNER.

811
Know what's **below.**
Call before you dig.

THE LOCATIONS OF EXISTING ABOVE GROUND AND UNDERGROUND UTILITIES ARE SHOWN IN AN APPROXIMATE WAY ONLY. THE CONTRACTOR SHALL DETERMINE THE EXACT LOCATION OF ALL EXISTING UTILITIES BEFORE COMMENCING WORK. THE CONTRACTOR SHALL BE FULLY RESPONSIBLE FOR ANY AND ALL DAMAGES WHICH MIGHT BE CAUSED BY HIS FAILURE TO EXACTLY LOCATE AND PRESERVE ANY AND ALL ABOVE GROUND AND UNDERGROUND UTILITIES.

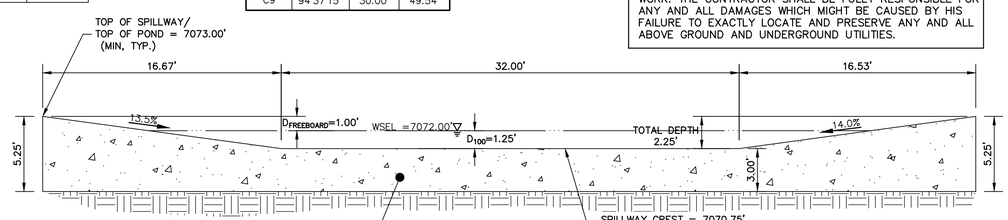

POND 1 EMERGENCY SPILLWAY
W/ CONCRETE CUTOFF WALL TYP.
SECTION
SCALE: 1"=5'

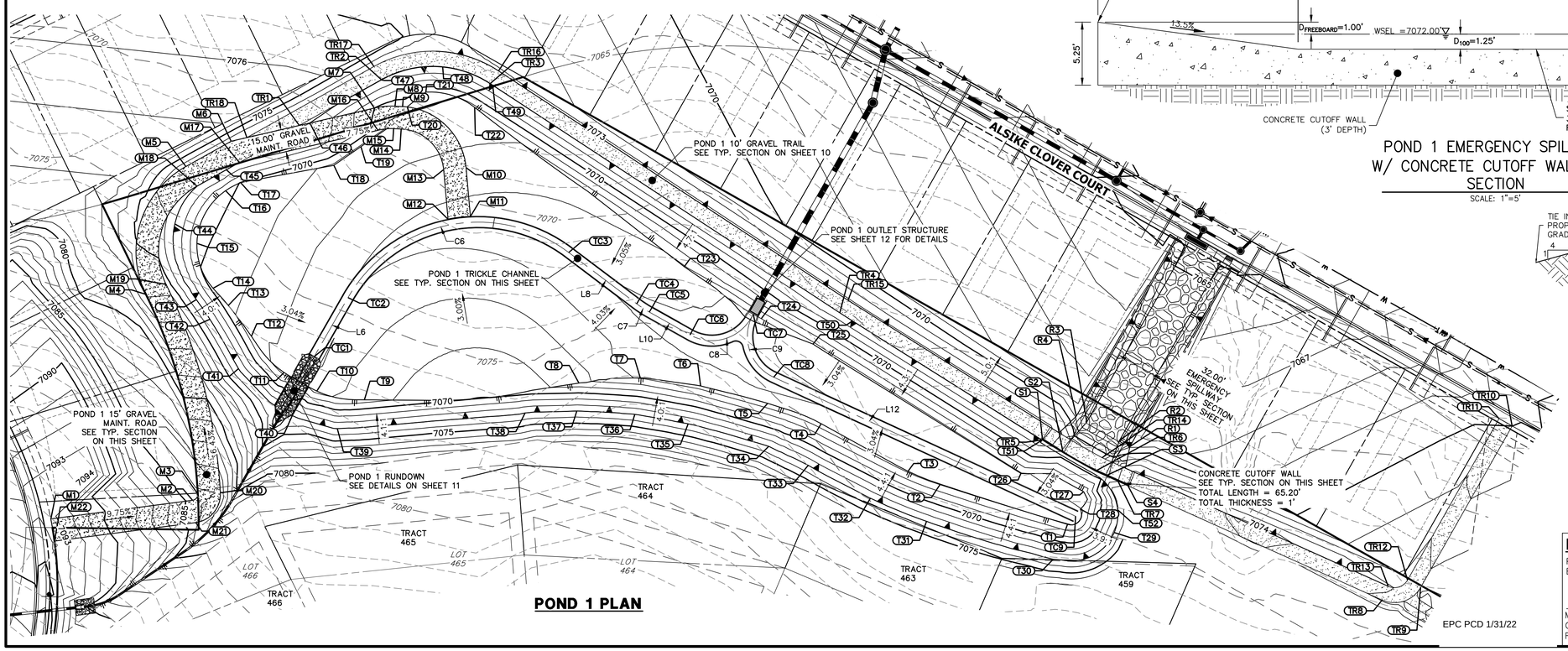

POND 1 PLAN

EPC PCD 1/31/22

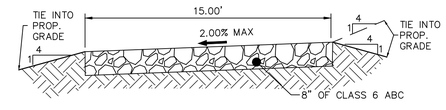

15' GRAVEL MAINTENANCE
ACCESS ROAD TYPICAL SECTION
N.T.S.

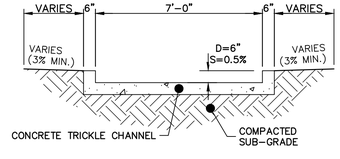

POND 1 TRICKLE CHANNEL
SCALE: 1"=3'

ENGINEER'S STATEMENT

PREPARED UNDER MY DIRECT SUPERVISION AND ON BEHALF OF JR ENGINEERING

MIKE A. BRAMLETT, P.E.
COLORADO P.E. 32314
FOR AND ON BEHALF OF JR ENGINEERING, LLC

12/15/21
DATE

UNTIL SUCH TIME AS THESE DRAWINGS ARE APPROVED BY THE APPROPRIATE REVIEWING AGENCIES, JR ENGINEERING APPROVES THEIR USE ONLY FOR THE PURPOSES DESIGNATED BY WRITTEN AUTHORIZATION.

PREPARED FOR
MONUMENT HILL CM LLC
1864 WOODMOOR DR, STE 100
COLORADO SPRINGS, CO 80920
ATTN: JOE DESJARDIN
(719) 476–0800
JDESJARDIN@PROTERRACO.COM

J·R ENGINEERING
A Westrian Company
Centennial 303–740–9393 • Colorado Springs 719–593–2593
Fort Collins 970–491–9888 • www.jrengineering.com

No.	REVISION	BY	DATE

H-SCALE	1"=40'
V-SCALE	N/A
DATE	12/15/21
DESIGNED BY	GVT
DRAWN BY	GVT
CHECKED BY	

CLOVERLEAF FILING 2

POND PLANS AND DETAILS

SHEET 9 OF 28

JOB NO. 25158.01

X:\2510000.all\2515801\Drawings\Sheet Dwgs\Civil\2515801P01.dwg, P1 Plan, 12/15/2021 11:11:23 AM, CS

P1-1 PROFILE
STA 0+00.00 TO 2+21.81

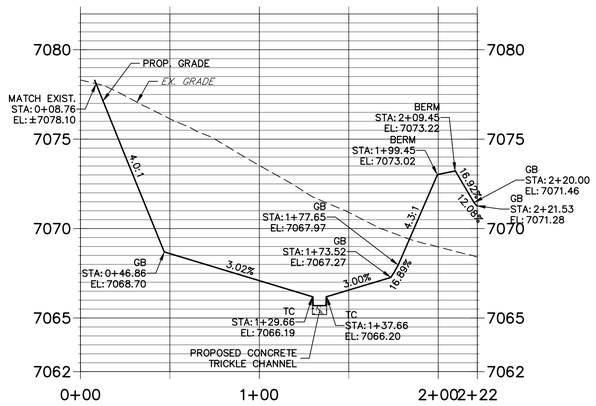

P1-2 PROFILE
STA 0+00.00 TO 1+45.94

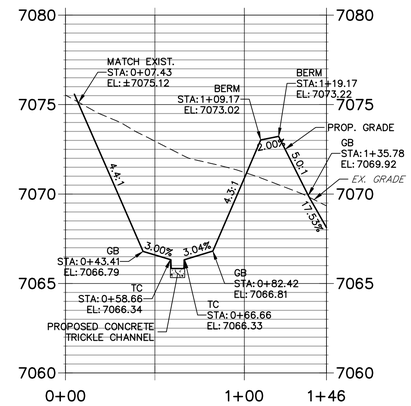

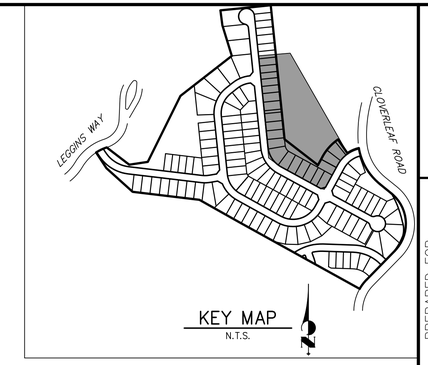

KEY MAP
N.T.S.

40 20 0 40 80
HORIZONTAL
ORIGINAL SCALE: 1" = 40'
VERTICAL
ORIGINAL SCALE: 1" = 4'

NOTES

1. ALL PROPOSED POND IMPROVEMENTS ARE PRIVATE UNLESS OTHERWISE NOTED.
2. SEE SHEETS 3–8 FOR PROPOSED STORM SEWER DESIGN.
3. CLOVERLEAF METROPOLITAN DISTRICT WILL OWN AND MAINTAIN ALL RETAINING WALLS WITHIN TRACTS. WALLS ON LOTS WILL BE OWNED AND MAINTAINED BY THE INDIVIDUAL LOT OWNER.

THE LOCATIONS OF EXISTING ABOVE GROUND AND UNDERGROUND UTILITIES ARE SHOWN IN AN APPROXIMATE WAY ONLY. THE CONTRACTOR SHALL DETERMINE THE EXACT LOCATION OF ALL EXISTING UTILITIES BEFORE COMMENCING WORK. THE CONTRACTOR SHALL BE FULLY RESPONSIBLE FOR ANY AND ALL DAMAGES WHICH MIGHT BE CAUSED BY HIS FAILURE TO EXACTLY LOCATE AND PRESERVE ANY AND ALL ABOVE GROUND AND UNDERGROUND UTILITIES.

811
Know what's **below.**
Call before you dig.

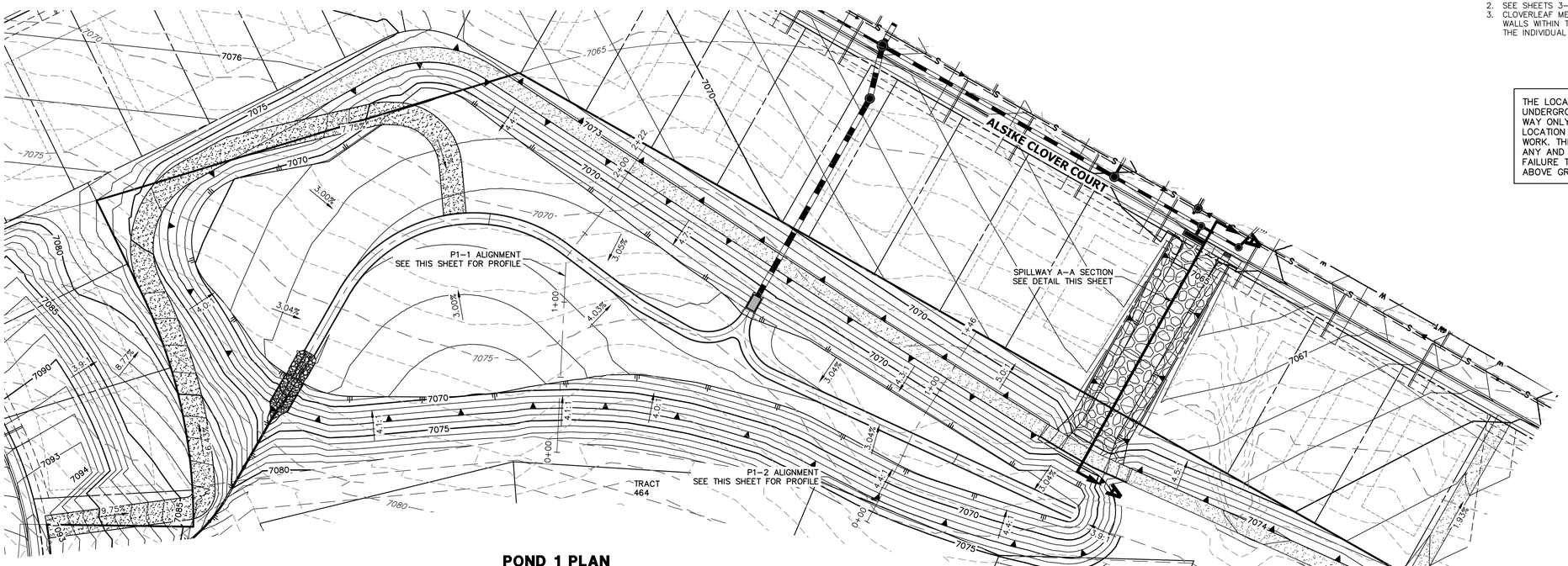

POND 1 PLAN

AS-BUILTS
05/24/2023
SF-21-023

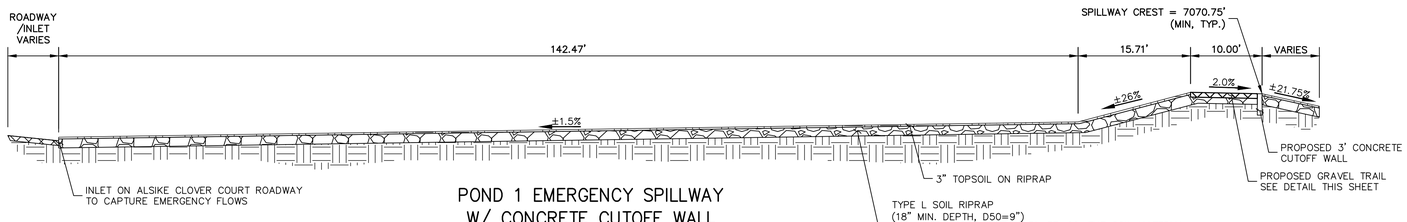

POND 1 EMERGENCY SPILLWAY
W/ CONCRETE CUTOFF WALL
SECTION A–A
SCALE: 1"=10'

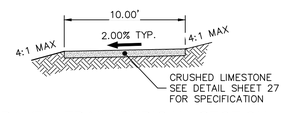

GRAVEL TRAIL TYPICAL SECTION
N.T.S. (RUNS WITHIN POND)

EPC PCD 1/31/22

ENGINEER'S STATEMENT

PREPARED UNDER MY DIRECT SUPERVISION AND ON BEHALF OF JR ENGINEERING

12/15/21

MIKE A. BRAMLETT, P.E.
COLORADO P.E. 32314
FOR AND ON BEHALF OF JR ENGINEERING, LLC

DATE

UNTIL SUCH TIME AS THESE DRAWINGS ARE APPROVED BY THE APPROPRIATE REVIEWING AGENCIES, JR ENGINEERING APPROVES THEIR USE ONLY FOR THE PURPOSES DESIGNATED BY WRITTEN AUTHORIZATION.

PREPARED FOR
MONUMENT HILL CM LLC
1864 WOODMOOR DR, STE 100
COLORADO SPRINGS, CO 80920
ATTN: JOE DESJARDIN
(719) 476–0800
JDESJARDIN@PROTERRACO.COM

J·R ENGINEERING
A Westrian Company
Centennial 303–740–9393 • Colorado Springs 719–593–2593
Fort Collins 970–491–9888 • www.jrengineering.com

No.	REVISION	BY	DATE

H–SCALE	1"=40'
V–SCALE	1"=4'
DATE	12/15/21
DESIGNED BY	GVT
DRAWN BY	GVT
CHECKED BY	

CLOVERLEAF FILING 2

POND PLANS AND DETAILS

SHEET 10 OF 28

JOB NO. 25158.01

X:\2510000.all\25158\01\Drawings\Sheet Dwgs\CDs\25158\P01.dwg, P1 Profile, 12/15/2021 7:12:46 AM, CS

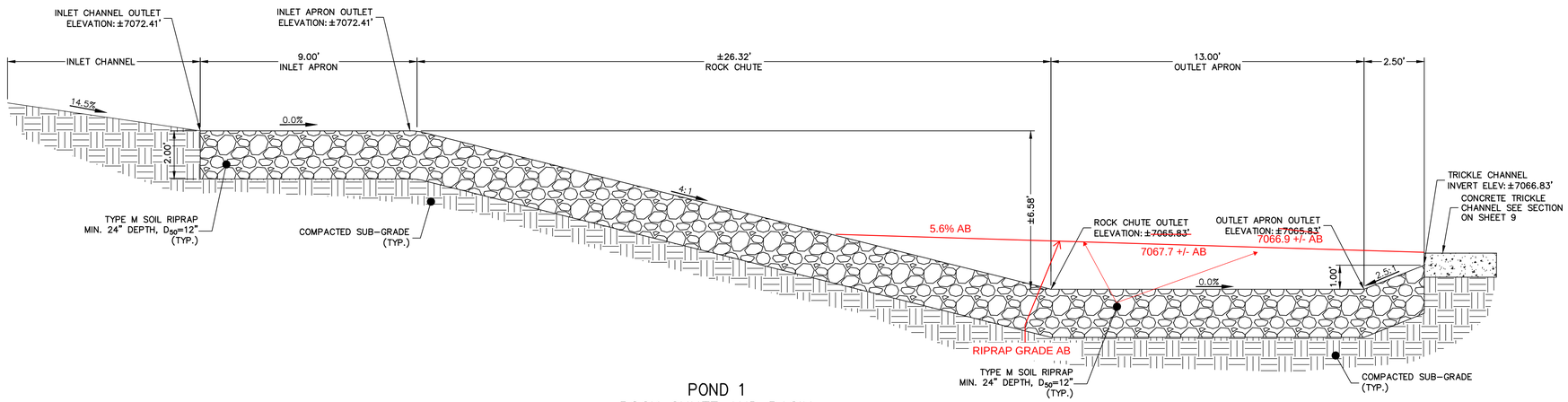

POND 1
ROCK CHUTE AND BASIN
SCALE: 3/8" = 1'

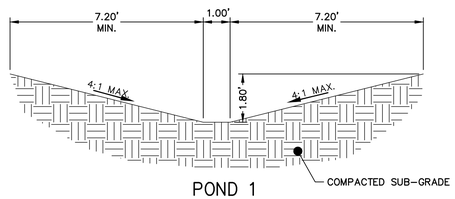

POND 1
INLET CHANNEL
TYP. CROSS-SECTION
SCALE: 3/8" = 1'

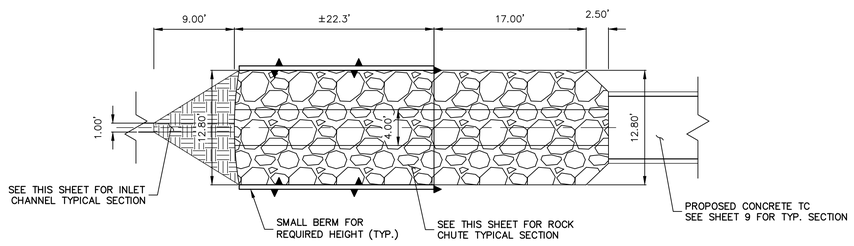

POND 1
ROCK CHUTE AND BASIN
PLAN VIEW
SCALE: 1/8" = 1'

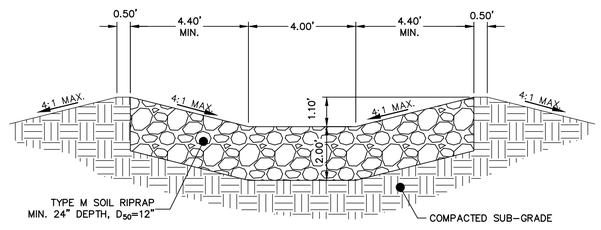

POND 1
ROCK CHUTE AND BASIN
TYP. CROSS-SECTION
SCALE: 3/8" = 1'

AS-BUILTS
05/24/2023
SF-21-023

EPC PCD 1/31/22

Know what's **below.**
Call before you dig.

ENGINEER'S STATEMENT

PREPARED UNDER MY DIRECT SUPERVISION AND ON BEHALF OF JR ENGINEERING

MIKE A. BRAMLETT, P.E.
COLORADO P.E. 32314
FOR AND ON BEHALF OF JR ENGINEERING, LLC

DATE 12/15/21

UNTIL SUCH TIME AS THESE DRAWINGS ARE APPROVED BY THE APPROPRIATE REVIEWING AGENCIES, JR ENGINEERING APPROVES THEIR USE ONLY FOR THE PURPOSES DESIGNATED BY WRITTEN AUTHORIZATION.

PREPARED FOR
MONUMENT HILL CM LLC
1864 WOODMOOR DR, STE 100
COLORADO SPRINGS, CO 80920
ATTN: JOE DESJARDIN
(719) 476-0800
JDESJARDIN@PROTERRACO.COM

J·R ENGINEERING
A Westrian Company
Centennial 303-740-9393 • Colorado Springs 719-593-2593
Fort Collins 970-491-9888 • www.jrengineering.com

No.	REVISION	BY	DATE

H-SCALE	VARIES
V-SCALE	VARIES
DATE	12/15/21
DESIGNED BY	GAG
DRAWN BY	GAG
CHECKED BY	

CLOVERLEAF FILING 2

POND PLANS AND DETAILS

SHEET 11 OF 28

JOB NO. 25158.01

X:\2510000.all\25158\01\Drawings\Sheet Dwgs\CDs\25158\01P01-ST.dwg, P1-Rundown, 12/15/2021 6:28:04 AM, CS

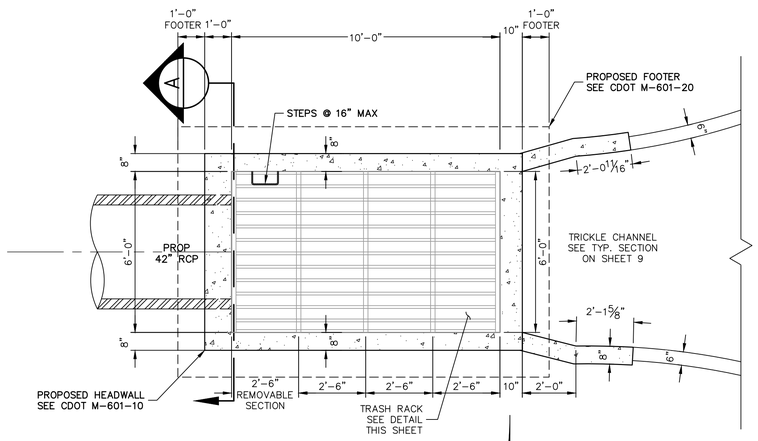

POND 1
OUTLET STRUCTURE PLAN
SCALE: 3/8"=1'

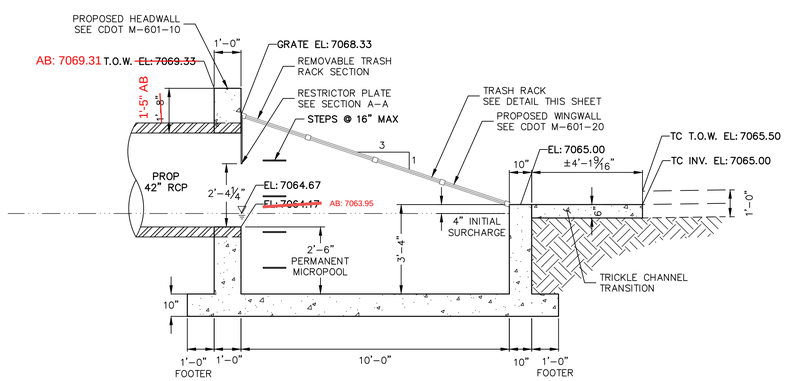

POND 1
OUTLET STRUCTURE PROFILE
SCALE: 3/8"=1'

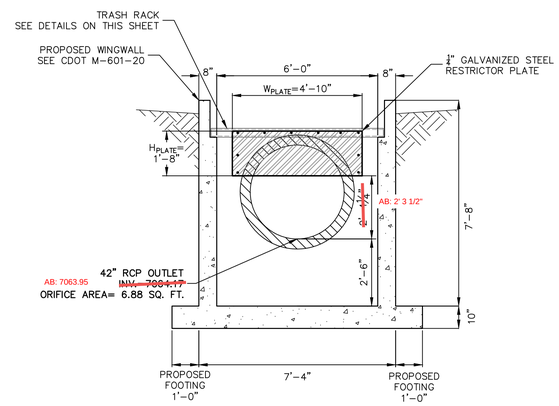

A A-A SECTION
SCALE: 3/8"=1'

AS-BUILTS
05/24/2023
SF-21-023

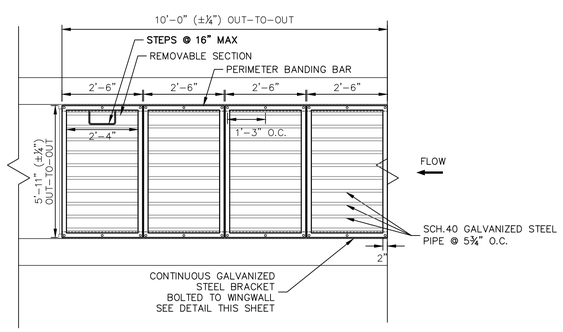

TRASH RACK DETAIL
(PLAN)
N.T.S.

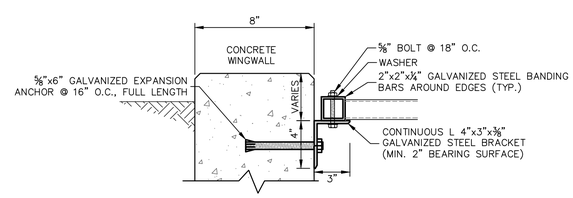

TRASH RACK CONNECTION TO WALLS
N.T.S.

POND 1 OUTLET STRUCTURE NOTES:

TRASH RACKS:

1. TRASH RACKS SHALL BE 1¼" SCH.40 STEEL PIPE, GALVANIZED, @ 6" CENTERS. SUPPORT BARS SHALL BE ¼"x2" STEEL RECTANGULAR BARS, GALVANIZED, @ 36". ALL TRASH RACKS SHALL BE MOUNTED USING STAINLESS STEEL HARDWARE.
2. REMOVABLE TRASH RACK SECTIONS SHALL BE MOUNTED USING STAINLESS STEEL HARDWARE AND PROVIDED WITH HINGED & LOCKABLE OR BOLTABLE ACCESS PANELS AS SHOWN ON THE PLANS.
3. STEEL TRASH RACKS SHALL BE HOT DIP GALVANIZED AND MAY BE HOT POWDER COATED AFTER GALVANIZING.
4. STRUCTURAL STEEL FOR GRATES AND BARS SHALL BE GALVANIZED AND SHALL BE IN ACCORDANCE WITH CDOT STANDARD SPECIFICATIONS, SUBSECTION 712.06.
5. ALL HARDWARE, BOLTS, AND FASTENERS SHALL BE STAINLESS STEEL.
6. CONTRACTOR SHALL SUBMIT SHOP DRAWINGS FOR ALL PLATES AND GRATING FOR ENGINEER'S APPROVAL PRIOR TO CONSTRUCTION.

EPC PCD 1/31/22

Know what's below.
Call before you dig.

ENGINEER'S STATEMENT

PREPARED UNDER MY DIRECT SUPERVISION AND ON BEHALF OF JR ENGINEERING

MIKE A. BRAMLETT, P.E.
COLORADO P.E. 32314
FOR AND ON BEHALF OF JR ENGINEERING, LLC

DATE 12/15/21

UNTIL SUCH TIME AS THESE DRAWINGS ARE APPROVED BY THE APPROPRIATE REVIEWING AGENCIES, JR ENGINEERING APPROVES THEIR USE ONLY FOR THE PURPOSES DESIGNATED BY WRITTEN AUTHORIZATION.

PREPARED FOR
MONUMENT HILL CM LLC
1864 WOODMOOR DR, STE 100
COLORADO SPRINGS, CO 80920
ATTN: JOE DESJARDIN
(719) 476-0800
JDESJARDIN@PROTERRACO.COM

J·R ENGINEERING
A Westrian Company
Centennial 303-740-9393 • Colorado Springs 719-593-2593
Fort Collins 970-491-9888 • www.jrengineering.com

No.	REVISION	BY	DATE

H-SCALE	3/8"=1'
V-SCALE	3/8"=1'
DATE	12/15/21
DESIGNED BY	GAG
DRAWN BY	GAG
CHECKED BY	

CLOVERLEAF FILING 2

POND PLANS AND DETAILS

SHEET 12 OF 28

JOB NO. 25158.01

X:\2510000.all\2515801\Drawings\Sheet Dwgs\Ch2\2515801P01-DT.dwg P1-Outlet, 12/15/2021 6:28:13 AM, CS

POINT TABULATION			
ID NO.	DESCRIPTION	NORTHING/EASTING	ELEVATION
M1	MAINT. ROAD	N: 455732.46 E: 185646.43	7024.96
M2	MAINT. ROAD	N: 455873.71 E: 185680.33	7030.30
M3	MAINT. ROAD	N: 455879.71 E: 185682.16	7030.07
M4	MAINT. ROAD	N: 455885.10 E: 185685.34	7030.25
M5	MAINT. ROAD	N: 455980.46 E: 185749.61	7026.93
M6	MAINT. ROAD	N: 456028.14 E: 185828.24	7025.31
M7	MAINT. ROAD	N: 456030.85 E: 185852.13	7024.69
M8	MAINT. ROAD	N: 456015.44 E: 185849.40	7024.53
M9	MAINT. ROAD	N: 456013.24 E: 185829.92	7025.02
M10	MAINT. ROAD	N: 455972.07 E: 185762.05	7026.29
M11	MAINT. ROAD	N: 455876.28 E: 185697.48	7030.31
M12	MAINT. ROAD	N: 455873.67 E: 185695.89	7030.17
M13	MAINT. ROAD	N: 455870.73 E: 185695.04	7030.02
R1	RIPRAP GRADEBREAK	N: 455824.15 E: 185726.17	7030.34
R2	RIPRAP GRADEBREAK	N: 455726.36 E: 185697.65	7027.75
R3	RIPRAP GRADEBREAK	N: 455730.67 E: 185661.41	7025.78
R4	RIPRAP GRADEBREAK	N: 455834.23 E: 185691.61	7029.47

POINT TABULATION			
ID NO.	DESCRIPTION	NORTHING/EASTING	ELEVATION
R5	RIPRAP GRADEBREAK	N: 455876.86 E: 185697.87	7030.34
S1	SPILLWAY TOP AT CUTOFF WALL	N: 455844.40 E: 185742.36	7030.00
S2	SPILLWAY CREST AT CUTOFF WALL	N: 455853.29 E: 185735.36	7028.12
S3	SPILLWAY CREST AT CUTOFF WALL	N: 455879.81 E: 185707.42	7028.12
S4	SPILLWAY TOP AT CUTOFF WALL	N: 455886.98 E: 185705.15	7030.00
T1	TOE	N: 456196.51 E: 185860.07	7026.92
T2	TOE	N: 456194.31 E: 185886.26	7026.49
T3	TOE	N: 456192.25 E: 185910.80	7027.02
T4	TOE/FOREBAY	N: 456074.58 E: 185921.13	7026.28
T5	TOE/FOREBAY	N: 456058.98 E: 185922.64	7026.28
T6	TOE	N: 455935.99 E: 185933.24	7026.52
T7	TOE	N: 455873.95 E: 185908.84	7025.76
T8	TOE/FOREBAY	N: 455856.09 E: 185843.33	7025.26
T9	TOE/FOREBAY	N: 455858.58 E: 185830.11	7025.06
T10	TOE	N: 455873.27 E: 185751.88	7023.88
T11	TOE	N: 455877.69 E: 185742.61	7022.51
T12	TOE	N: 455883.54 E: 185737.91	7023.13

POINT TABULATION			
ID NO.	DESCRIPTION	NORTHING/EASTING	ELEVATION
T13	TOE	N: 455902.00 E: 185753.40	7023.17
T14	TOE	N: 455940.54 E: 185760.17	7025.00
T15	TOE	N: 455982.65 E: 185755.05	7026.66
T16	TOE	N: 456091.94 E: 185790.68	7027.05
T19	TOP	N: 456225.18 E: 185919.99	7030.00
T20	TOP/FOREBAY	N: 456072.49 E: 185939.85	7030.84
T21	TOP/FOREBAY	N: 456064.83 E: 185940.62	7030.84
T22	TOP	N: 455929.91 E: 185949.77	7030.00
T23	TOP	N: 455869.86 E: 185929.94	7030.00
T24	TOP	N: 455836.83 E: 185873.99	7030.00
T25	TOP	N: 455844.40 E: 185742.36	7030.00
T26	TOP	N: 455835.74 E: 185734.87	7030.00
T30	TOP/MAINT. ROAD	N: 455875.64 E: 185698.20	7030.00
T31	TOP/MAINT. ROAD	N: 455943.62 E: 185724.78	7030.00
T32	TOP	N: 456092.63 E: 185775.71	7030.00
T33	TOP	N: 456208.06 E: 185853.24	7030.00
T34	TOP/MAINT. ROAD	N: 455901.35 E: 185696.29	7030.13

POINT TABULATION			
ID NO.	DESCRIPTION	NORTHING/EASTING	ELEVATION
T35	TOP	N: 456101.53 E: 185767.79	7030.00
T36	TOP/MAINT. ROAD	N: 455887.44 E: 185705.00	7030.12
T37	TOE/MAINT. ROAD	N: 455964.90 E: 185757.21	7026.72
TC1	TRICKLE CHANNEL	N: 456064.41 E: 185898.85	7024.65
TC2	TRICKLE CHANNEL	N: 456052.26 E: 185870.89	7024.45
TC3	TRICKLE CHANNEL	N: 456185.30 E: 185883.03	7025.76
TC4	TRICKLE CHANNEL	N: 456023.30 E: 185854.35	7024.12
TC5	TRICKLE CHANNEL	N: 455955.29 E: 185842.30	7023.43
TC6	TRICKLE CHANNEL	N: 455918.85 E: 185824.82	7023.02
TC7	TRICKLE CHANNEL	N: 455867.13 E: 185837.89	7023.29
TC8	TRICKLE CHANNEL	N: 455893.79 E: 185827.22	7022.99
TC9	TRICKLE CHANNEL	N: 455899.27 E: 185799.02	7022.69
TC10	TRICKLE CHANNEL	N: 455896.72 E: 185791.00	7022.61
TC11	TRICKLE CHANNEL	N: 455880.68 E: 185740.45	7022.00

LINE TABLE		
LINE	BEARING	DISTANCE
L1	N10°02'28"E	164.48'
L2	N10°02'28"E	69.12'
L3	N72°23'27"E	53.04'
L4	S84°07'17"W	18.94'
L5	S13°41'44"W	2.84'
L6	S06°47'26"W	2.01'
L7	N72°23'27"E	8.41'

CURVE TABLE			
CURVE	DELTA	RADIUS	LENGTH
C1	62°20'59"	75.20'	81.83'
C2	70°25'33"	50.40'	61.95'
C3	114°23'59"	30.00'	59.90'

NOTES

1. ALL PROPOSED POND IMPROVEMENTS ARE PRIVATE UNLESS OTHERWISE NOTED.
2. SEE SHEETS 3–8 FOR PROPOSED STORM SEWER DESIGN.
3. CLOVERLEAF METROPOLITAN DISTRICT WILL OWN AND MAINTAIN ALL RETAINING WALLS WITHIN TRACTS. WALLS ON LOTS WILL BE OWNED AND MAINTAINED BY THE INDIVIDUAL LOT OWNER.

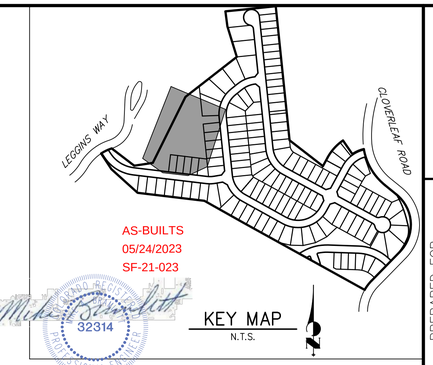

KEY MAP
N.T.S.

811 Know what's below. Call before you dig.

THE LOCATIONS OF EXISTING ABOVE GROUND AND UNDERGROUND UTILITIES ARE SHOWN IN AN APPROXIMATE WAY ONLY. THE CONTRACTOR SHALL DETERMINE THE EXACT LOCATION OF ALL EXISTING UTILITIES BEFORE COMMENCING WORK. THE CONTRACTOR SHALL BE FULLY RESPONSIBLE FOR ANY AND ALL DAMAGES WHICH MIGHT BE CAUSED BY HIS FAILURE TO EXACTLY LOCATE AND PRESERVE ANY AND ALL ABOVE GROUND AND UNDERGROUND UTILITIES.

20 10 0 20 40
ORIGINAL SCALE: 1" = 20'

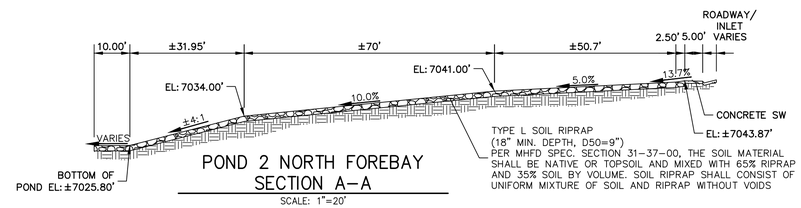

POND 2 NORTH FOREBAY
SECTION A–A
SCALE: 1"=20'

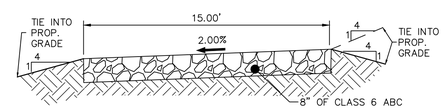

15' GRAVEL MAINTENANCE
ACCESS ROAD TYPICAL SECTION
N.T.S.

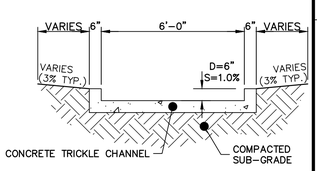

POND 2 TRICKLE CHANNEL
SCALE: 1"=3'

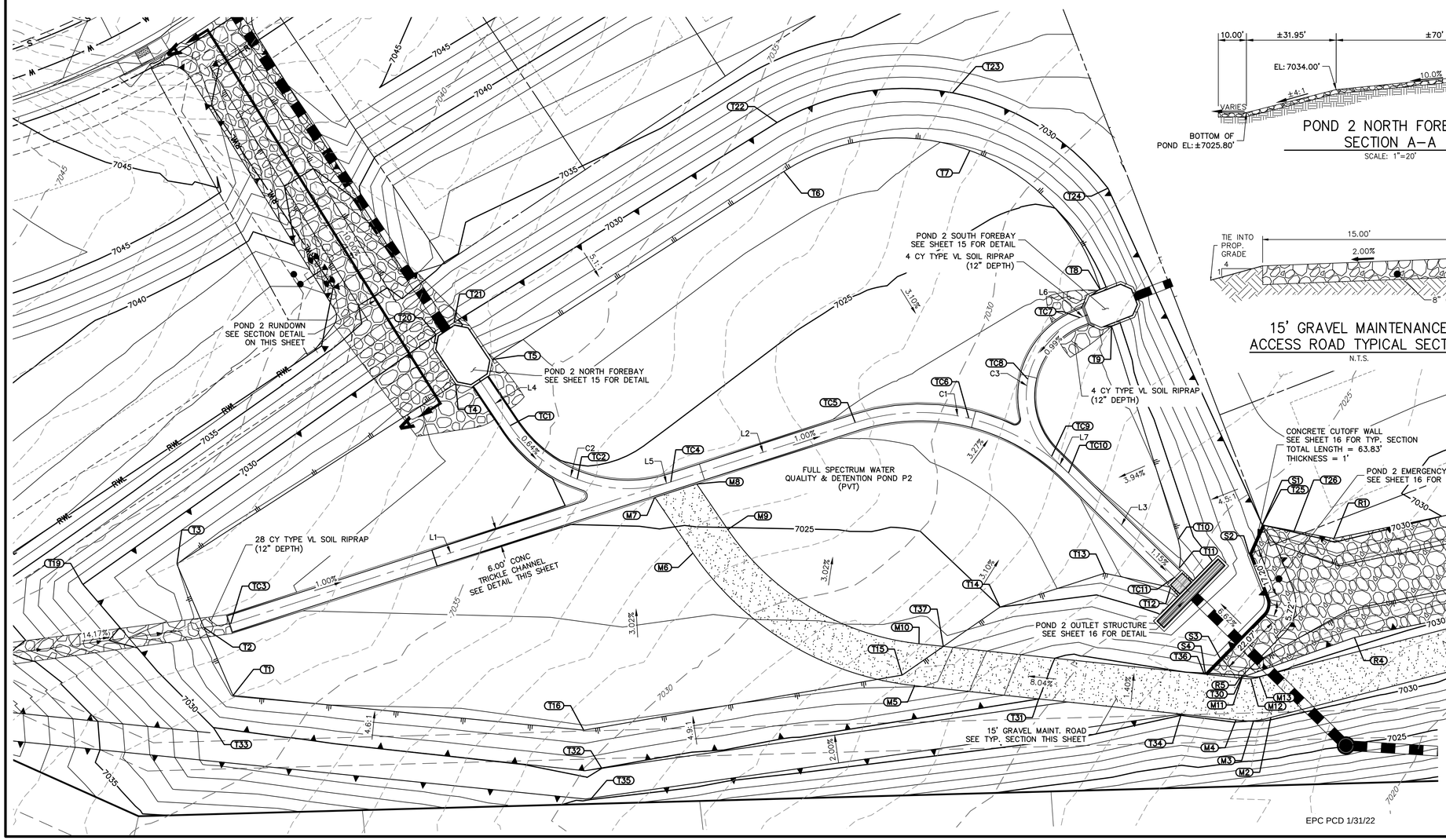

ENGINEER'S STATEMENT

PREPARED UNDER MY DIRECT SUPERVISION AND ON BEHALF OF JR ENGINEERING

MIKE A. BRAMLETT, P.E.
COLORADO P.E. 32314
FOR AND ON BEHALF OF JR ENGINEERING, LLC

DATE 12/15/21

UNTIL SUCH TIME AS THESE DRAWINGS ARE APPROVED BY THE APPROPRIATE REVIEWING AGENCIES, JR ENGINEERING APPROVES THEIR USE ONLY FOR THE PURPOSES DESIGNATED BY WRITTEN AUTHORIZATION.

PREPARED FOR
MONUMENT HILL CM LLC
1864 WOODMOOR DR, STE 100
COLORADO SPRINGS, CO 80920
ATTN: JOE DESJARDIN
(719) 476–0800
JDESJARDIN@PROTERRACO.COM

J·R ENGINEERING
A Westrian Company
Centennial 303–740–9393 • Colorado Springs 719–593–2593
Fort Collins 970–491–9888 • www.jrengineering.com

No.	REVISION	BY	DATE

H–SCALE	1"=20'
V–SCALE	N/A
DATE	12/15/21
DESIGNED BY	GVT
DRAWN BY	GVT
CHECKED BY	

CLOVERLEAF FILING 2
POND PLANS AND DETAILS

SHEET 13 OF 28
JOB NO. 25158.01

X:\2510000.all\25158\01\Drawings\Sheet Dwgs\CD\25158001P02.dwg, P2 Plan, 12/15/2021 11:11:36 AM, CS

POND P2-1 PROFILE
STA 0+00.00 TO 2+31.71

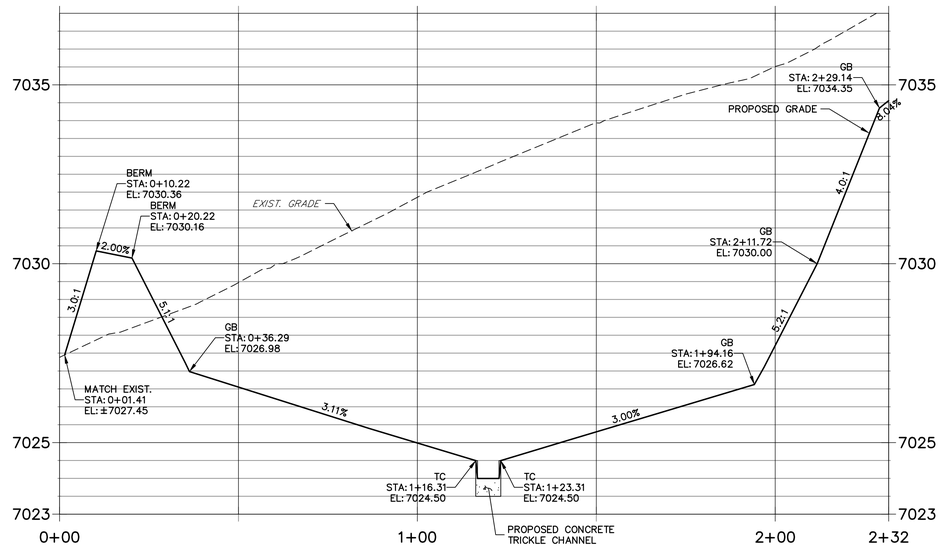

POND P2-2 PROFILE
STA 0+00.00 TO 1+81.73

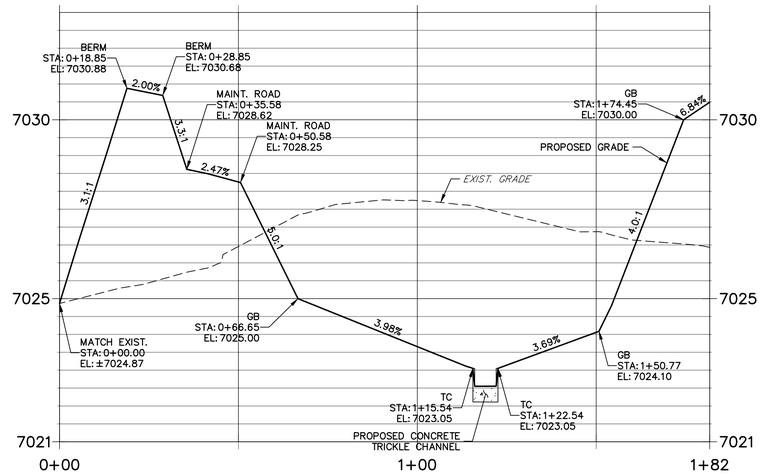

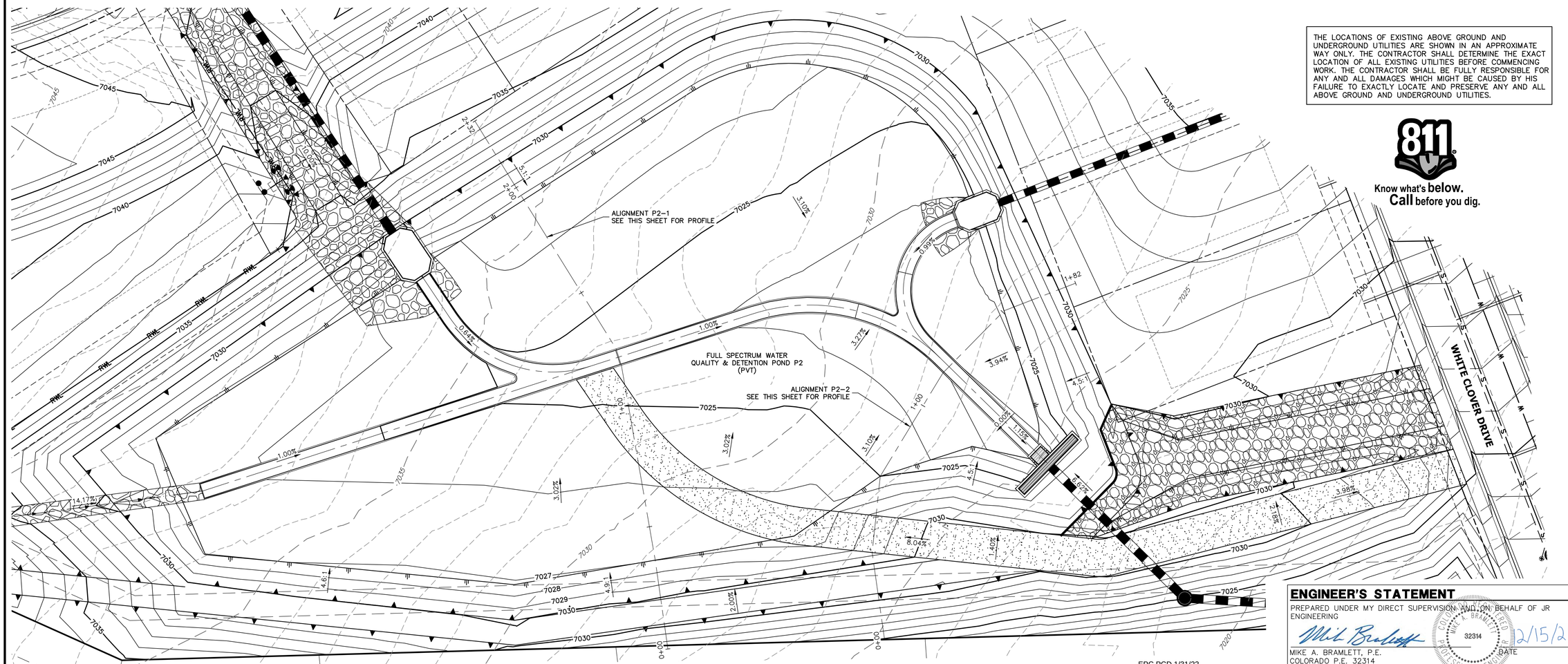

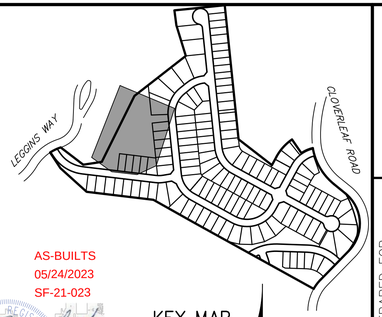

AS-BUILTS
05/24/2023
SF-21-023

KEY MAP
N.T.S.

20 10 0 20 40
HORIZONTAL
ORIGINAL SCALE: 1" = 20'
VERTICAL
ORIGINAL SCALE: 1" = 2'

NOTES

1. ALL PROPOSED POND IMPROVEMENTS ARE PRIVATE UNLESS OTHERWISE NOTED.
2. SEE SHEETS 3–8 FOR PROPOSED STORM SEWER DESIGN.
3. CLOVERLEAF METROPOLITAN DISTRICT WILL OWN AND MAINTAIN ALL RETAINING WALLS WITHIN TRACTS. WALLS ON LOTS WILL BE OWNED AND MAINTAINED BY THE INDIVIDUAL LOT OWNER.

THE LOCATIONS OF EXISTING ABOVE GROUND AND UNDERGROUND UTILITIES ARE SHOWN IN AN APPROXIMATE WAY ONLY. THE CONTRACTOR SHALL DETERMINE THE EXACT LOCATION OF ALL EXISTING UTILITIES BEFORE COMMENCING WORK. THE CONTRACTOR SHALL BE FULLY RESPONSIBLE FOR ANY AND ALL DAMAGES WHICH MIGHT BE CAUSED BY HIS FAILURE TO EXACTLY LOCATE AND PRESERVE ANY AND ALL ABOVE GROUND AND UNDERGROUND UTILITIES.

811
Know what's **below.**
Call before you dig.

ENGINEER'S STATEMENT

PREPARED UNDER MY DIRECT SUPERVISION AND ON BEHALF OF JR ENGINEERING

MIKE A. BRAMLETT, P.E.
COLORADO P.E. 32314
FOR AND ON BEHALF OF JR ENGINEERING, LLC

DATE 12/15/21

UNTIL SUCH TIME AS THESE DRAWINGS ARE APPROVED BY THE APPROPRIATE REVIEWING AGENCIES, JR ENGINEERING APPROVES THEIR USE ONLY FOR THE PURPOSES DESIGNATED BY WRITTEN AUTHORIZATION.

PREPARED FOR
MONUMENT HILL CM LLC
1864 WOODMOOR DR, STE 100
COLORADO SPRINGS, CO 80920
ATTN: JOE DESJARDIN
(719) 476–0800
JDESJARDIN@PROTERRACO.COM

J·R ENGINEERING
A Westrian Company
Centennial 303–740–9393 • Colorado Springs 719–593–2593
Fort Collins 970–491–9888 • www.jrengineering.com

No.	REVISION	BY	DATE

H–SCALE	1"=20'
V–SCALE	1"=2'
DATE	12/15/21
DESIGNED BY	GVT
DRAWN BY	GVT
CHECKED BY	

CLOVERLEAF FILING 2

POND PLANS AND DETAILS

SHEET 14 OF 28

JOB NO. 25158.01

X:\2510000.all\2515801\Drawings\Sheet Dwgs\CDs\2515801P02.dwg, P2 Profile, 12/15/2021 6:20:20 AM, CS

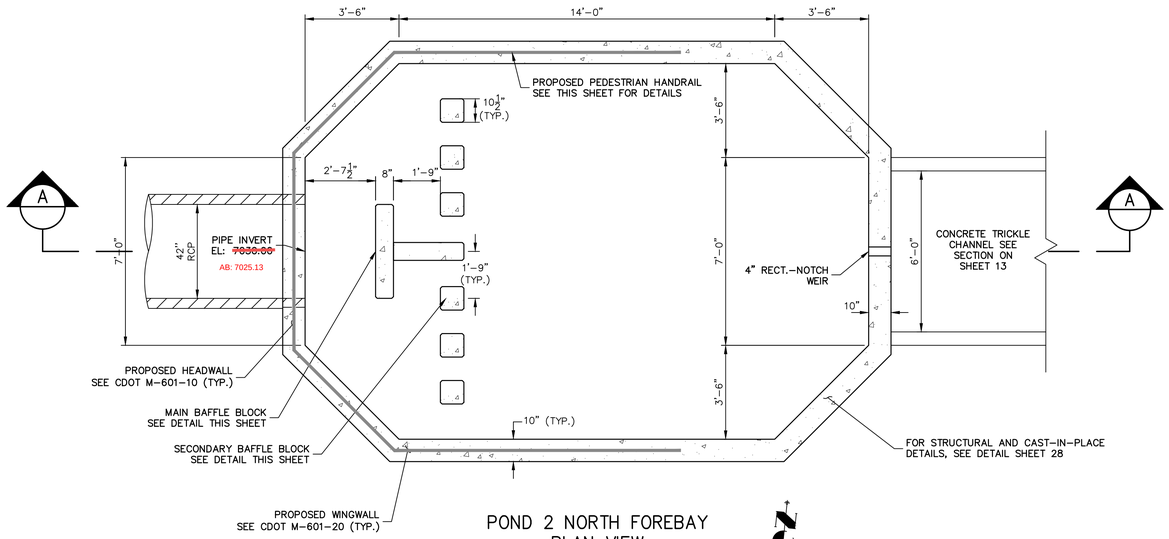

POND 2 NORTH FOREBAY PLAN VIEW

SCALE: 3/8"=1'

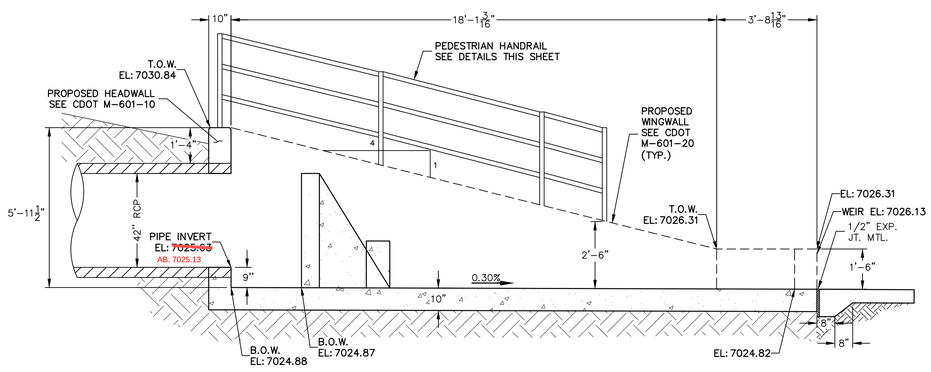

POND 2 NORTH FOREBAY CROSS SECTION A-A

SCALE: 3/8"=1'

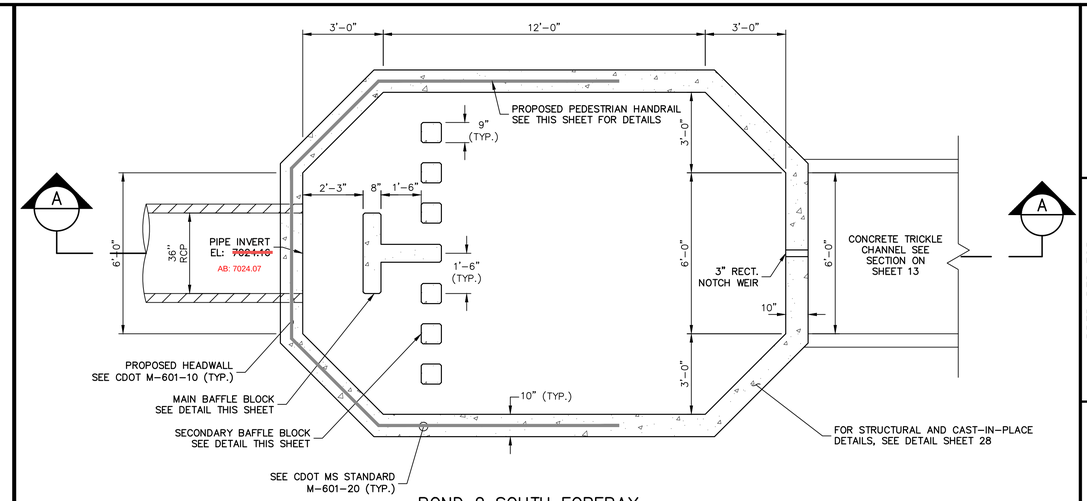

POND 2 SOUTH FOREBAY PLAN VIEW

SCALE: 3/8"=1'

AS-BUILTS
05/24/2023
SF-21-023

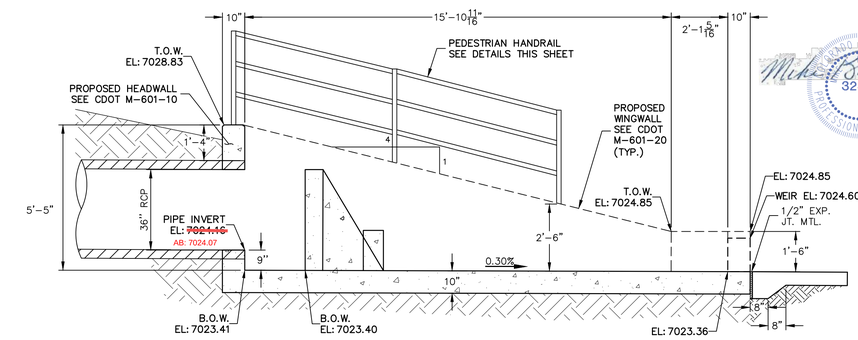

POND 2 SOUTH FOREBAY CROSS SECTION A-A

SCALE: 3/8"=1'

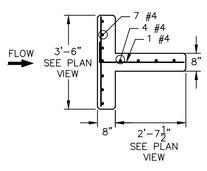

POND 2 NORTH FOREBAY MAIN BAFFLE BLOCK PLAN

SCALE: 3/8"=1'

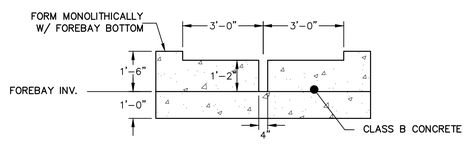

POND 2 NORTH FOREBAY SECTION AT WEIR

SCALE: 3/8"=1'

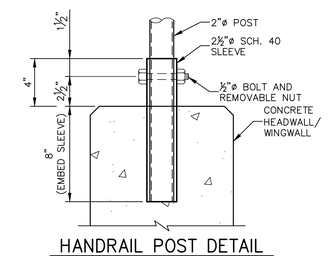

HANDRAIL POST DETAIL

SCALE: 1"=6"

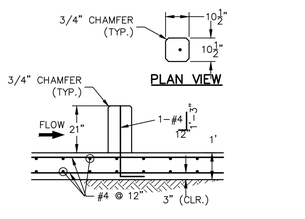

POND 2 NORTH FOREBAY SECONDARY BAFFLE BLOCK DETAILS

SCALE: 3/8"=1'

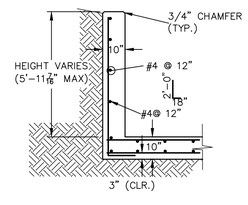

POND 2 NORTH FOREBAY WINGWALL REINFORCING DETAIL

SCALE: N.T.S.

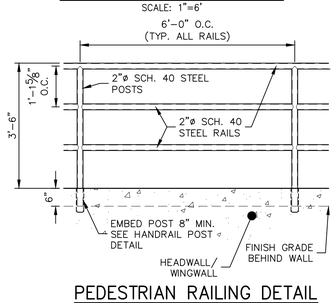

PEDESTRIAN RAILING DETAIL

SCALE: 1/2"=1'

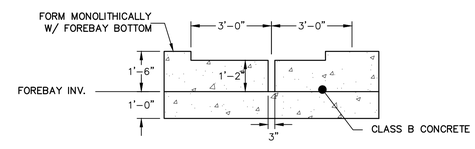

POND 2 SOUTH FOREBAY SECTION AT WEIR

SCALE: 3/8"=1'

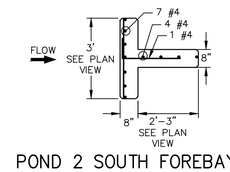

POND 2 SOUTH FOREBAY MAIN BAFFLE BLOCK PLAN

SCALE: 3/8"=1'

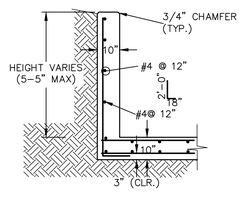

POND 2 SOUTH WINGWALL REINFORCING DETAIL

SCALE: N.T.S.

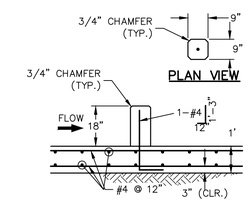

POND 2 SOUTH FOREBAY SECONDARY BAFFLE BLOCK DETAILS

SCALE: 3/8"=1'

EPC PCD 1/31/22

Know what's **below.** **Call** before you dig.

ENGINEER'S STATEMENT

PREPARED UNDER MY DIRECT SUPERVISION AND ON BEHALF OF JR ENGINEERING

MIKE A. BRAMLETT, P.E.
COLORADO P.E. 32314
FOR AND ON BEHALF OF JR ENGINEERING, LLC

DATE 12/15/21

COLORADO REGISTERED MIKE A. BRAMLETT 32314 PROFESSIONAL ENGINEER

UNTIL SUCH TIME AS THESE DRAWINGS ARE APPROVED BY THE APPROPRIATE REVIEWING AGENCIES, JR ENGINEERING APPROVES THEIR USE ONLY FOR THE PURPOSES DESIGNATED BY WRITTEN AUTHORIZATION.

PREPARED FOR
MONUMENT HILL CM LLC
1864 WOODMOOR DR, STE 100
COLORADO SPRINGS, CO 80920
ATTN: JOE DESJARDIN
(719) 476-0800
JDESJARDIN@PROTERRACO.COM

J·R ENGINEERING
A Westrian Company
Centennial 303-740-9393 • Colorado Springs 719-593-2593
Fort Collins 970-491-9888 • www.jrengineering.com

No.	REVISION	BY	DATE

H-SCALE	VARIES
V-SCALE	VARIES
DATE	12/15/21
DESIGNED BY	GAG
DRAWN BY	GAG
CHECKED BY	

CLOVERLEAF FILING 2

POND PLANS AND DETAILS

SHEET 15 OF 28

JOB NO. 25158.01

X:\2510000 all\25158\01\Drawings\Sheet Dwgs\CD\25158001P02-DT.dwg, P2-Forebay, 12/15/2021 6:29:36 AM, CS

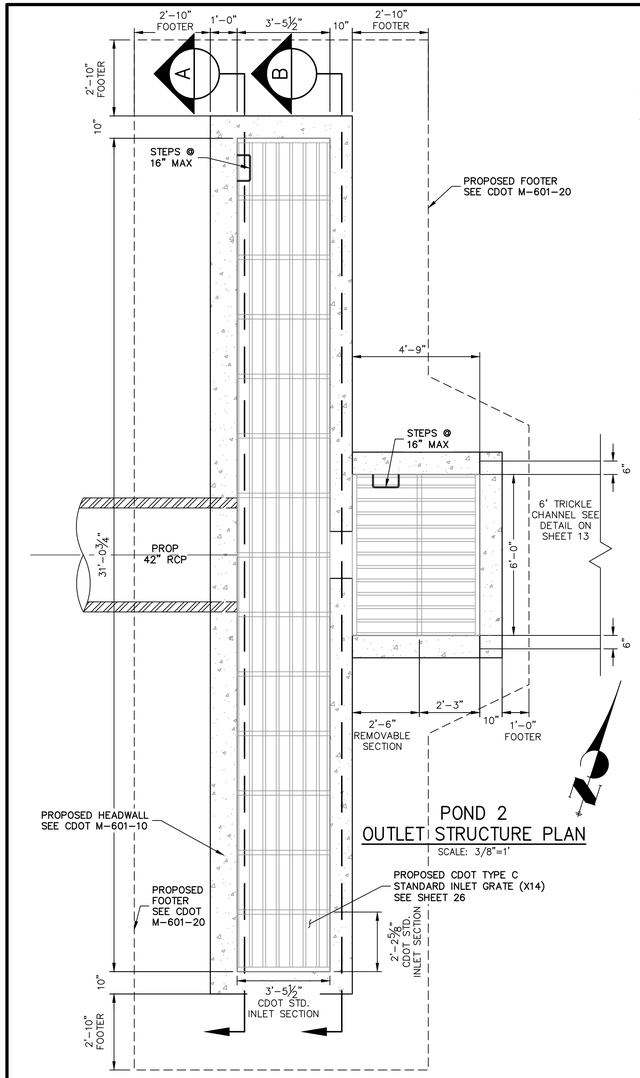

POND 2
OUTLET STRUCTURE PLAN
SCALE: 3/8"=1'

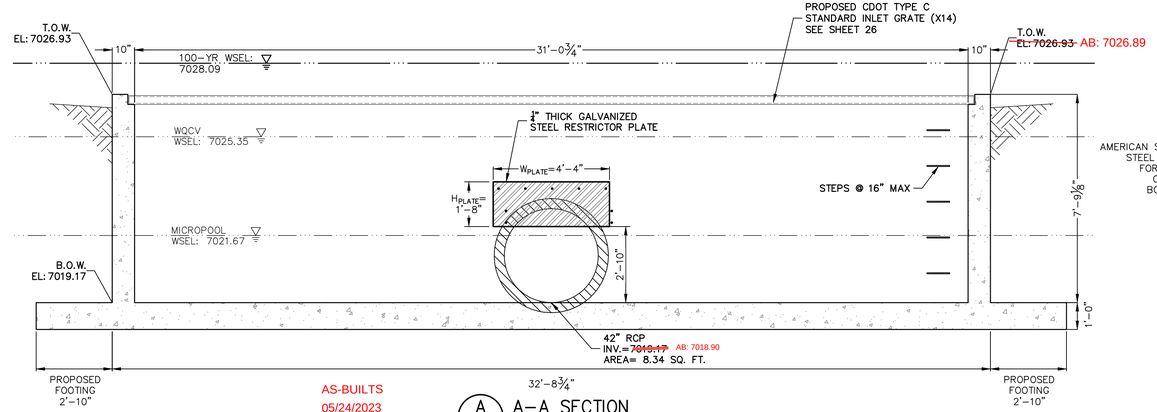

AS-BUILTS
05/24/2023
SF-21-023

A A–A SECTION
SCALE: 3/8"=1'

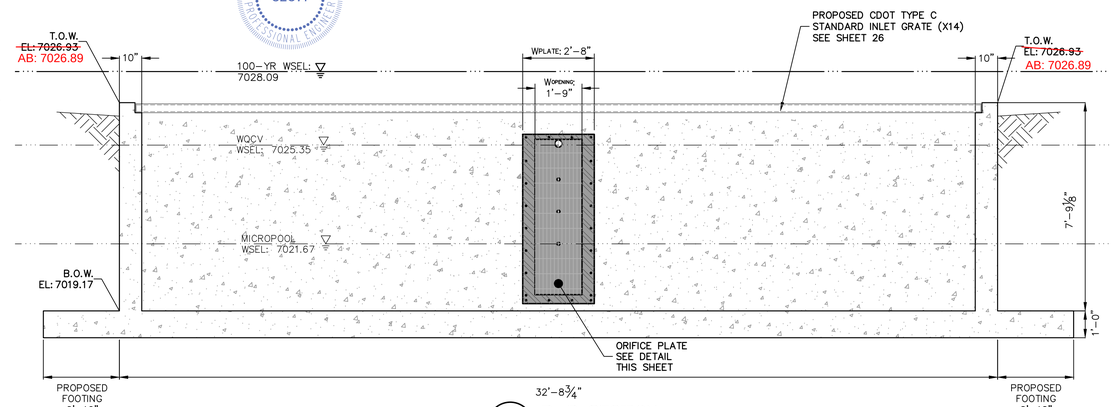

B B–B SECTION
SCALE: 3/8"=1'

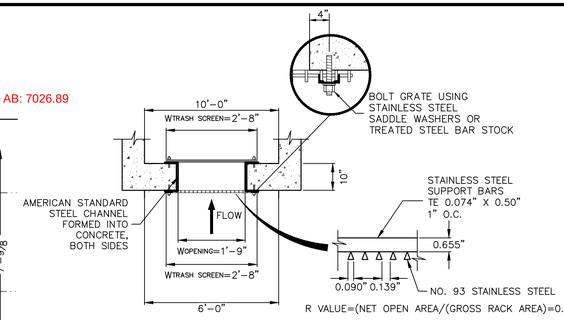

TRASH SCREEN AND PLATE DETAIL (PLAN)
N.T.S.

TRASH SCREEN DETAIL
N.T.S.

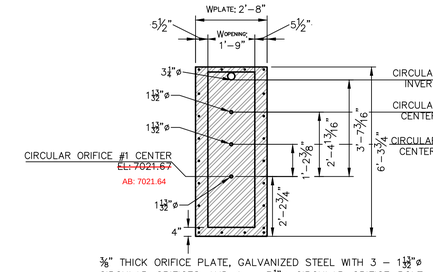

⅜" THICK ORIFICE PLATE, GALVANIZED STEEL WITH 3 – 1 13/32"ø CIRCULAR ORIFICES AND 1 – 3¼"ø CIRCULAR ORIFICE BOLT PLATE TO CONCRETE @ 10" O.C. MAX.
PROVIDE GASKET BETWEEN PLATE AND CONCRETE

ORIFICE PLATE DETAIL
SCALE: 3/8"=1'

POND 2 OUTLET STRUCTURE NOTES:

ORIFICE PLATE:

1. PROVIDE CONTINUOUS NEOPRENE GASKET MATERIAL BETWEEN THE ORIFICE PLATE AND CONCRETE AND BETWEEN THE RESTRICTOR PLATE AND CONCRETE.
2. BOLT PLATE TO CONCRETE 12" MAX. ON CENTER.

TRASH RACKS:

3. TRASH RACKS SHALL BE 1¼" SCH.40 STEEL PIPE, GALVANIZED, @ 6" CENTERS. SUPPORT BARS SHALL BE ¼"x2" STEEL RECTANGULAR BARS, GALVANIZED, @ 36". ALL TRASH RACKS SHALL BE MOUNTED USING STAINLESS STEEL HARDWARE.
4. REMOVABLE TRASH RACK SECTIONS SHALL BE MOUNTED USING STAINLESS STEEL HARDWARE AND PROVIDED WITH HINGED & LOCKABLE OR BOLTABLE ACCESS PANELS AS SHOWN ON THE PLANS.
5. STEEL TRASH RACKS SHALL BE HOT DIP GALVANIZED AND MAY BE HOT POWDER COATED AFTER GALVANIZING.
6. STRUCTURAL STEEL FOR GRATES, ORIFICE PLATES, AND BARS SHALL BE GALVANIZED AND SHALL BE IN ACCORDANCE WITH CDOT STANDARD SPECIFICATIONS, SUBSECTION 712.06.
7. ALL HARDWARE, BOLTS, AND FASTENERS SHALL BE STAINLESS STEEL.
8. CONTRACTOR SHALL SUBMIT SHOP DRAWINGS FOR ALL PLATES AND GRATING FOR ENGINEER'S APPROVAL PRIOR TO CONSTRUCTION.

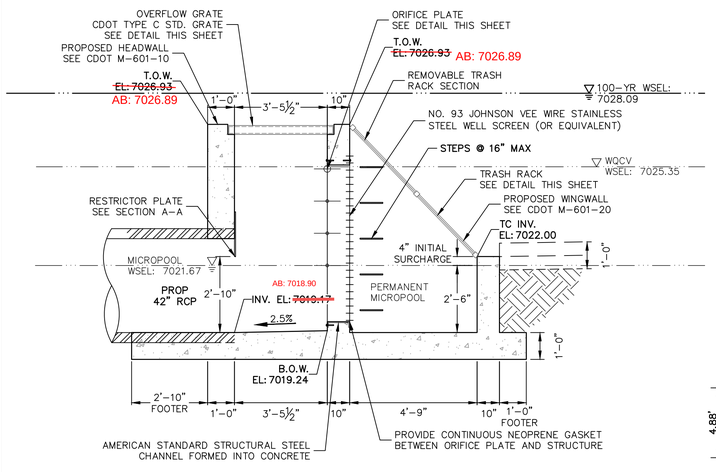

POND 2
OUTLET STRUCTURE PROFILE
SCALE: 3/8"=1'

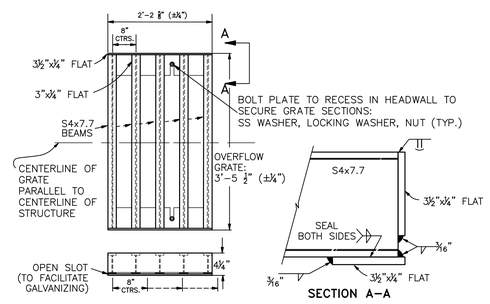

CDOT TYPE C STANDARD
OVERFLOW GRATE DETAILS
N.T.S.

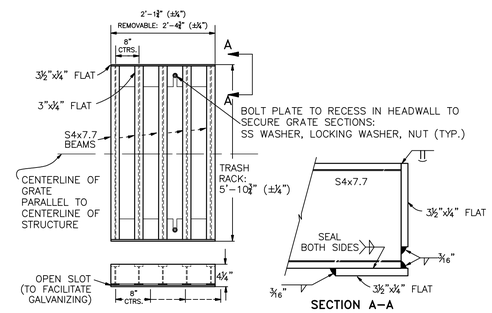

TRASH RACK DETAILS
N.T.S.

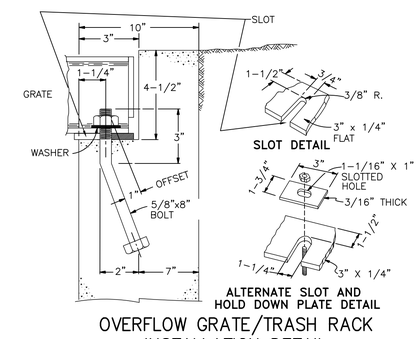

OVERFLOW GRATE/TRASH RACK
INSTALLATION DETAIL
N.T.S.

EPC PCD 1/31/22

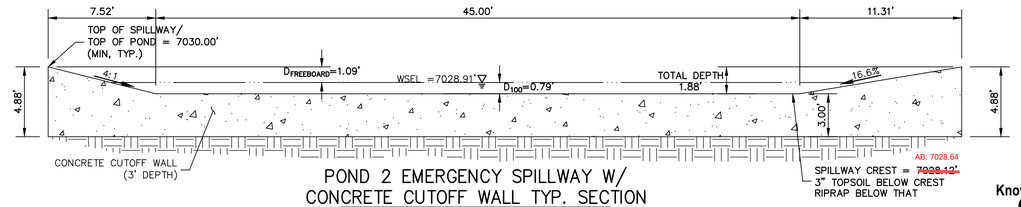

POND 2 EMERGENCY SPILLWAY W/
CONCRETE CUTOFF WALL TYP. SECTION
SCALE: 1"=5'

Know what's **below.**
Call before you dig.

ENGINEER'S STATEMENT

PREPARED UNDER MY DIRECT SUPERVISION AND ON BEHALF OF JR ENGINEERING

MIKE A. BRAMLETT, P.E.
COLORADO P.E. 32314
FOR AND ON BEHALF OF JR ENGINEERING, LLC

DATE 12/15/21

UNTIL SUCH TIME AS THESE DRAWINGS ARE APPROVED BY THE APPROPRIATE REVIEWING AGENCIES, JR ENGINEERING APPROVES THEIR USE ONLY FOR THE PURPOSES DESIGNATED BY WRITTEN AUTHORIZATION.

PREPARED FOR
MONUMENT HILL CM LLC
1864 WOODMOOR DR, STE 100
COLORADO SPRINGS, CO 80920
ATTN: JOE DESJARDIN
(719) 476-0800
JDESJARDIN@PROTERRACO.COM

J·R ENGINEERING
A Westrian Company
Centennial 303-740-9393 • Colorado Springs 719-593-2593
Fort Collins 970-491-9888 • www.jrengineering.com

No.	REVISION	BY	DATE

H-SCALE	3/8"=1'
V-SCALE	3/8"=1'
DATE	12/15/21
DESIGNED BY	GAG
DRAWN BY	GAG
CHECKED BY	

CLOVERLEAF FILING 2
POND PLANS AND DETAILS

SHEET 16 OF 28
JOB NO. 25158.01

X:\2510000.all\25158\01\Drawings\Sheet Dwgs\CDs\25158\01\P02-DT.dwg, P2-Outlet, 12/15/2021 11:12:08 AM, GS

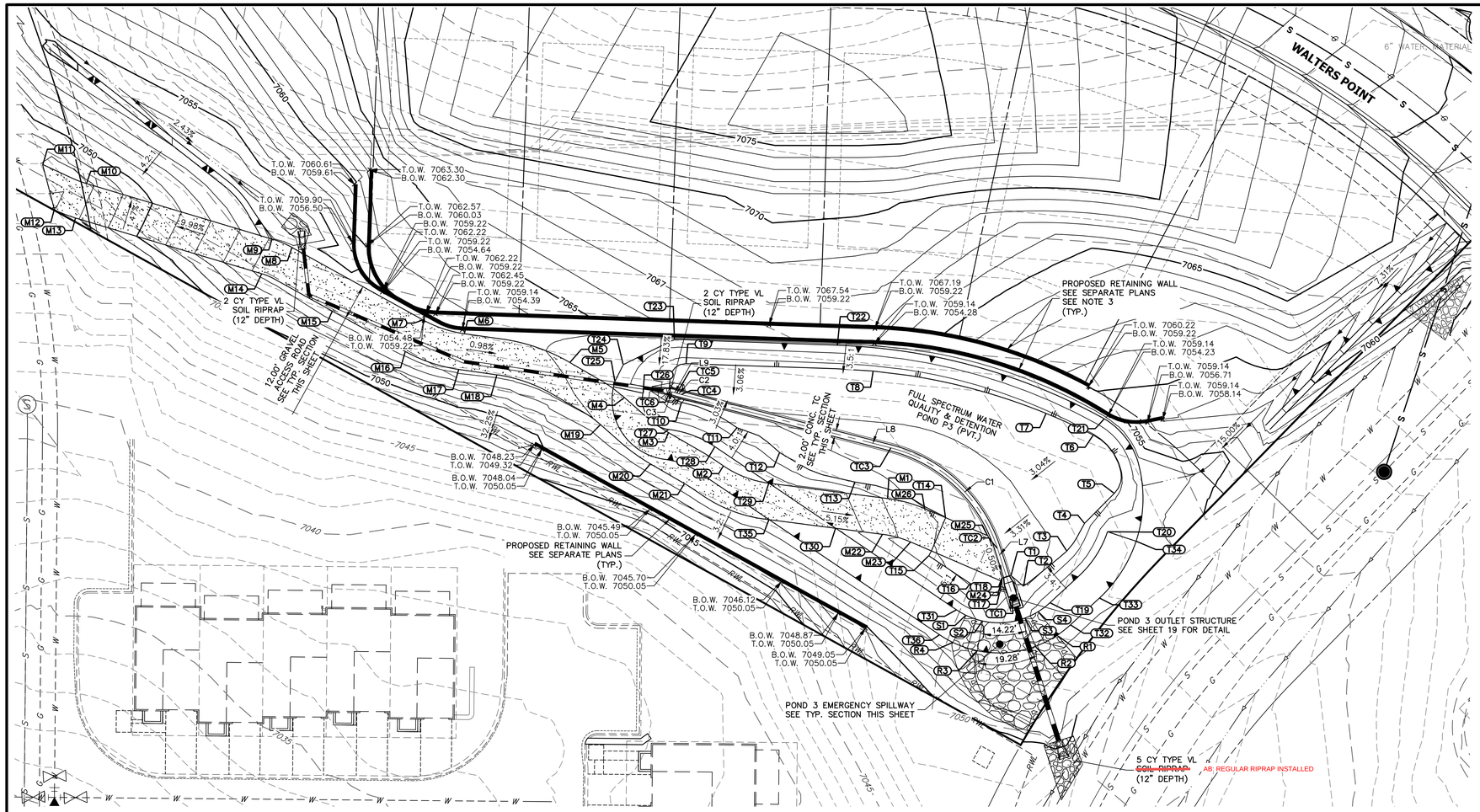

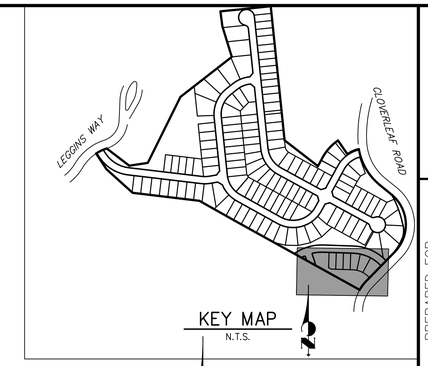

KEY MAP
N.T.S.

20 10 0 20 40
ORIGINAL SCALE: 1" = 20'

NOTES

1. ALL PROPOSED POND IMPROVEMENTS ARE PRIVATE UNLESS OTHERWISE NOTED.
2. SEE SHEETS 3–8 FOR PROPOSED STORM SEWER DESIGN.
3. CLOVERLEAF METROPOLITAN DISTRICT WILL OWN AND MAINTAIN ALL RETAINING WALLS WITHIN TRACTS. WALLS ON LOTS WILL BE OWNED AND MAINTAINED BY THE INDIVIDUAL LOT OWNER.

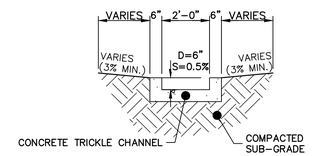

POND 3 TRICKLE CHANNEL
SCALE: 1"=3'

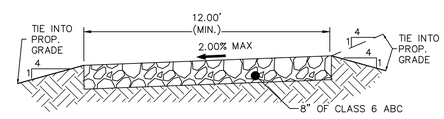

12' GRAVEL MAINTENANCE ACCESS ROAD TYPICAL SECTION
N.T.S.

POINT TABULATION			
ID NO.	DESCRIPTION	NORTHING/EASTING	ELEVATION
M1	MAINT. ROAD/TOP	N: 454988.78 E:187037.94	7051.84
M2	MAINT. ROAD	N: 454999.56 E:186983.63	7053.75
M3	MAINT. ROAD	N: 455010.61 E:186965.42	7053.75
M4	MAINT. ROAD	N: 455022.27 E:186950.74	7053.75
M5	MAINT. ROAD	N: 455033.95 E:186932.54	7053.91
M6	MAINT. ROAD	N: 455043.49 E:186897.47	7054.27
M7	MAINT. ROAD	N: 455048.04 E:186883.88	7054.41
M8	TOE/MAINT. ROAD	N: 455072.07 E:186840.47	7054.25
M9	TOE/MAINT. ROAD	N: 455074.85 E:186833.87	7054.11
M10	TOE/MAINT. ROAD	N: 455093.34 E:186772.12	7047.73
M11	TOE/MAINT. ROAD	N: 455099.65 E:186757.64	7047.94
M12	TOE/MAINT. ROAD	N: 455084.57 E:186761.60	7047.39
M13	TOE/MAINT. ROAD	N: 455081.85 E:186768.67	7047.89
M14	TOE/MAINT. ROAD	N: 455063.35 E:186830.42	7054.35
M15	TOE/MAINT. ROAD	N: 455050.93 E:186853.88	7054.92
M16	TOE/MAINT. ROAD	N: 455037.54 E:186878.07	7054.53
M17	TOE/MAINT. ROAD	N: 455031.61 E:186895.79	7054.47
M18	TOE/MAINT. ROAD	N: 455029.81 E:186908.46	7054.34
M19	TOE/MAINT. ROAD	N: 455013.27 E:186942.80	7053.95
M20	TOE/MAINT. ROAD	N: 455000.23 E:186959.40	7053.87

POINT TABULATION			
ID NO.	DESCRIPTION	NORTHING/EASTING	ELEVATION
M21	TOE/MAINT. ROAD	N: 454993.68 E:186970.70	7053.87
M22	TOE/MAINT. ROAD	N: 454976.88 E:187036.40	7052.44
M23	TOE/MAINT. ROAD	N: 454974.34 E:187045.70	7051.63
M24	TOE/MAINT. ROAD	N: 454961.31 E:187075.90	7050.51
M25	TOE/MAINT. ROAD	N: 454976.41 E:187071.33	7050.53
M26	TOE/MAINT. ROAD	N: 454985.37 E:187050.43	7051.03
R1	RIPRAP GRADEBREAK	N: 454943.10 E:187094.58	7053.75
R2	RIPRAP GRADEBREAK	N: 454939.69 E:187087.00	7052.50
R3	RIPRAP GRADEBREAK	N: 454938.26 E:187067.79	7052.50
R4	RIPRAP GRADEBREAK	N: 454941.01 E:187059.70	7053.75
S1	SPILLWAY AT TOP	N: 454950.02 E:187064.05	7053.75
S2	SPILLWAY AT CREST	N: 454948.12 E:187069.55	7052.50
S3	SPILLWAY AT CREST	N: 454949.07 E:187083.55	7052.50
S4	SPILLWAY AT TOP	N: 454951.18 E:187087.92	7053.75
T1	TOE/OUTLET	N: 454963.26 E:187078.92	7050.50
T2	TOE	N: 454959.69 E:187083.09	7051.21
T3	TOE	N: 454971.39 E:187097.55	7051.16
T4	TOE	N: 454980.59 E:187103.42	7051.38
T5	TOE	N: 454990.53 E:187113.28	7051.78
T6	TOE	N: 455009.80 E:187106.34	7051.92

POINT TABULATION			
ID NO.	DESCRIPTION	NORTHING/EASTING	ELEVATION
T7	TOE	N: 455016.99 E:187090.68	7051.72
T8	TOE	N: 455031.07 E:187033.32	7051.50
T9	TOE/MAINT. ROAD	N: 455033.53 E:186971.07	7051.41
T10	TOE/MAINT. ROAD	N: 455020.69 E:186969.70	7051.17
T11	TOE	N: 455012.24 E:186988.13	7051.16
T12	TOE	N: 455004.00 E:187002.27	7051.20
T13	TOE	N: 454994.23 E:187027.29	7051.15
T14	TOE	N: 454982.43 E:187057.29	7050.82
T15	TOE	N: 454969.77 E:187051.70	7051.07
T16	TOE	N: 454960.52 E:187065.54	7050.83
T17	TOE	N: 454957.46 E:187075.29	7051.26
T18	TOE/OUTLET	N: 454962.35 E:187076.06	7050.50
T19	TOP	N: 454954.16 E:187091.86	7053.75
T20	TOP	N: 454977.75 E:187110.99	7053.75
T21	TOP	N: 455015.21 E:187109.99	7053.75
T22	TOP	N: 455039.65 E:187021.29	7053.75
T23	TOP	N: 455041.60 E:186967.35	7053.75
T24	TOP	N: 455033.24 E:186950.35	7053.75
T25	TOP	N: 455027.72 E:186947.58	7053.75
T26	TOP	N: 455023.74 E:186956.85	7053.75

POINT TABULATION			
ID NO.	DESCRIPTION	NORTHING/EASTING	ELEVATION
T27	TOP	N: 455011.69 E:186965.42	7053.75
T28	TOP	N: 455005.95 E:186980.79	7053.75
T29	TOP	N: 454993.86 E:186998.68	7053.75
T30	TOP	N: 454978.89 E:187020.83	7053.75
T31	TOP	N: 454951.82 E:187060.91	7053.75
T32	TOP	N: 454946.81 E:187098.65	7053.75
T33	TOP	N: 454955.72 E:187108.30	7053.75
T34	TOP	N: 454974.60 E:187120.48	7053.75
T35	TOP	N: 454981.75 E:186998.74	7053.75
T36	TOP	N: 454943.53 E:187055.32	7053.75
TC1	TRICKLE CHANNEL	N: 454956.40 E:187079.53	7052.04
TC2	TRICKLE CHANNEL	N: 454972.28 E:187074.48	7050.05
TC3	TRICKLE CHANNEL	N: 455005.57 E:187039.18	7050.30
TC4	TRICKLE CHANNEL	N: 455023.33 E:186969.50	7050.66
TC5	TRICKLE CHANNEL	N: 455023.73 E:186968.01	7050.67
TC6	TRICKLE CHANNEL	N: 455024.26 E:186965.82	7050.68

LINE TABLE		
LINE	BEARING	DISTANCE
L7	S17°39'02"E	16.66'
L8	S75°42'05"E	71.91'
L9	S73°55'52"E	0.88'

CURVE TABLE			
CURVE	DELTA	RADIUS	LENGTH
C1	58°03'03"	50.00'	50.66'
C2	1°46'13"	50.00'	1.54'
C3	7°47'49"	10.12'	1.38'

AS-BUILTS
05/24/2023
SF-21-023

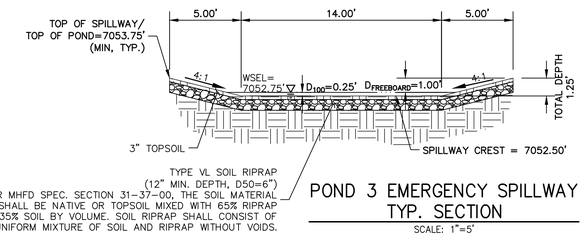

POND 3 EMERGENCY SPILLWAY TYP. SECTION
SCALE: 1"=5'

Know what's **below.**
Call before you dig.

EPC PCD 1/31/22

THE LOCATIONS OF EXISTING ABOVE GROUND AND UNDERGROUND UTILITIES ARE SHOWN IN AN APPROXIMATE WAY ONLY. THE CONTRACTOR SHALL DETERMINE THE EXACT LOCATION OF ALL EXISTING UTILITIES BEFORE COMMENCING WORK. THE CONTRACTOR SHALL BE FULLY RESPONSIBLE FOR ANY AND ALL DAMAGES WHICH MIGHT BE CAUSED BY HIS FAILURE TO EXACTLY LOCATE AND PRESERVE ANY AND ALL ABOVE GROUND AND UNDERGROUND UTILITIES.

ENGINEER'S STATEMENT

PREPARED UNDER MY DIRECT SUPERVISION AND ON BEHALF OF JR ENGINEERING

MIKE A. BRAMLETT, P.E.
COLORADO P.E. 32314
FOR AND ON BEHALF OF JR ENGINEERING, LLC

DATE 12/15/21

UNTIL SUCH TIME AS THESE DRAWINGS ARE APPROVED BY THE APPROPRIATE REVIEWING AGENCIES, JR ENGINEERING APPROVES THEIR USE ONLY FOR THE PURPOSES DESIGNATED BY WRITTEN AUTHORIZATION.

PREPARED FOR
MONUMENT HILL CM LLC
1864 WOODMOOR DR, STE 100
COLORADO SPRINGS, CO 80920
ATTN: JOE DESJARDIN
(719) 476–0800
JDESJARDIN@PROTERRACO.COM

J·R ENGINEERING
A Westrian Company
Centennial 303–740–9393 • Colorado Springs 719–593–2593
Fort Collins 970–491–9888 • www.jrengineering.com

No.	REVISION	BY	DATE

H–SCALE	1"=20'
V–SCALE	N/A
DATE	12/15/21
DESIGNED BY	GVT
DRAWN BY	GVT
CHECKED BY	

CLOVERLEAF FILING 2
POND PLANS AND DETAILS

SHEET 17 OF 28
JOB NO. 25158.01

X:\2510000.all\25158\01\Drawings\Sheet Dwgs\CDs\25158\01PD3.dwg, P3 Plan, 12/15/2021 11:13:24 AM, CS

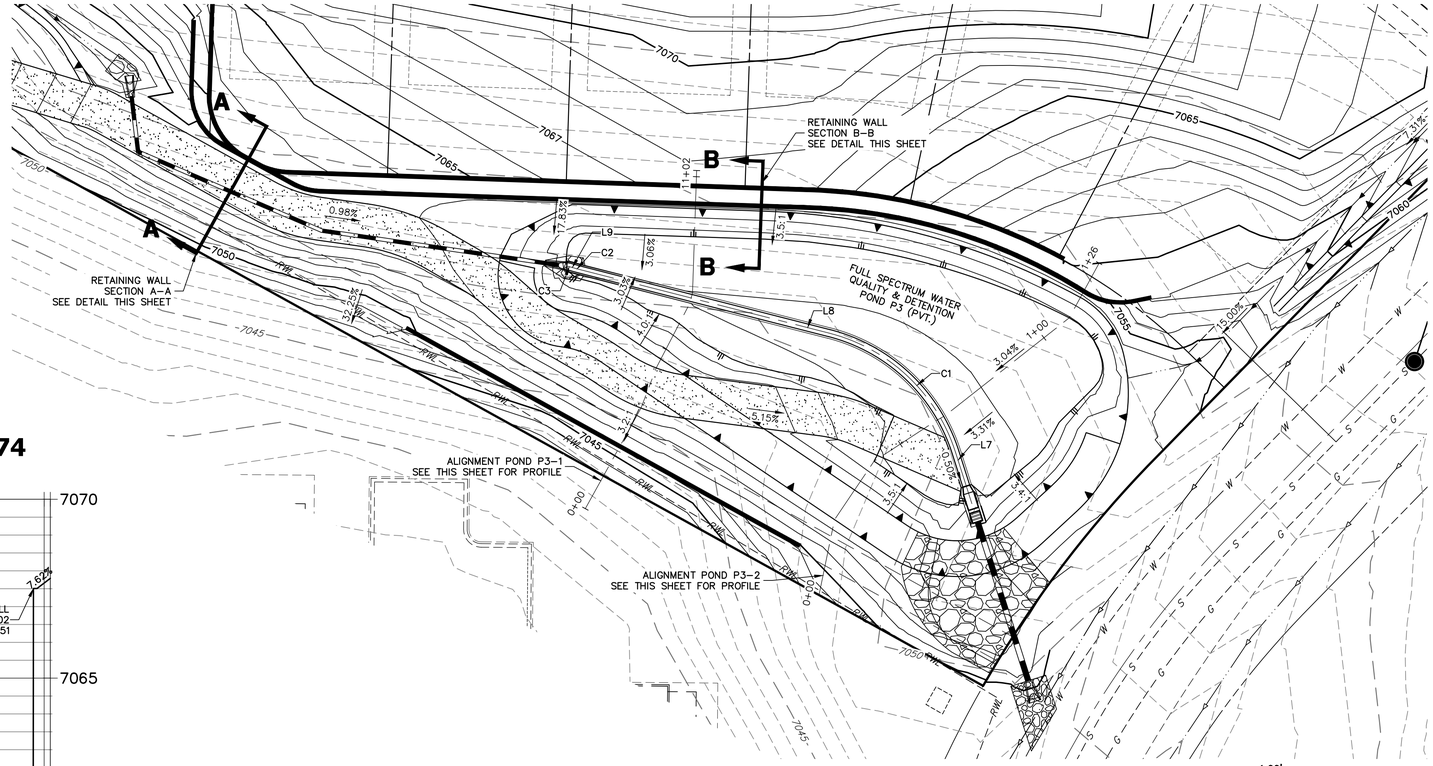

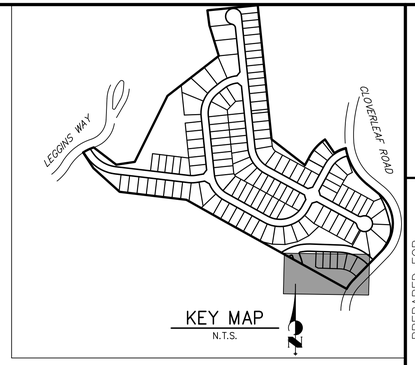

UNTIL SUCH TIME AS THESE DRAWINGS ARE APPROVED BY THE APPROPRIATE REVIEWING AGENCIES, JR ENGINEERING APPROVES THEIR USE ONLY FOR THE PURPOSES DESIGNATED BY WRITTEN AUTHORIZATION.

PREPARED FOR

MONUMENT HILL CM LLC
1864 WOODMOOR DR, STE 100
COLORADO SPRINGS, CO 80920
ATTN: JOE DESJARDIN
(719) 476–0800
JDESJARDIN@PROTERRACO.COM

AS-BUILTS
05/24/2023
SF-21-023

Mike Bramlett
32314
COLORADO REGISTERED PROFESSIONAL ENGINEER

J·R ENGINEERING
A Westrian Company
Centennial 303–740–9393 • Colorado Springs 719–593–2593
Fort Collins 970–491–9888 • www.jrengineering.com

POND P3-1 PROFILE
STA 0+00.00 TO 1+01.74

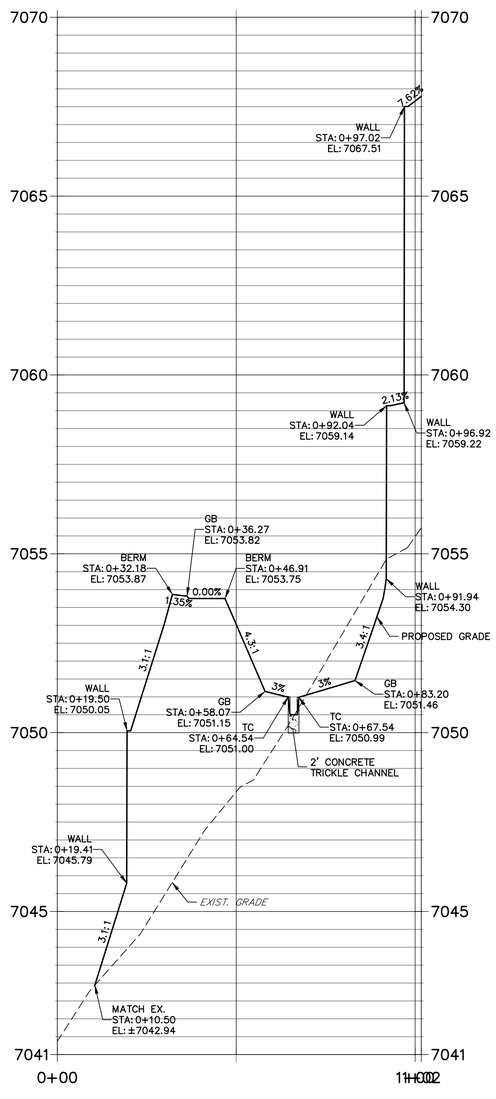

POND P3-2 PROFILE
STA 0+00.00 TO 1+26.44

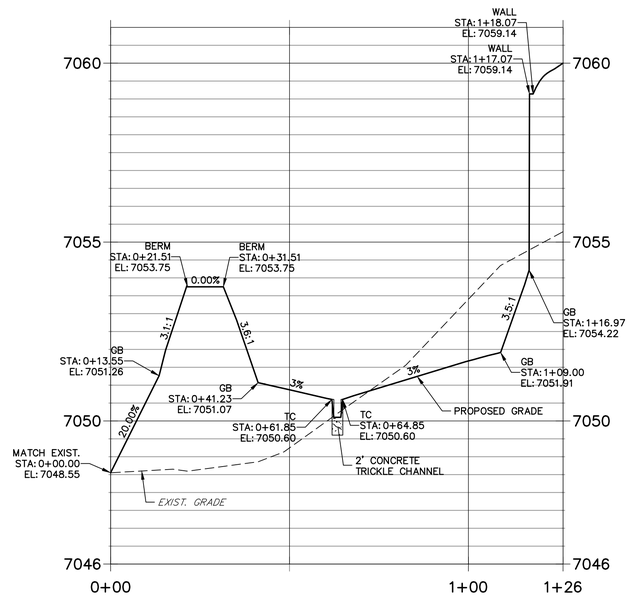

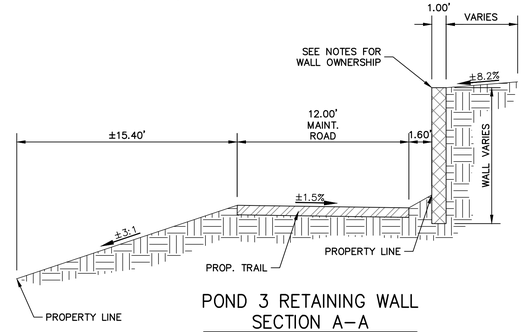

POND 3 RETAINING WALL
SECTION A–A
SCALE: 1"=5'

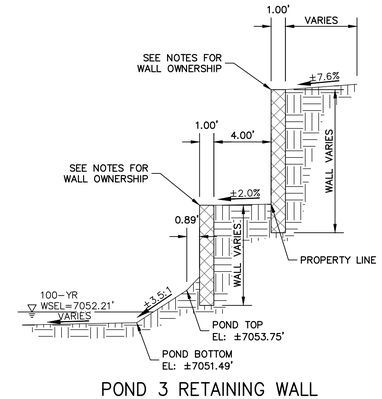

POND 3 RETAINING WALL
SECTION B–B
SCALE: 1"=5'

20 10 0 20 40

HORIZONTAL
ORIGINAL SCALE: 1" = 20'
VERTICAL
ORIGINAL SCALE: 1" = 2'

NOTES

1. ALL PROPOSED POND IMPROVEMENTS ARE PRIVATE UNLESS OTHERWISE NOTED.
2. SEE SHEETS 3–8 FOR PROPOSED STORM SEWER DESIGN.
3. CLOVERLEAF METROPOLITAN DISTRICT WILL OWN AND MAINTAIN ALL RETAINING WALLS WITHIN TRACTS. WALLS ON LOTS WILL BE OWNED AND MAINTAINED BY THE INDIVIDUAL LOT OWNER.

THE LOCATIONS OF EXISTING ABOVE GROUND AND UNDERGROUND UTILITIES ARE SHOWN IN AN APPROXIMATE WAY ONLY. THE CONTRACTOR SHALL DETERMINE THE EXACT LOCATION OF ALL EXISTING UTILITIES BEFORE COMMENCING WORK. THE CONTRACTOR SHALL BE FULLY RESPONSIBLE FOR ANY AND ALL DAMAGES WHICH MIGHT BE CAUSED BY HIS FAILURE TO EXACTLY LOCATE AND PRESERVE ANY AND ALL ABOVE GROUND AND UNDERGROUND UTILITIES.

811
Know what's **below.**
Call before you dig.

EPC PCD 1/31/22

ENGINEER'S STATEMENT

PREPARED UNDER MY DIRECT SUPERVISION AND ON BEHALF OF JR ENGINEERING

Mike Bramlett 12/15/21

MIKE A. BRAMLETT, P.E.
COLORADO P.E. 32314
FOR AND ON BEHALF OF JR ENGINEERING, LLC

DATE

COLORADO REGISTERED PROFESSIONAL ENGINEER MIKE A. BRAMLETT 32314

No.	REVISION	BY	DATE

H–SCALE	1"=20'
V–SCALE	1"=2'
DATE	12/15/21
DESIGNED BY	GVT
DRAWN BY	GVT
CHECKED BY	

CLOVERLEAF FILING 2

POND PLANS AND DETAILS

SHEET 18 OF 28

JOB NO. 25158.01

X:\2510000.all\2515801\Drawings\Sheet Dwgs\CDs\2515801P03.dwg, P3 Profile, 12/15/2021 6:31:57 AM, CS

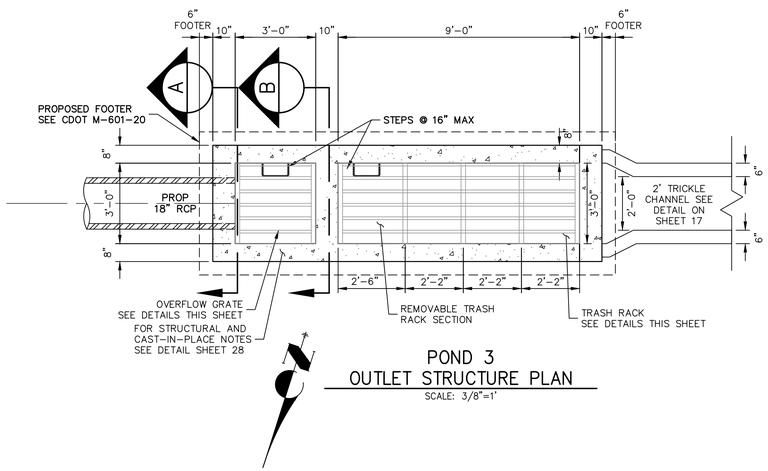

POND 3
OUTLET STRUCTURE PLAN
SCALE: 3/8"=1'

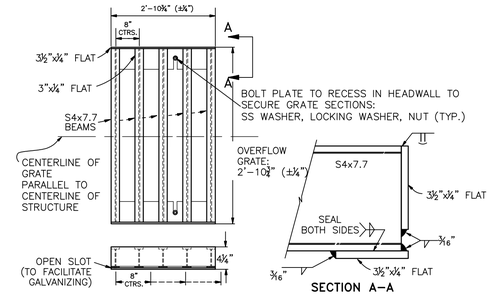

OVERFLOW GRATE DETAILS
N.T.S.

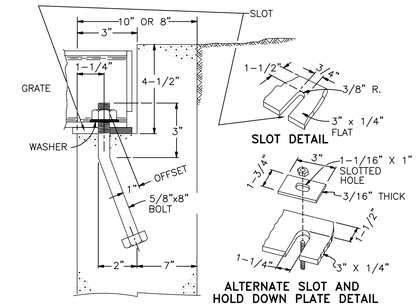

OVERFLOW GRATE/TRASH RACK
INSTALLATION DETAIL
N.T.S.

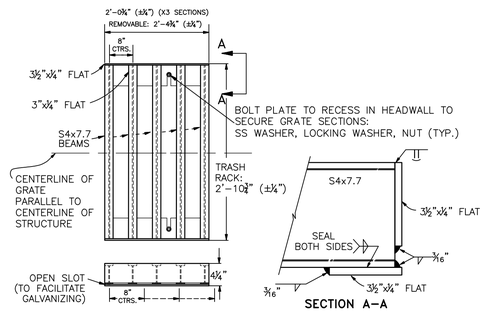

TRASH RACK DETAILS
N.T.S.

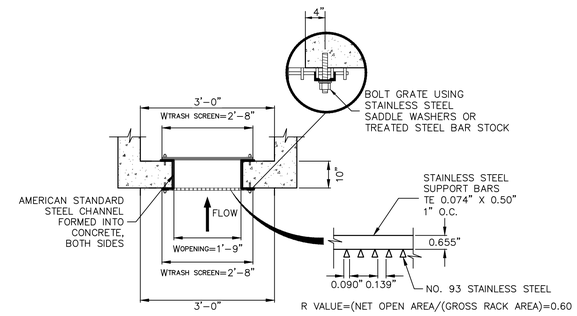

TRASH SCREEN DETAIL
N.T.S.

TRASH SCREEN AND PLATE
DETAIL (PLAN)
N.T.S.

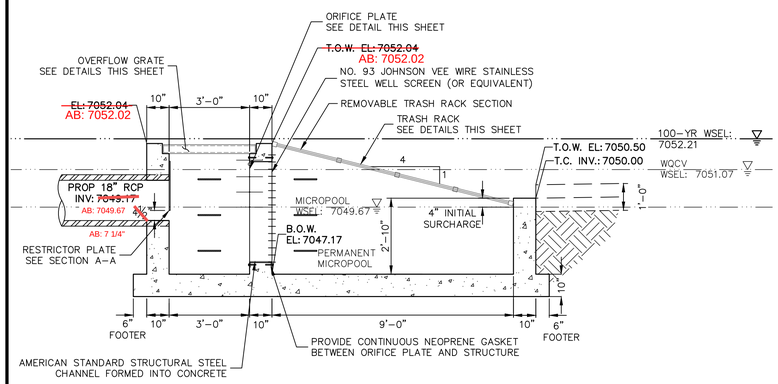

POND 3
OUTLET STRUCTURE PROFILE
SCALE: 3/8"=1'

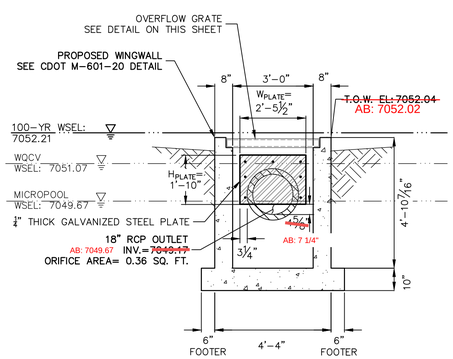

A A-A SECTION
SCALE: 3/8"=1'

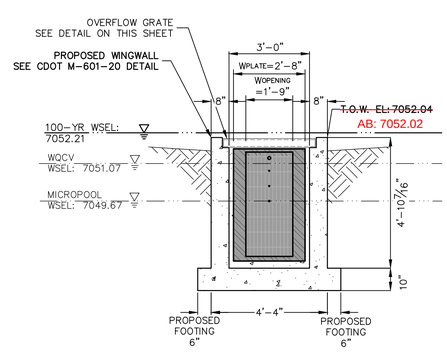

B B-B SECTION
SCALE: 3/8"=1'

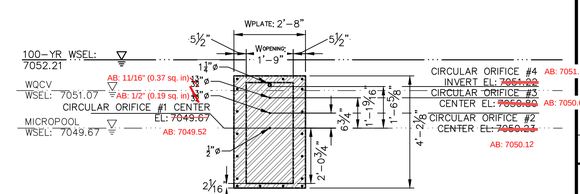

¼" THICK ORIFICE PLATE, GALVANIZED STEEL WITH 1 – ¾"ø CIRCULAR ORIFICE, 2– 13/16"ø CIRCULAR ORIFICES, AND 1 – 1¾" CIRCULAR ORIFICE BOLT PLATE TO CONCRETE @ 10" O.C. MAX. PROVIDE GASKET BETWEEN PLATE AND CONCRETE

ORIFICE PLATE DETAIL
SCALE: 3/8"=1'

POND 3 OUTLET STRUCTURE NOTES:

ORIFICE PLATE:

1. PROVIDE CONTINUOUS NEOPRENE GASKET MATERIAL BETWEEN THE ORIFICE PLATE AND CONCRETE AND BETWEEN THE RESTRICTOR PLATE AND CONCRETE.
2. BOLT PLATE TO CONCRETE 12" MAX. ON CENTER.

TRASH RACKS:

3. TRASH RACKS SHALL BE 1¼" SCH.40 STEEL PIPE, GALVANIZED, @ 6" CENTERS. SUPPORT BARS SHALL BE ¼"×2" STEEL RECTANGULAR BARS, GALVANIZED, @ 36". ALL TRASH RACKS SHALL BE MOUNTED USING STAINLESS STEEL HARDWARE.
4. REMOVABLE TRASH RACK SECTIONS SHALL BE MOUNTED USING STAINLESS STEEL HARDWARE AND PROVIDED WITH HINGED & LOCKABLE OR BOLTABLE ACCESS PANELS AS SHOWN ON THE PLANS.
5. STEEL TRASH RACKS SHALL BE HOT DIP GALVANIZED AND MAY BE HOT POWDER COATED AFTER GALVANIZING.
6. STRUCTURAL STEEL FOR GRATES, ORIFICE PLATES, AND BARS SHALL BE GALVANIZED AND SHALL BE IN ACCORDANCE WITH CDOT STANDARD SPECIFICATIONS, SUBSECTION 712.06.
7. ALL HARDWARE, BOLTS, AND FASTENERS SHALL BE STAINLESS STEEL.
8. CONTRACTOR SHALL SUBMIT SHOP DRAWINGS FOR ALL PLATES AND GRATING FOR ENGINEER'S APPROVAL PRIOR TO CONSTRUCTION.

AS-BUILTS
05/24/2023
SF-21-023

EPC PCD 1/31/22

811 Know what's below. Call before you dig.

ENGINEER'S STATEMENT

PREPARED UNDER MY DIRECT SUPERVISION AND ON BEHALF OF JR ENGINEERING

12/15/21

MIKE A. BRAMLETT, P.E. — DATE
COLORADO P.E. 32314
FOR AND ON BEHALF OF JR ENGINEERING, LLC

UNTIL SUCH TIME AS THESE DRAWINGS ARE APPROVED BY THE APPROPRIATE REVIEWING AGENCIES, JR ENGINEERING APPROVES THEIR USE ONLY FOR THE PURPOSES DESIGNATED BY WRITTEN AUTHORIZATION.

PREPARED FOR
MONUMENT HILL CM LLC
1864 WOODMOOR DR, STE 100
COLORADO SPRINGS, CO 80920
ATTN: JOE DESJARDIN
(719) 476-0800
JDESJARDIN@PROTERRACO.COM

J·R ENGINEERING
A Westrian Company
Centennial 303-740-9393 • Colorado Springs 719-593-2593
Fort Collins 970-491-9888 • www.jrengineering.com

No.	REVISION	BY	DATE

H-SCALE	3/8"=1"
V-SCALE	3/8"=1"
DATE	12/15/21
DESIGNED BY	GAG
DRAWN BY	GAG
CHECKED BY	

CLOVERLEAF FILING 2

POND PLANS AND DETAILS

SHEET 19 OF 28

JOB NO. 25158.01

X:\2510000.all\2515801\Drawings\Sheet Dwgs\Ch\2515801P03-DT.dwg, P3-Outlet, 12/15/2021 6:32:42 AM, CS

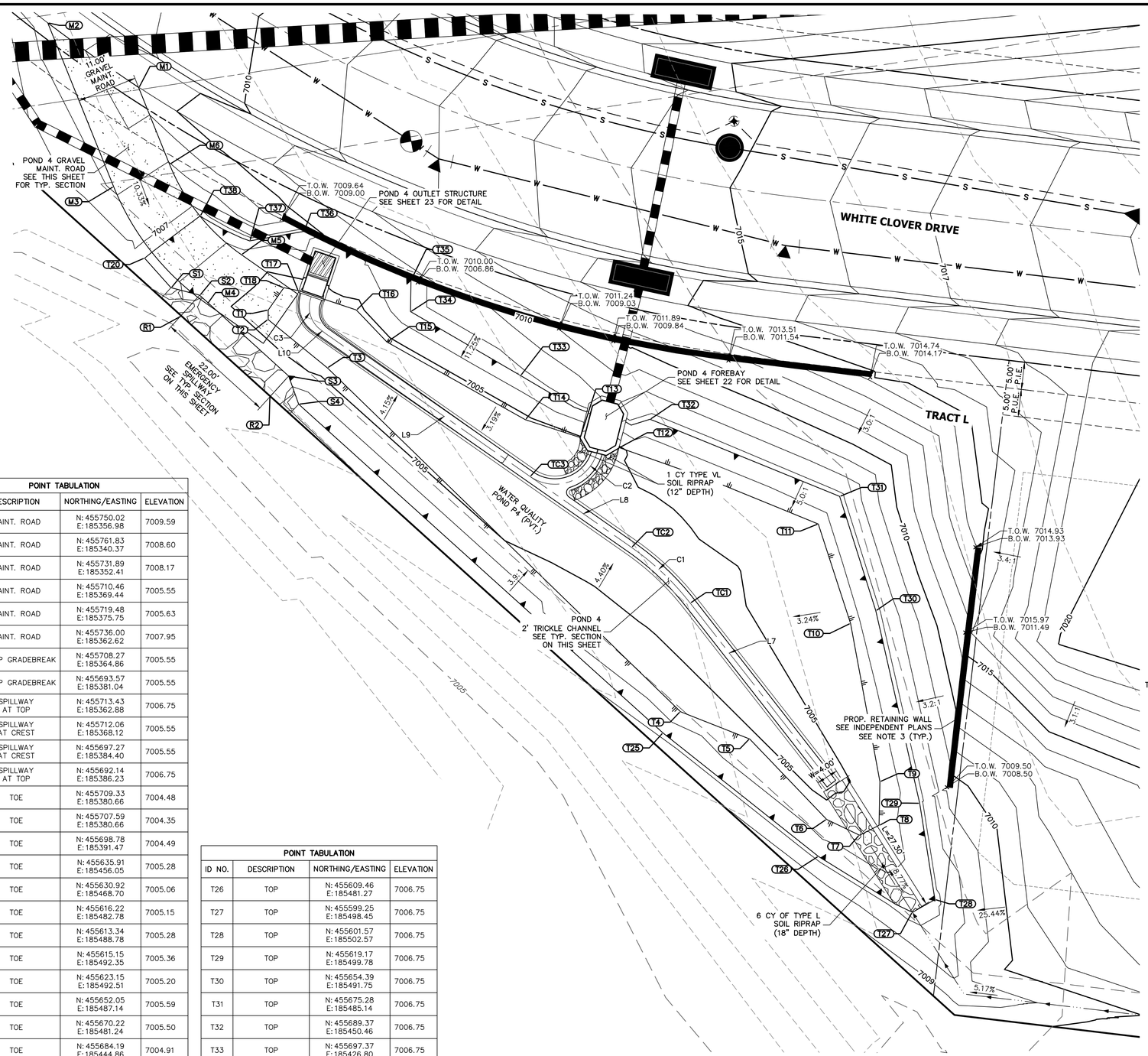

POND 4- PLAN

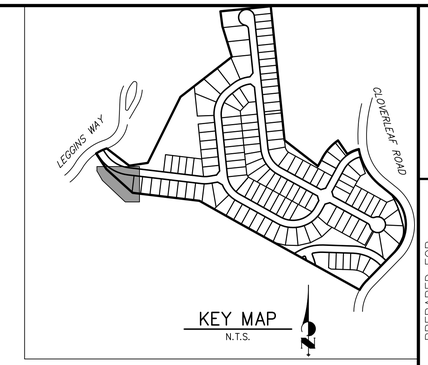

KEY MAP
N.T.S.

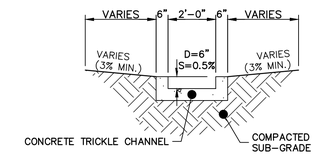

POND 4 TRICKLE CHANNEL
SCALE: 1"=3'

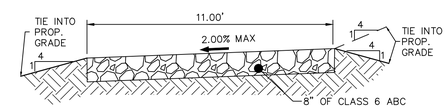

11' GRAVEL MAINTENANCE ACCESS ROAD TYPICAL SECTION
N.T.S.

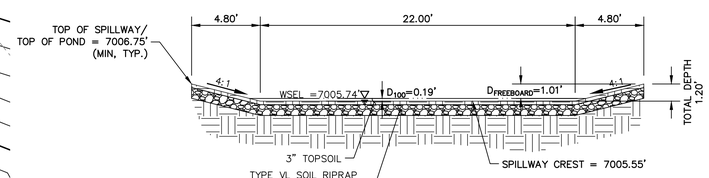

POND 4 EMERGENCY SPILLWAY TYP. SECTION
SCALE: 1"=5'

POINT TABULATION			
ID NO.	DESCRIPTION	NORTHING/EASTING	ELEVATION
M1	MAINT. ROAD	N: 455750.02 E: 185356.98	7009.59
M2	MAINT. ROAD	N: 455761.83 E: 185340.37	7008.60
M3	MAINT. ROAD	N: 455731.89 E: 185352.41	7008.17
M4	MAINT. ROAD	N: 455710.46 E: 185369.44	7005.55
M5	MAINT. ROAD	N: 455719.48 E: 185375.75	7005.63
M6	MAINT. ROAD	N: 455736.00 E: 185362.62	7007.95
R1	RIPRAP GRADEBREAK	N: 455708.27 E: 185364.86	7005.55
R2	RIPRAP GRADEBREAK	N: 455693.57 E: 185381.04	7005.55
S1	SPILLWAY AT TOP	N: 455713.43 E: 185362.88	7006.75
S2	SPILLWAY AT CREST	N: 455712.06 E: 185368.12	7005.55
S3	SPILLWAY AT TOP	N: 455697.27 E: 185384.40	7005.55
S4	SPILLWAY AT TOP	N: 455692.14 E: 185386.23	7006.75
T1	TOE	N: 455709.33 E: 185380.66	7004.48
T2	TOE	N: 455707.59 E: 185380.66	7004.35
T3	TOE	N: 455698.78 E: 185391.47	7004.49
T4	TOE	N: 455635.91 E: 185456.05	7005.28
T5	TOE	N: 455630.92 E: 185468.70	7005.06
T6	TOE	N: 455616.22 E: 185482.78	7005.15
T7	TOE	N: 455613.34 E: 185488.78	7005.28
T8	TOE	N: 455615.15 E: 185492.35	7005.36
T9	TOE	N: 455623.15 E: 185492.51	7005.20
T10	TOE	N: 455652.05 E: 185487.14	7005.59
T11	TOE	N: 455670.22 E: 185481.24	7005.50
T12	TOE	N: 455684.19 E: 185444.86	7004.91
T13	TOE	N: 455686.05 E: 185437.70	7004.92
T14	TOE	N: 455689.31 E: 185427.66	7004.75
T15	TOE	N: 455703.50 E: 185402.36	7004.73
T16	TOE	N: 455709.36 E: 185396.77	7004.70
T17	TOE	N: 455712.88 E: 185386.20	7004.34
T18	TOE	N: 455713.43 E: 185383.53	7004.54
T20	TOP	N: 455718.82 E: 185358.07	7006.75
T25	TOP	N: 455632.02 E: 185452.86	7006.75

POINT TABULATION			
ID NO.	DESCRIPTION	NORTHING/EASTING	ELEVATION
T26	TOP	N: 455609.46 E: 185481.27	7006.75
T27	TOP	N: 455599.25 E: 185498.45	7006.75
T28	TOP	N: 455601.57 E: 185502.57	7006.75
T29	TOP	N: 455619.17 E: 185499.78	7006.75
T30	TOP	N: 455654.39 E: 185491.75	7006.75
T31	TOP	N: 455675.28 E: 185485.14	7006.75
T32	TOP	N: 455689.37 E: 185450.46	7006.75
T33	TOP	N: 455697.37 E: 185426.80	7006.75
T34	TOP	N: 455709.06 E: 185406.69	7006.75
T35	TOP	N: 455714.85 E: 185406.77	7006.75
T36	TOP	N: 455723.72 E: 185387.16	7006.75
T37	TOP	N: 455721.98 E: 185377.28	7006.75
T38	TOP	N: 455726.53 E: 185368.21	7006.75
TC1	TRICKLE CHANNEL	N: 455655.80 E: 185457.80	7004.22
TC2	TRICKLE CHANNEL	N: 455665.97 E: 185447.07	7004.14
TC3	TRICKLE CHANNEL	N: 455678.94 E: 185428.51	7004.03

LINE TABLE		
LINE	BEARING	DISTANCE
L7	S38°02'12"E	41.93'
L8	S55°02'56"E	22.64'
L9	S55°02'56"E	45.61'
L10	S52°30'58"E	1.00'

CURVE TABLE			
CURVE	DELTA	RADIUS	LENGTH
C1	17°00'45"	50.00'	14.85'
C2	108°16'49"	8.00'	15.12'
C3	76°09'24"	5.16'	6.86'

NOTES

1. ALL PROPOSED POND IMPROVEMENTS ARE PRIVATE UNLESS OTHERWISE NOTED.
2. SEE SHEETS 3-8 FOR PROPOSED STORM SEWER DESIGN.
3. CLOVERLEAF METROPOLITAN DISTRICT WILL OWN AND MAINTAIN ALL RETAINING WALLS WITHIN TRACTS. WALLS ON LOTS WILL BE OWNED AND MAINTAINED BY THE INDIVIDUAL LOT OWNER.

AS-BUILTS
05/24/2023
SF-21-023

Mike Bramlett
32314
PROFESSIONAL ENGINEER

Know what's below. Call before you dig.

N

10 5 0 10 20
ORIGINAL SCALE: 1" = 10'

EPC PCD 1/31/22

THE LOCATIONS OF EXISTING ABOVE GROUND AND UNDERGROUND UTILITIES ARE SHOWN IN AN APPROXIMATE WAY ONLY. THE CONTRACTOR SHALL DETERMINE THE EXACT LOCATION OF ALL EXISTING UTILITIES BEFORE COMMENCING WORK. THE CONTRACTOR SHALL BE FULLY RESPONSIBLE FOR ANY AND ALL DAMAGES WHICH MIGHT BE CAUSED BY HIS FAILURE TO EXACTLY LOCATE AND PRESERVE ANY AND ALL ABOVE GROUND AND UNDERGROUND UTILITIES.

ENGINEER'S STATEMENT

PREPARED UNDER MY DIRECT SUPERVISION AND ON BEHALF OF JR ENGINEERING

Mike Bramlett 12/15/21

MIKE A. BRAMLETT, P.E. — DATE
COLORADO P.E. 32314
FOR AND ON BEHALF OF JR ENGINEERING, LLC

COLORADO REGISTERED PROFESSIONAL ENGINEER MIKE A. BRAMLETT 32314

UNTIL SUCH TIME AS THESE DRAWINGS ARE APPROVED BY THE APPROPRIATE REVIEWING AGENCIES, JR ENGINEERING APPROVES THEIR USE ONLY FOR THE PURPOSES DESIGNATED BY WRITTEN AUTHORIZATION.

PREPARED FOR
MONUMENT HILL CM LLC
1864 WOODMOOR DR, STE 100
COLORADO SPRINGS, CO 80920
ATTN: JOE DESJARDIN
(719) 476-0800
JDESJARDIN@PROTERRACO.COM

J·R ENGINEERING
A Westrian Company
Centennial 303-740-9393 • Colorado Springs 719-593-2593
Fort Collins 970-491-9888 • www.jrengineering.com

No.	REVISION	BY	DATE

H-SCALE	1"=10'
V-SCALE	N/A
DATE	12/15/21
DESIGNED BY	GVT
DRAWN BY	GAG
CHECKED BY	

CLOVERLEAF FILING 2
POND PLANS AND DETAILS

SHEET 20 OF 28
JOB NO. 25158.01

X:\2510000.all\2515801\Drawings\Sheet Dwgs\Ch2\2515801P04.dwg, P4 Plan, 12/15/2021 11:14:43 AM, CS

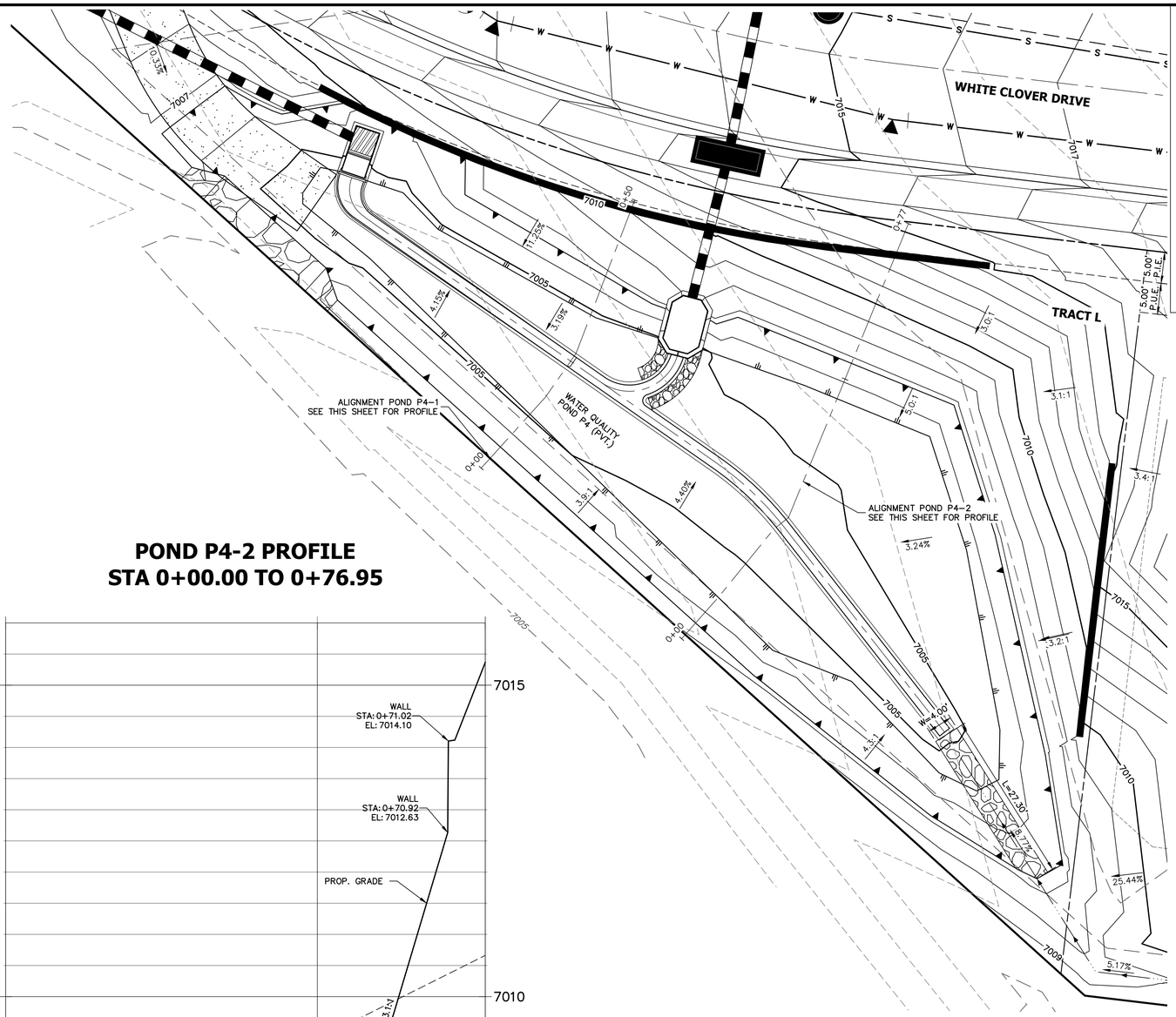

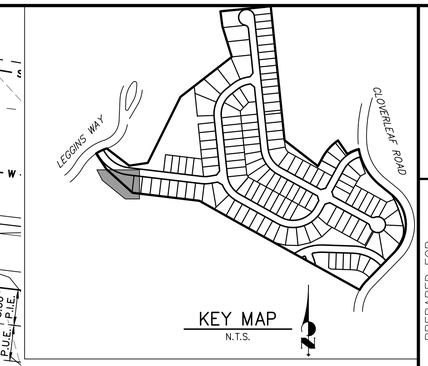

POND P4-1 PROFILE
STA 0+00.00 TO 0+50.27

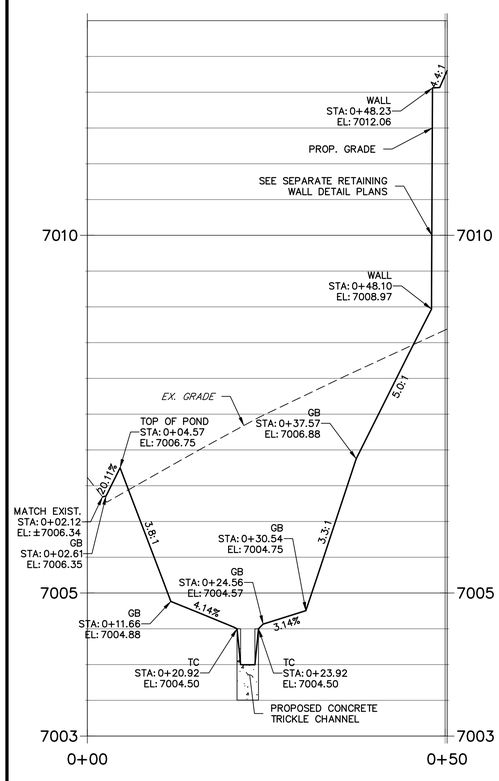

POND P4-2 PROFILE
STA 0+00.00 TO 0+76.95

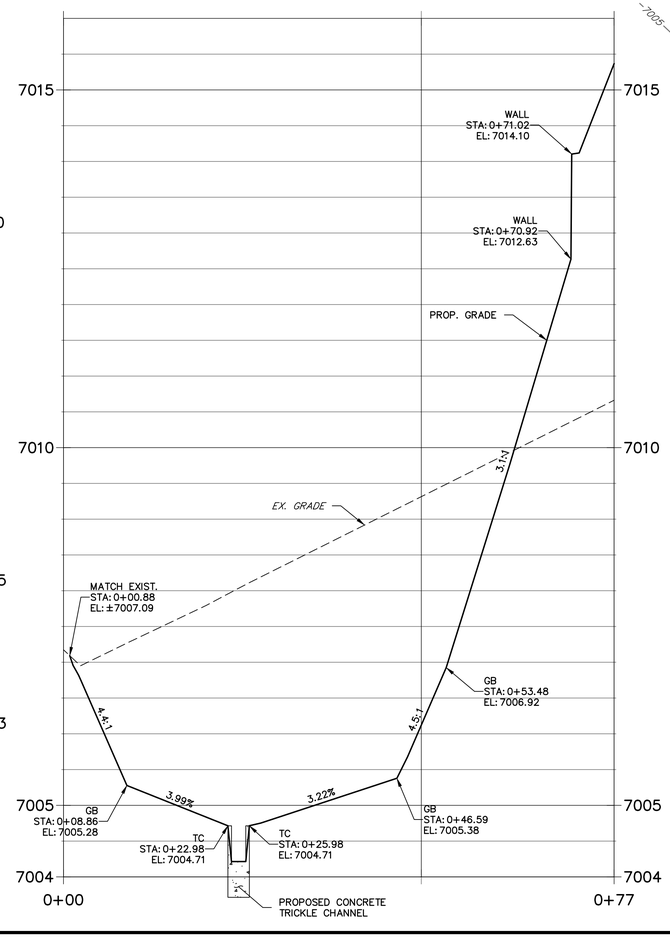

POND 4- PLAN

AS-BUILTS
05/24/2023
SF-21-023

NOTES

1. ALL PROPOSED POND IMPROVEMENTS ARE PRIVATE UNLESS OTHERWISE NOTED.
2. SEE SHEETS 3–8 FOR PROPOSED STORM SEWER DESIGN.
3. CLOVERLEAF METROPOLITAN DISTRICT WILL OWN AND MAINTAIN ALL RETAINING WALLS WITHIN TRACTS. WALLS ON LOTS WILL BE OWNED AND MAINTAINED BY THE INDIVIDUAL LOT OWNER.

EPC PCD 1/31/22

THE LOCATIONS OF EXISTING ABOVE GROUND AND UNDERGROUND UTILITIES ARE SHOWN IN AN APPROXIMATE WAY ONLY. THE CONTRACTOR SHALL DETERMINE THE EXACT LOCATION OF ALL EXISTING UTILITIES BEFORE COMMENCING WORK. THE CONTRACTOR SHALL BE FULLY RESPONSIBLE FOR ANY AND ALL DAMAGES WHICH MIGHT BE CAUSED BY HIS FAILURE TO EXACTLY LOCATE AND PRESERVE ANY AND ALL ABOVE GROUND AND UNDERGROUND UTILITIES.

Know what's **below.**
Call before you dig.

ORIGINAL SCALE: 1" = 10'

ENGINEER'S STATEMENT

PREPARED UNDER MY DIRECT SUPERVISION AND ON BEHALF OF JR ENGINEERING

MIKE A. BRAMLETT, P.E.
COLORADO P.E. 32314
FOR AND ON BEHALF OF JR ENGINEERING, LLC

DATE 12/15/21

UNTIL SUCH TIME AS THESE DRAWINGS ARE APPROVED BY THE APPROPRIATE REVIEWING AGENCIES, JR ENGINEERING APPROVES THEIR USE ONLY FOR THE PURPOSES DESIGNATED BY WRITTEN AUTHORIZATION.

PREPARED FOR
MONUMENT HILL CM LLC
1864 WOODMOOR DR, STE 100
COLORADO SPRINGS, CO 80920
ATTN: JOE DESJARDIN
(719) 476–0800
JDESJARDIN@PROTERRACO.COM

J·R ENGINEERING
A Westrian Company
Centennial 303–740–9393 • Colorado Springs 719–593–2593
Fort Collins 970–491–9888 • www.jrengineering.com

No.	REVISION	BY	DATE

H–SCALE	1"=10'
V–SCALE	1"=1'
DATE	12/15/21
DESIGNED BY	GVT
DRAWN BY	GAG
CHECKED BY	

CLOVERLEAF FILING 2

POND PLANS AND DETAILS

SHEET 21 OF 28

JOB NO. 25158.01

X:\2510000.all\2515801\Drawings\Sheet Dwgs\CD\r\2515801P04.dwg, P4 Profile, 12/15/2021 6:34:29 AM, CS

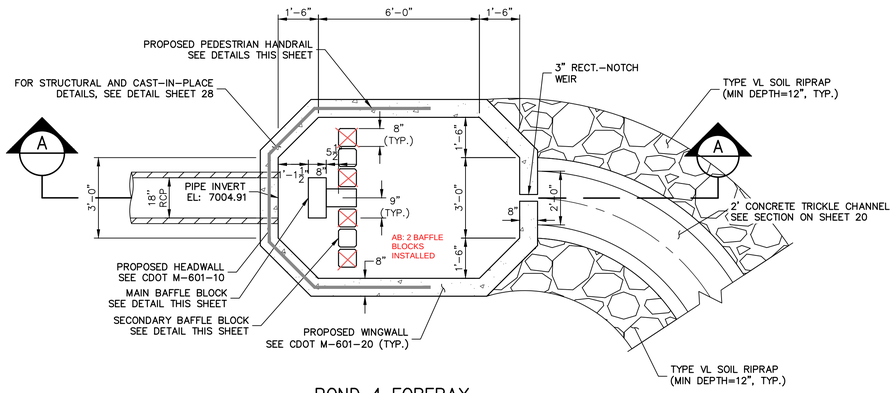

POND 4 FOREBAY PLAN VIEW

SCALE: 3/8"=1'

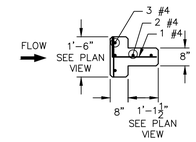

POND 4 FOREBAY MAIN BAFFLE BLOCK PLAN

SCALE: 3/8"=1'

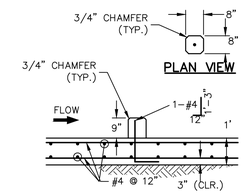

POND 4 FOREBAY SECONDARY BAFFLE BLOCK DETAILS

SCALE: 3/8"=1'

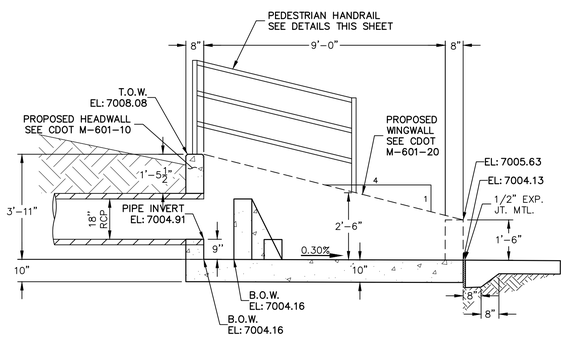

POND 4 FOREBAY CROSS SECTION A-A

SCALE: 3/8"=1'

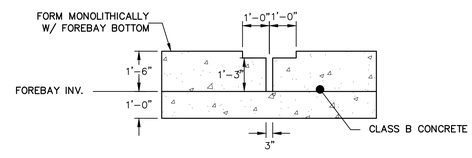

POND 4 FOREBAY SECTION AT WEIR

SCALE: 3/8"=1'

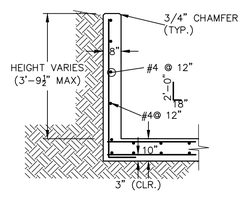

POND 4 FOREBAY WINGWALL REINFORCING DETAIL

SCALE: N.T.S.

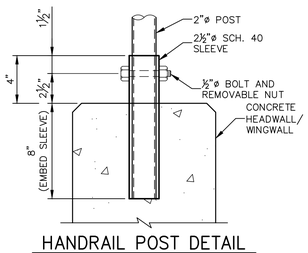

HANDRAIL POST DETAIL

SCALE: 1"=6'

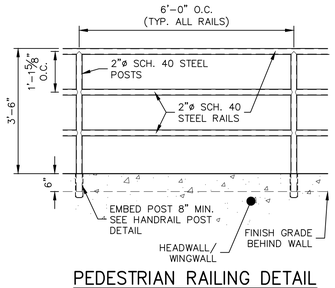

PEDESTRIAN RAILING DETAIL

SCALE: 1/2"=1'

AS-BUILTS
05/24/2023
SF-21-023

EPC PCD 1/31/22

Know what's below. Call before you dig.

ENGINEER'S STATEMENT

PREPARED UNDER MY DIRECT SUPERVISION AND ON BEHALF OF JR ENGINEERING

MIKE A. BRAMLETT, P.E.
COLORADO P.E. 32314
FOR AND ON BEHALF OF JR ENGINEERING, LLC

DATE 12/15/21

UNTIL SUCH TIME AS THESE DRAWINGS ARE APPROVED BY THE APPROPRIATE REVIEWING AGENCIES, JR ENGINEERING APPROVES THEIR USE ONLY FOR THE PURPOSES DESIGNATED BY WRITTEN AUTHORIZATION.

PREPARED FOR
MONUMENT HILL CM LLC
1864 WOODMOOR DR, STE 100
COLORADO SPRINGS, CO 80920
ATTN: JOE DESJARDIN
(719) 476-0800
JDESJARDIN@PROTERRACO.COM

J·R ENGINEERING
A Westrian Company
Centennial 303-740-9393 • Colorado Springs 719-593-2593
Fort Collins 970-491-9888 • www.jrengineering.com

No.	REVISION	BY	DATE

H-SCALE	VARIES
V-SCALE	VARIES
DATE	12/15/21
DESIGNED BY	GAG
DRAWN BY	GAG
CHECKED BY	

CLOVERLEAF FILING 2

POND PLANS AND DETAILS

SHEET 22 OF 28

JOB NO. 25158.01

X:\2510000 all\25158\01\Drawings\Sheet Dwgs\CDs\25158\01P04-DT.dwg, P4-Forebay, 12/15/2021 6:35:11 AM, CS

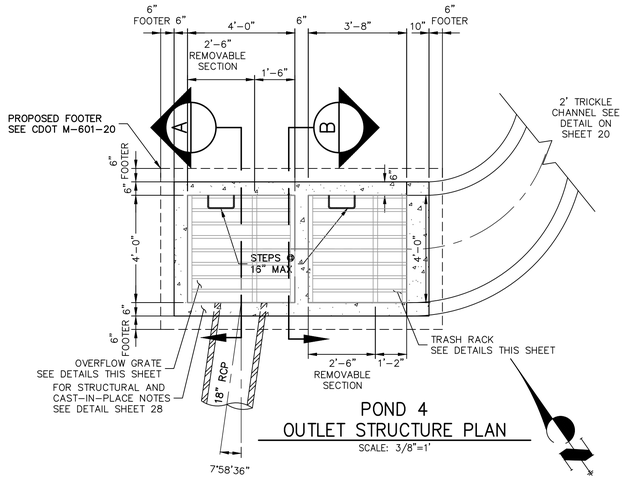

POND 4
OUTLET STRUCTURE PLAN
SCALE: 3/8"=1'

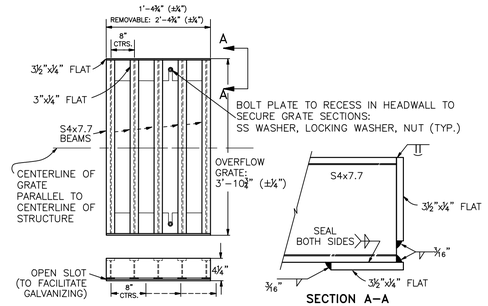

OVERFLOW GRATE DETAILS
N.T.S.

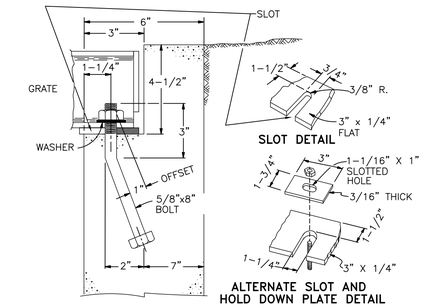

OVERFLOW GRATE/ TRASH RACK INSTALLATION DETAIL
N.T.S.

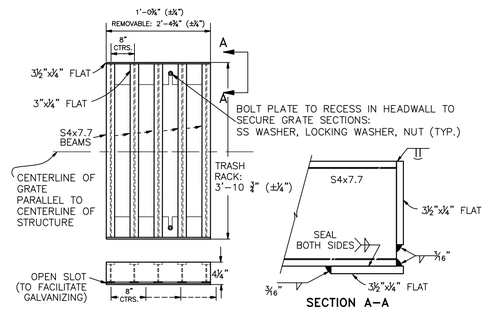

TRASH RACK DETAILS
N.T.S.

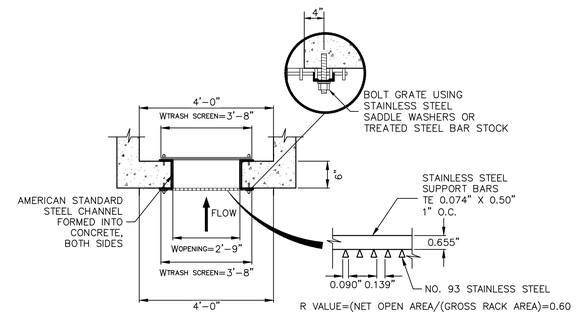

TRASH SCREEN AND PLATE DETAIL (PLAN)
N.T.S.

TRASH SCREEN DETAIL
N.T.S.

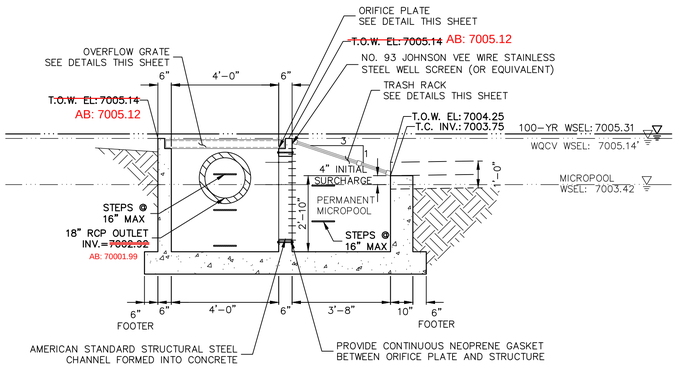

POND 4
OUTLET STRUCTURE PROFILE
SCALE: 3/8"=1'

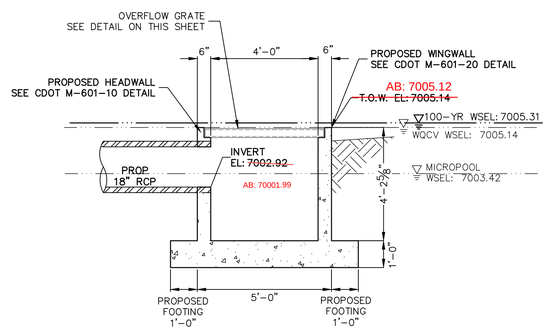

A A-A SECTION
SCALE: 3/8"=1'

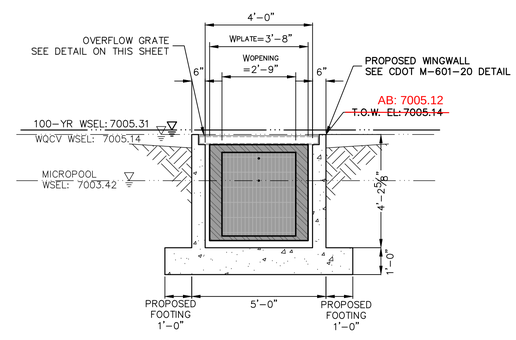

B B-B SECTION
SCALE: 3/8"=1'

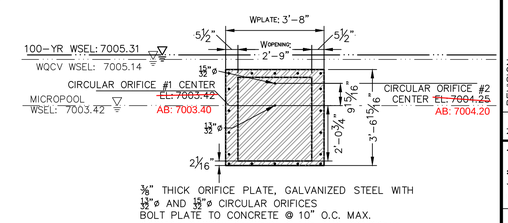

3/16" THICK ORIFICE PLATE, GALVANIZED STEEL WITH 11/16"ø AND 15/32"ø CIRCULAR ORIFICES
BOLT PLATE TO CONCRETE @ 10" O.C. MAX.
PROVIDE GASKET BETWEEN PLATE AND CONCRETE

ORIFICE PLATE DETAIL
SCALE: 3/8"=1'

POND 4 OUTLET STRUCTURE NOTES:

ORIFICE PLATE:

1. PROVIDE CONTINUOUS NEOPRENE GASKET MATERIAL BETWEEN THE ORIFICE PLATE AND CONCRETE AND BETWEEN THE RESTRICTOR PLATE AND CONCRETE.
2. BOLT PLATE TO CONCRETE 12" MAX. ON CENTER.

TRASH RACKS:

3. TRASH RACKS SHALL BE 1¼" SCH.40 STEEL PIPE, GALVANIZED, @ 6" CENTERS. SUPPORT BARS SHALL BE ½"x2" STEEL RECTANGULAR BARS, GALVANIZED, @ 36". ALL TRASH RACKS SHALL BE MOUNTED USING STAINLESS STEEL HARDWARE.
4. REMOVABLE TRASH RACK SECTIONS SHALL BE MOUNTED USING STAINLESS STEEL HARDWARE AND PROVIDED WITH HINGED & LOCKABLE OR BOLTABLE ACCESS PANELS AS SHOWN ON THE PLANS.
5. STEEL TRASH RACKS SHALL BE HOT DIP GALVANIZED AND MAY BE HOT POWDER COATED AFTER GALVANIZING.
6. STRUCTURAL STEEL FOR GRATES, ORIFICE PLATES, AND BARS SHALL BE GALVANIZED AND SHALL BE IN ACCORDANCE WITH CDOT STANDARD SPECIFICATIONS, SUBSECTION 712.06.
7. ALL HARDWARE, BOLTS, AND FASTENERS SHALL BE STAINLESS STEEL.
8. CONTRACTOR SHALL SUBMIT SHOP DRAWINGS FOR ALL PLATES AND GRATING FOR ENGINEER'S APPROVAL PRIOR TO CONSTRUCTION.

AS-BUILTS
05/24/2023
SF-21-023

EPC PCD 1/31/22

Know what's below. Call before you dig.

ENGINEER'S STATEMENT

PREPARED UNDER MY DIRECT SUPERVISION AND ON BEHALF OF JR ENGINEERING

12/15/21

MIKE A. BRAMLETT, P.E.
COLORADO P.E. 32314
FOR AND ON BEHALF OF JR ENGINEERING, LLC

DATE

UNTIL SUCH TIME AS THESE DRAWINGS ARE APPROVED BY THE APPROPRIATE REVIEWING AGENCIES, JR ENGINEERING APPROVES THEIR USE ONLY FOR THE PURPOSES DESIGNATED BY WRITTEN AUTHORIZATION.

PREPARED FOR
MONUMENT HILL CM LLC
1864 WOODMOOR DR, STE 100
COLORADO SPRINGS, CO 80920
ATTN: JOE DESJARDIN
(719) 476-0800
JDESJARDIN@PROTERRACO.COM

J·R ENGINEERING
A Westrian Company
Centennial 303-740-9393 • Colorado Springs 719-593-2593
Fort Collins 970-491-9888 • www.jrengineering.com

No.	REVISION	BY	DATE

H-SCALE	3/8"=1'
V-SCALE	3/8"=1'
DATE	12/15/21
DESIGNED BY	GAG
DRAWN BY	GAG
CHECKED BY	

CLOVERLEAF FILING 2

POND PLANS AND DETAILS

SHEET 23 OF 28

JOB NO. 25158.01

X:\2510000.all\2515801\Drawings\Sheet Dwgs\CD\r25158010P04-DT.dwg, P4-Outlet, 12/15/2021 6:35:24 AM, CS

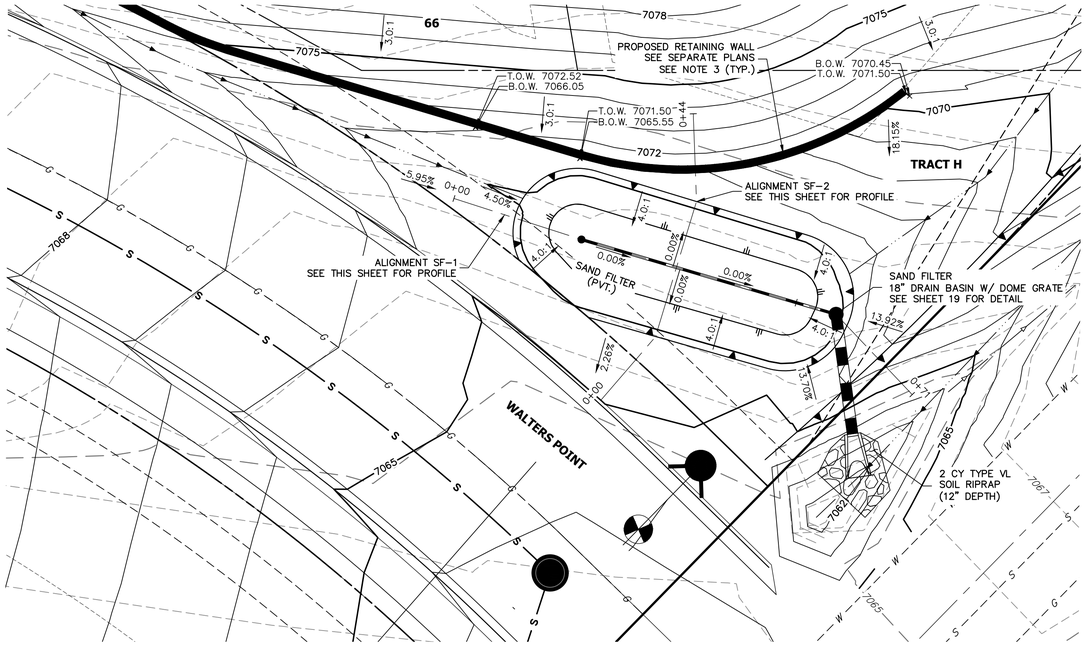

SAND FILTER-PLAN

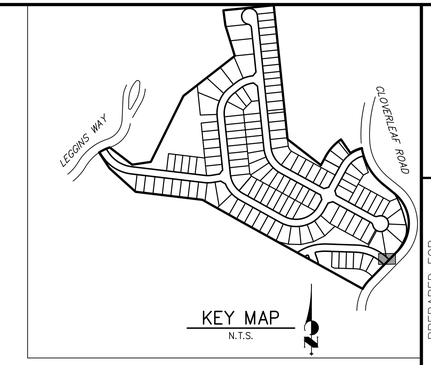

KEY MAP
N.T.S.

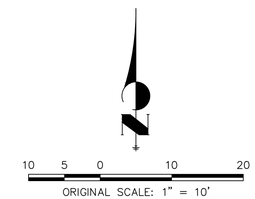

ORIGINAL SCALE: 1" = 10'

POND SF-2 PROFILE
STA 0+00.00 TO 0+43.72

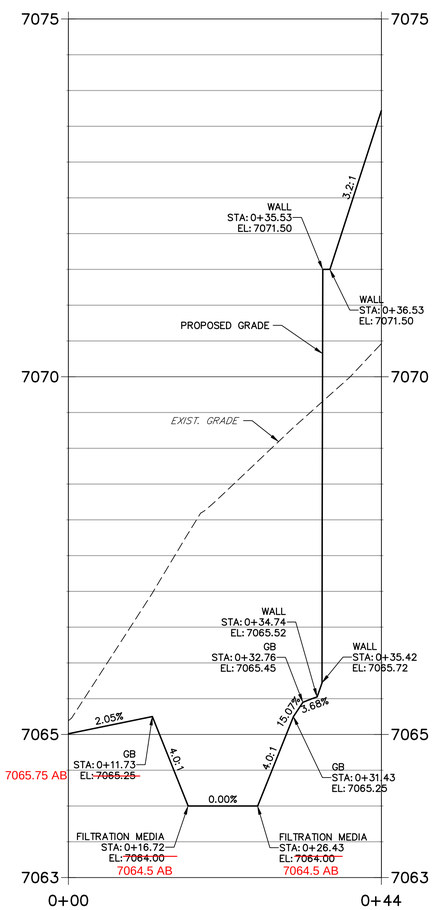

POND SF-1 PROFILE
STA 0+00.00 TO 0+71.26

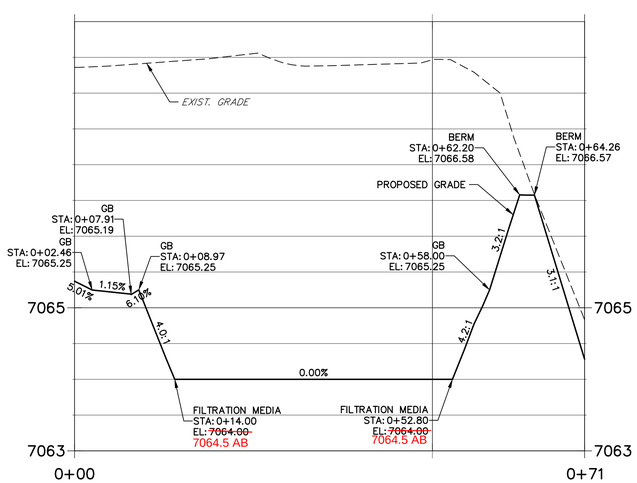

NOTES

1. ALL PROPOSED POND IMPROVEMENTS ARE PRIVATE UNLESS OTHERWISE NOTED.
2. SEE SHEETS 3–8 FOR PROPOSED STORM SEWER DESIGN.
3. CLOVERLEAF METROPOLITAN DISTRICT WILL OWN AND MAINTAIN ALL RETAINING WALLS WITHIN TRACTS. WALLS ON LOTS WILL BE OWNED AND MAINTAINED BY THE INDIVIDUAL LOT OWNER.

811 Know what's **below.** **Call** before you dig.

THE LOCATIONS OF EXISTING ABOVE GROUND AND UNDERGROUND UTILITIES ARE SHOWN IN AN APPROXIMATE WAY ONLY. THE CONTRACTOR SHALL DETERMINE THE EXACT LOCATION OF ALL EXISTING UTILITIES BEFORE COMMENCING WORK. THE CONTRACTOR SHALL BE FULLY RESPONSIBLE FOR ANY AND ALL DAMAGES WHICH MIGHT BE CAUSED BY HIS FAILURE TO EXACTLY LOCATE AND PRESERVE ANY AND ALL ABOVE GROUND AND UNDERGROUND UTILITIES.

AS-BUILTS
05/24/2023
SF-21-023

EPC PCD 1/31/22

ENGINEER'S STATEMENT

PREPARED UNDER MY DIRECT SUPERVISION AND ON BEHALF OF JR ENGINEERING

12/15/21

MIKE A. BRAMLETT, P.E.
COLORADO P.E. 32314
FOR AND ON BEHALF OF JR ENGINEERING, LLC

DATE

UNTIL SUCH TIME AS THESE DRAWINGS ARE APPROVED BY THE APPROPRIATE REVIEWING AGENCIES, JR ENGINEERING APPROVES THEIR USE ONLY FOR THE PURPOSES DESIGNATED BY WRITTEN AUTHORIZATION.

PREPARED FOR
MONUMENT HILL CM LLC
1864 WOODMOOR DR, STE 100
COLORADO SPRINGS, CO 80920
ATTN: JOE DESJARDIN
(719) 476–0800
JDESJARDIN@PROTERRACO.COM

J·R ENGINEERING
A Westrian Company
Centennial 303–740–9393 • Colorado Springs 719–593–2593
Fort Collins 970–491–9888 • www.jrengineering.com

No.	REVISION	BY	DATE

H–SCALE	1"=10'
V–SCALE	1"=1'
DATE	12/15/21
DESIGNED BY	GAG
DRAWN BY	GAG
CHECKED BY	

CLOVERLEAF FILING 2

POND PLANS AND DETAILS

SHEET 24 OF 28

JOB NO. 25158.01

X:\2515000.all\2515801\Drawings\Sheet Dwgs\CD\s2515801SF01.dwg, SF-Plan & Profile, 12/15/2021 6:36:39 AM, CS

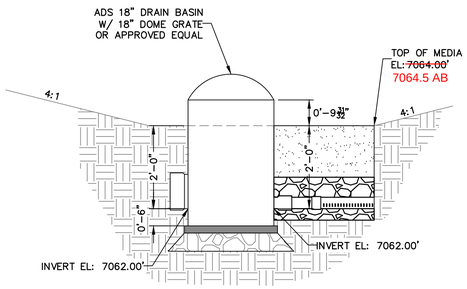

DRAIN BASIN
OUTLET FRONT DETAIL
SCALE: N.T.S.

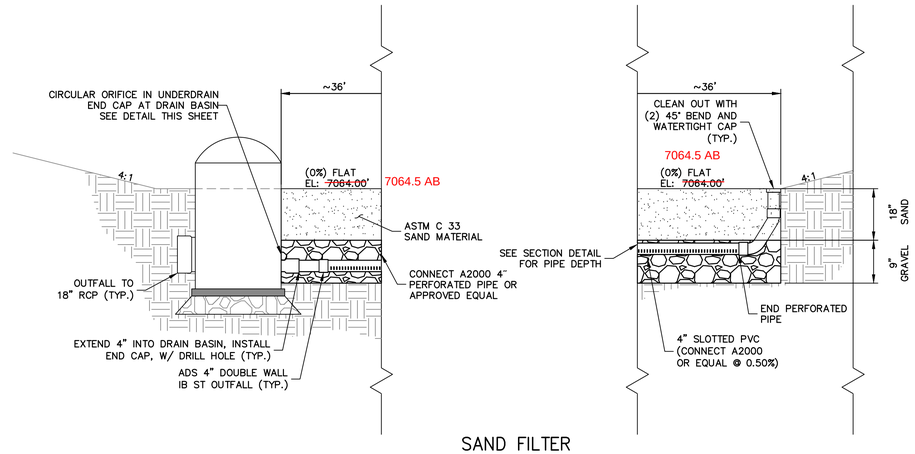

SAND FILTER
LONGITUDINAL CROSS
SECTION DETAILS
SCALE: N.T.S.

NOTE: SEE URBAN DRAINAGE VOLUME 3 FACT SHEETS T-6
FOR FURTHER DETAILS AND SPECIFICATIONS.

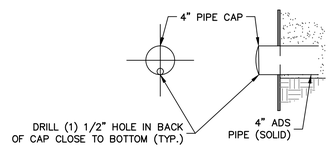

SAND FILTER UNDERDRAIN
END CAP DETAIL
SCALE: N.T.S.

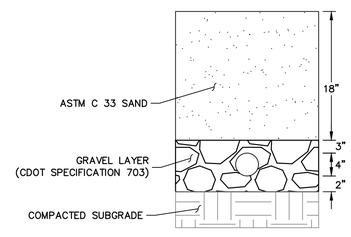

SAND FILTER
SUB-SURFACE
TYP. SECTION
SCALE: N.T.S.

AS-BUILTS
05/24/2023
SF-21-023

EPC PCD 1/31/22

Know what's **below.**
Call before you dig.

ENGINEER'S STATEMENT

PREPARED UNDER MY DIRECT SUPERVISION AND ON BEHALF OF JR ENGINEERING

MIKE A. BRAMLETT, P.E.
COLORADO P.E. 32314
FOR AND ON BEHALF OF JR ENGINEERING, LLC

DATE 12/15/21

UNTIL SUCH TIME AS THESE DRAWINGS ARE APPROVED BY THE APPROPRIATE REVIEWING AGENCIES, JR ENGINEERING APPROVES THEIR USE ONLY FOR THE PURPOSES DESIGNATED BY WRITTEN AUTHORIZATION.

PREPARED FOR
MONUMENT HILL CM LLC
1864 WOODMOOR DR, STE 100
COLORADO SPRINGS, CO 80920
ATTN: JOE DESJARDIN
(719) 476-0800
JDESJARDIN@PROTERRACO.COM

J·R ENGINEERING
A Westrian Company
Centennial 303-740-9393 • Colorado Springs 719-593-2593
Fort Collins 970-491-9888 • www.jrengineering.com

No.	REVISION	BY	DATE

H-SCALE	N.T.S.
V-SCALE	N.T.S.
DATE	12/15/21
DESIGNED BY	GAG
DRAWN BY	GAG
CHECKED BY	

CLOVERLEAF FILING 2

POND PLANS AND DETAILS

SHEET 25 OF 28

JOB NO. 25158.01

X:\2510000 all\25158\01\Drawings\Sheet Dwgs\CD\(25158)SF01.dwg, SF-Detail, 12/15/2021 6:37:01 AM, CS

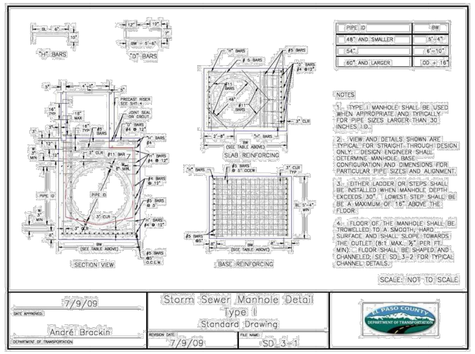

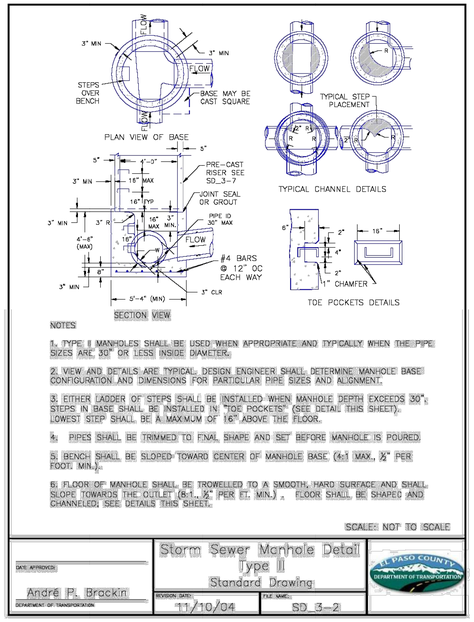

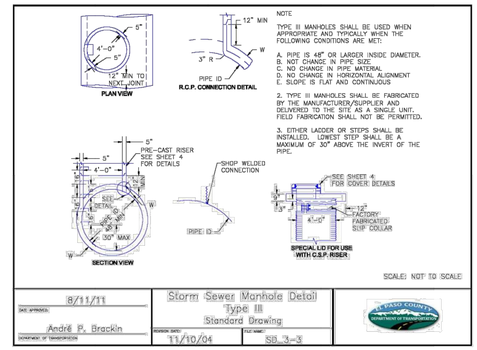

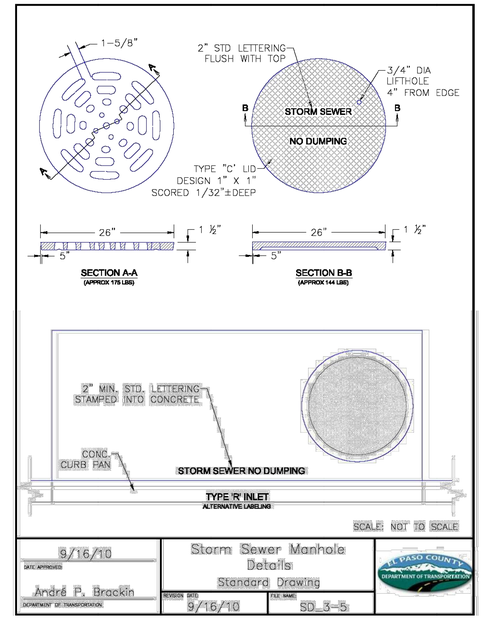

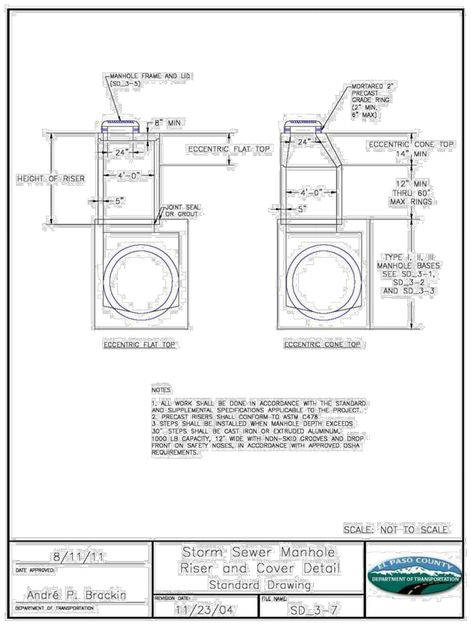

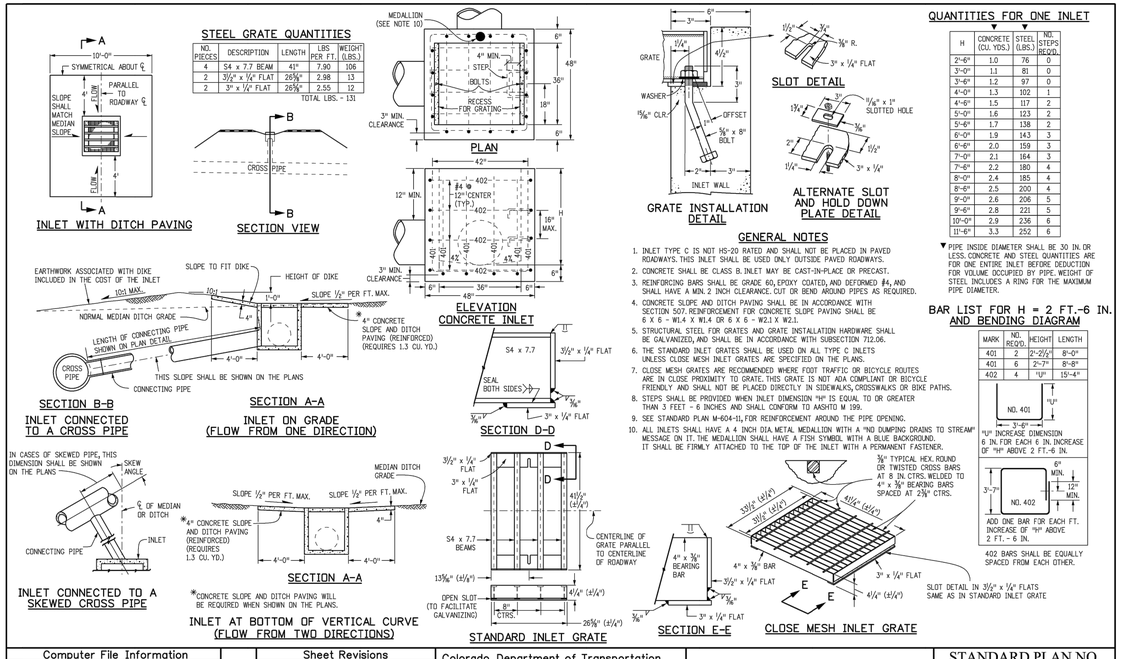

UNTIL SUCH TIME AS THESE DRAWINGS ARE APPROVED BY THE APPROPRIATE REVIEWING AGENCIES, JR ENGINEERING APPROVES THEIR USE ONLY FOR THE PURPOSES DESIGNATED BY WRITTEN AUTHORIZATION.

PREPARED FOR
MONUMENT HILL CM LLC
1864 WOODMOOR DR, STE 100
COLORADO SPRINGS, CO 80920
ATTN: JOE DESJARDIN
(719) 476-0800
JDESJARDIN@PROTERRACO.COM

J·R ENGINEERING
A Westrian Company
Centennial 303-740-9393 • Colorado Springs 719-593-2593
Fort Collins 970-491-9888 • www.jrengineering.com

No.	REVISION	BY	DATE

H-SCALE	1"=50'
V-SCALE	N/A
DATE	12/15/21
DESIGNED BY	SAV
DRAWN BY	SAV
CHECKED BY	

AS-BUILTS
05/24/2023
SF-21-023

EPC PCD 1/31/22

Know what's below. Call before you dig.

ENGINEER'S STATEMENT
STANDARD DETAILS SHOWN WERE REVIEWED ONLY AS TO THEIR APPLICATION ON THIS PROJECT
MIKE A. BRAMLETT, P.E.
COLORADO P.E. 32314
FOR AND ON BEHALF OF JR ENGINEERING, LLC
DATE 12/15/21

CLOVERLEAF FILING 2
DETAIL SHEET

SHEET 26 OF 28
JOB NO. 25158.01

X:\2510000 all\25158\01\Drawings\Sheet Dwgs\CD\25158010T01.dwg, DT01, 12/15/2021 6:37:28 AM, CS

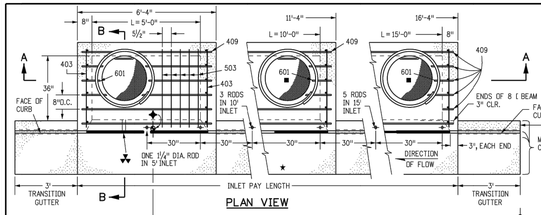

★ FOR LENGTH (L) 10 FT. OR MORE, PROVIDE MAINTENANCE ACCESS AT BOTH ENDS WITH AN ADDITIONAL MANHOLE RING AND COVER. CUT REINFORCEMENT BAR ACCORDINGLY.

✦ STATION POINT AT MIDPOINT OF INLET ALONG FLOWLINE

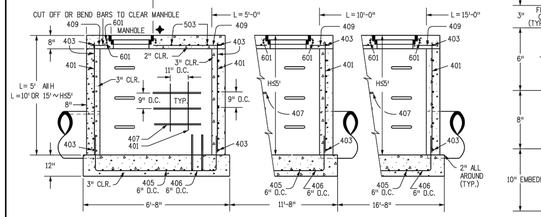

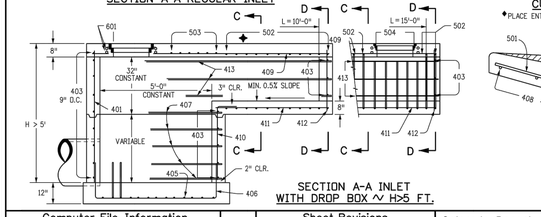

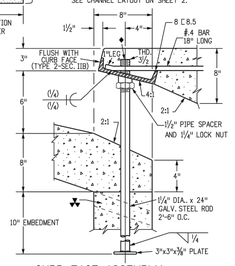

✚ PLACE ENTIRE ASSEMBLY BEFORE POURING CONCRETE.

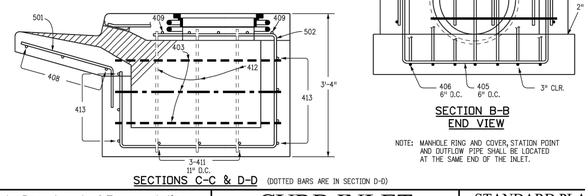

GENERAL NOTES:

SEE SHEET 2.

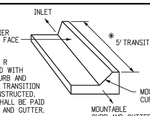

* WHEN A TYPE R INLET IS USED WITH MOUNTABLE CURB AND GUTTER, 5 FT. TRANSITION SHALL BE CONSTRUCTED. TRANSITION SHALL BE PAID FOR AS CURB AND GUTTER.

TRANSITION CURB

▲ - FOR A 1'-0" PAN SLOPE 2" PER FT.

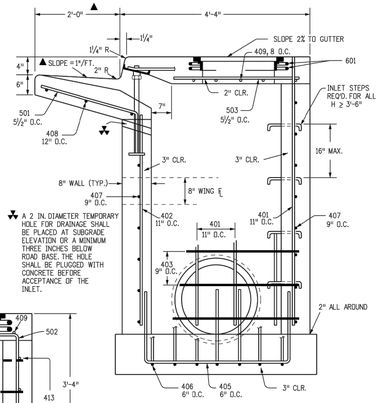

✚ A 2 IN. DIAMETER TEMPORARY HOLE FOR DRAINAGE SHALL BE PLACED AT SUBGRADE ELEVATION OR A MINIMUM THREE INCHES BELOW ROAD BASE. THE HOLE SHALL BE PLUGGED WITH CONCRETE BEFORE ACCEPTANCE OF THE INLET.

NOTE: MANHOLE RING AND COVER, STATION POINT AND OUTFLOW PIPE SHALL BE LOCATED AT THE SAME END OF THE INLET.

Computer File Information		Sheet Revisions	
Creation Date: 07/31/19		Date:	Comments
Designer Initials: JBK	(R-X)		
Last Modification Date: 07/31/19	(R-X)		
Detailer Initials: LTA	(R-X)		
CAD Ver.: MicroStation V8 Scale: Not to Scale Units: English	(R-X)		

Colorado Department of Transportation
2829 West Howard Place
CDOT HQ, 3rd Floor
Denver, CO 80204
Phone: 303-757-9021 FAX: 303-757-9868
Project Development Branch JBK

CURB INLET TYPE R

Issued by the Project Development Branch: July 31, 2019

STANDARD PLAN NO.
M-604-12
Standard Sheet No. 1 of 2
Project Sheet Number:

MARK	BAR # OR SIZE	O.C. SPACING	TYPE	ALL INLETS		INLETS: H ≤ 5 FT.				INLETS: H > 5 FT.			
				L = 5 FT.		L = 10 FT.		L = 15 FT.		L = 10 FT.		L = 15 FT.	
				NO. REQ'D.	LENGTH	NO. REQ'D.	LENGTH	NO. REQ'D.	LENGTH	NO. REQ'D.	LENGTH	NO. REQ'D.	LENGTH
401	4	11"	II	15	*	21	*	26	*	11	*	11	*
402	4	11"	II	7	*	13	*	18	*	7	*	7	*
403	4	9"	II	*	4'-0"	*	4'-0"	*	4'-0"	*	4'-0"	*	4'-0"
405	4	6"	VI	11	6'-10"	21	6'-10"	31	6'-10"	11	6'-10"	11	6'-10"
406	4	6"	VIII	7	8'-10"	7	13'-10"	7	18'-10"	7	8'-10"	7	8'-10"
407	4	9"	II	*	5'-10"	*	10'-10"	*	15'-10"	*	5'-10"	*	5'-10"
408	4	12"	II	3	6'-10"	3	11'-10"	3	16'-0"	3	11'-10"	3	16'-0"
409	4	8"	II	6	5'-10"	6	10'-10"	6	15'-10"	6	10'-10"	6	15'-10"
410	4	11"	VII							3		3	*
411	4	11"	II							3	5'-2"	3	10'-2"
412	4	11"	II							3	2'-9"	3	2'-9"
413	4	9"	II							7	10'-10"	7	15'-10"
501	5	5½"	IV	11	3'-4"	22	3'-4"	33	3'-4"	22	3'-4"	33	3'-4"
502	5	5½"	III							11	11'-5"	17	11'-5"
503	5	5½"	II	5	3'-6"	16	3'-6"	27	3'-6"	6	3'-6"	6	3'-6"
504	5	5½"	IX									5	8'-4"
601	6	2½"	V	2	8'-10"	2	8'-10"	2	8'-10"	2	8'-10"	4	8'-10"
■ 8C8.5				1	5'-10"	1	10'-10"	1	15'-10"	1	10'-10"	1	15'-10"
				2 BARS, 1 RODS	—	4 BARS, 3 RODS	—	6 BARS, 5 RODS	—	4 BARS, 3 RODS	—	6 BARS, 5 RODS	—

* VARIABLE REFER TO TABLE TWO.
■ INCLUDE #4, 18 IN. BARS (SEE CHANNEL LAYOUT).

REGULAR INLETS — DROP BOX INLETS

TABLE ONE ~ BAR LIST FOR CURB INLETS, TYPE "R"

"H"	LENGTH			NO. REQ'D. REGULAR		NO. REQ'D. DROP BOX		L = 5 FT.		L = 10 FT.		L = 15 FT.	
	401	402	410	403	407	403	407	CONC. CU. YDS.	STEEL LBS.	CONC. CU. YDS.	STEEL LBS.	CONC. CU. YDS.	STEEL LBS.
3'-0"	2'-8"	1'-8"		10	7			3.2	285	5.3	497	7.4	706
3'-6"	3'-2"	2'-2"		10	7			3.4	305	5.7	528	7.9	747
4'-0"	3'-8"	2'-8"		12	9			3.7	326	6.0	559	8.4	786
4'-6"	4'-2"	3'-2"		12	9			3.9	334	6.4	571	8.8	803
5'-0"	4'-8"	3'-8"		14	11			4.1	354	6.7	602	9.3	844
5'-6"	5'-2"	4'-2"	3'-5"	16	13	15	6	4.4	375	6.0	607	7.4	850
6'-0"	5'-8"	4'-8"	3'-11"	16	13	16	6	4.6	382	6.2	616	7.6	860
6'-6"	6'-2"	5'-2"	4'-5"	18	15	18	8	4.8	402	6.4	637	7.8	880
7'-0"	6'-8"	5'-8"	4'-11"	20	17	19	10	5.0	423	6.6	654	8.0	897
7'-6"	7'-2"	6'-2"	5'-5"	20	17	20	10	5.3	430	6.9	664	8.3	907
8'-0"	7'-8"	6'-8"	5'-11"	22	19	22	12	5.5	451	7.1	684	8.5	927
8'-6"	8'-2"	7'-2"	6'-5"	24	21	23	14	5.7	471	7.3	702	8.7	944
9'-0"	8'-8"	7'-8"	6'-11"	24	21	24	14	6.0	479	7.6	711	9.0	954
9'-6"	9'-2"	8'-2"	7'-5"	26	23	26	16	6.2	499	7.8	732	9.2	974
10'-0"	9'-8"	8'-8"	7'-11"	28	25	27	18	6.4	520	8.0	749	9.4	992
10'-6"	10'-2"	9'-2"	8'-5"	28	25	28	18	6.7	527	8.3	759	9.7	1001
11'-0"	10'-8"	9'-8"	8'-11"	30	27	30	20	6.9	547	8.5	779	9.9	1022

NOTES: FOR L = 5 FT., L = 10 FT., AND L = 15 FT.
REGULAR INLETS: TOTAL QUANTITIES NEEDED ARE OUTSIDE THE HEAVY BLACK LINE.
DROP BOX INLETS: TOTAL QUANTITIES NEEDED ARE INSIDE THE HEAVY BLACK LINE.
STEEL WEIGHTS DO NOT INCLUDE STRUCTURAL STEEL CHANNEL.

TABLE TWO ~ BARS AND QUANTITIES VARIABLE WITH "H"

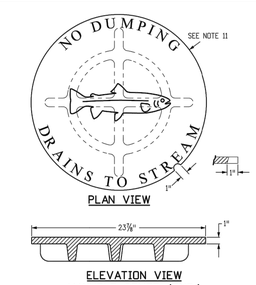

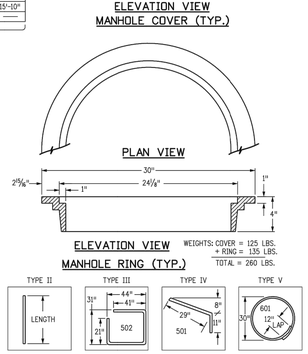

GENERAL NOTES

1. CONCRETE SHALL BE CLASS B. INLET MAY BE CAST-IN-PLACE OR PRECAST.
2. CONCRETE WALLS SHALL BE FORMED ON BOTH SIDES AND SHALL BE 8 INCHES THICK.
3. INLET STEPS SHALL BE IN CONFORMANCE WITH AASHTO M 199.
4. CURB FACE ASSEMBLY SHALL BE GALVANIZED AFTER WELDING.
5. EXPOSED CONCRETE CORNERS SHALL BE CHAMFERED ¾" OF A INCH. CURB AND GUTTER CORNERS SHALL BE FINISHED TO MATCH THE EXISTING CURB AND GUTTER BEYOND THE TRANSITION GUTTER.
6. REINFORCING BARS SHALL BE DEFORMED AND SHALL HAVE A 2 INCH MINIMUM CLEARANCE. ALL REINFORCING BARS SHALL BE GRADE 60 AND EPOXY COATED.
7. DIMENSIONS AND WEIGHTS OF TYPICAL MANHOLE RING AND COVER ARE NOMINAL.
8. MATERIAL FOR MANHOLE RINGS AND COVERS SHALL BE GRAY OR DUCTILE CAST IRON IN ACCORDANCE WITH SUBSECTION 712.06.
9. SINCE PIPE ENTRIES INTO THE INLET ARE VARIABLE, THE DIMENSIONS SHOWN ARE TYPICAL. ACTUAL DIMENSIONS AND QUANTITIES FOR CONCRETE AND REINFORCEMENT SHALL BE AS REQUIRED IN THE WORK. QUANTITIES INCLUDE VOLUMES OCCUPIED BY PIPES.
10. STRUCTURAL STEEL SHALL BE GALVANIZED AND SHALL BE IN ACCORDANCE WITH SUBSECTION 712.06.
11. ALL MANHOLE COVERS SHALL BE CAST WITH A "NO DUMPING DRAINS TO STREAM" MESSAGE AND A FISH SYMBOL. THE SURFACE OF THE MANHOLE COVER SHALL HAVE A NON-SLIP PATTERN.

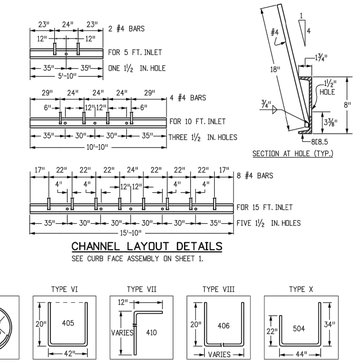

CHANNEL LAYOUT DETAILS

SEE CURB FACE ASSEMBLY ON SHEET 1.

BAR BENDING DIAGRAMS ~ (DIMENSIONS ARE OUT-TO-OUT OF BAR)

Computer File Information		Sheet Revisions	
Creation Date: 07/31/19		Date:	Comments
Designer Initials: JBK	(R-X)		
Last Modification Date: 07/31/19	(R-X)		
Detailer Initials: LTA	(R-X)		
CAD Ver.: MicroStation V8 Scale: Not to Scale Units: English	(R-X)		

Colorado Department of Transportation
2829 West Howard Place
CDOT HQ, 3rd Floor
Denver, CO 80204
Phone: 303-757-9021 FAX: 303-757-9868
Project Development Branch JBK

CURB INLET TYPE R

Issued by the Project Development Branch: July 31, 2019

STANDARD PLAN NO.
M-604-12
Standard Sheet No. 2 of 2
Project Sheet Number:

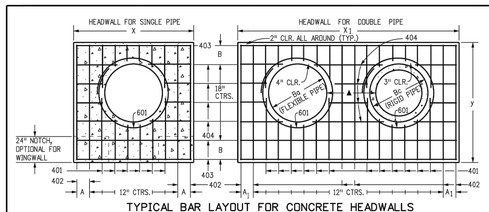

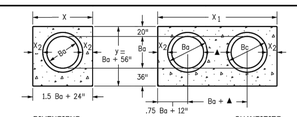

DIMENSIONS									QUANTITIES			
									CONCRETE		STEEL ■	
Ba IN.	Bc IN.	X FT.-IN.	A IN.	X_1 FT.-IN.	A_1 IN.	y FT.-IN.	B IN.	X_2 IN.	SGL. CU. YD.	DBL. CU. YD.	SGL. LBS.	DBL. LBS.
54	65	8-9	8½	15-6	7	9-2	17	20	2.12	3.55	209	364
60	72	9-6	7	17-0	10	9-8	11	21	2.35	3.99	236	414
66	79	10-3	11½	18-6	7	10-2	14	22	2.60	4.44	249	453
72	86	11-0	10	20-0	10	10-8	17	23	2.85	4.91	270	476
78	93	11-9	8½	21-3	11	11-2	11	24	3.11	5.29	306	527
84	100	12-6	7	22-6	7	11-8	14	25	3.38	5.68	333	572
90	107	13-3	11½	23-9	8½	12-2	17	26	3.66	6.08	335	593
96	114	14-0	10	25-0	10	12-8	11	27	3.94	6.48	379	649
102	121	14-9	8½	26-3	11½	13-2	14	28	4.24	6.89	400	664
108	128	15-6	7	27-6	7	13-8	17	29	4.54	7.30	424	707

HEADWALL FOR RIGID ROUND PIPE

GENERAL NOTES

1. CONCRETE SHALL BE CLASS B.
2. HEADWALL SHALL BE PERPENDICULAR TO THE PIPE ℄ UNLESS OTHERWISE SHOWN ON THE PLANS. TABULATED DIMENSIONS AND QUANTITIES MUST BE ADJUSTED FOR SKEWED INSTALLATIONS.
3. FOR WINGWALL DETAILS, SEE STANDARD PLAN M-601-20.
4. VOLUME OCCUPIED BY PIPE HAS BEEN DEDUCTED FROM STEEL AND CONCRETE QUANTITIES.
5. EXPOSED CONCRETE CORNERS SHALL BE CHAMFERED ¾ IN.
6. ALL REINFORCING BARS SHALL HAVE A 2 IN. MINIMUM CLEARANCE.

▲ WHEN TWO OR MORE PIPES ARE LAID SIDE BY SIDE, THEY SHALL BE PLACED SO THAT THE ADJACENT PIPES WILL BE ½ INSIDE DIAMETER APART, OR ½ INSIDE SPAN APART, OR 3 FT. APART (INCLUDING WALL THICKNESS), WHICHEVER IS LESS.

■ ADD 0.89 x (X OR X_1) (LB.) WHEN APRON IS REQUIRED.

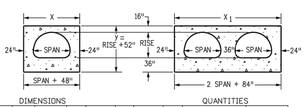

DIMENSIONS								QUANTITIES			
								CONCRETE		STEEL ■	
EQUIV. Ba IN.	SPAN IN.	RISE IN.	X FT.-IN.	A IN.	X_1 FT.-IN.	A_1 IN.	y FT.-IN.	B IN.	SGL. CU. YD.	DBL. CU. YD.	SGL. LBS.	DBL. LBS.
72	81	59	10-9	8½	20-6	7	9-3	17½	2.72	5.10	250	467
78	87	63	11-3	11½	21-6	7	9-7	10½	2.85	5.34	275	531
84	95	67	11-9	8½	22-10	9	9-11	12½	3.08	5.79	290	547
90	103	71	12-7	7½	24-2	11	10-3	15	3.30	6.21	321	591
96	112	75	13-4	12	25-8	8	10-7	16½	3.52	6.65	314	606
102	117	79	13-9	8½	26-6	7	10-11	9½	3.63	6.86	356	672
108	128	83	14-8	8	28-4	12	11-3	11½	3.96	7.51	376	699

HEADWALL FOR FLEXIBLE PIPE ARCH

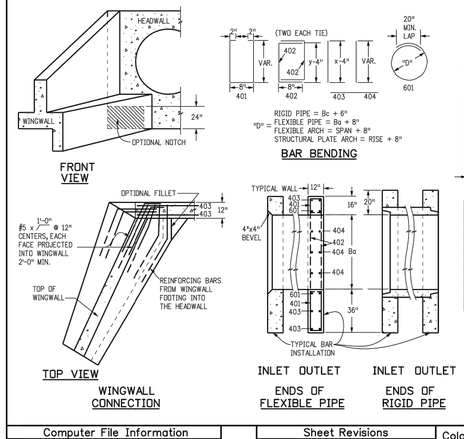

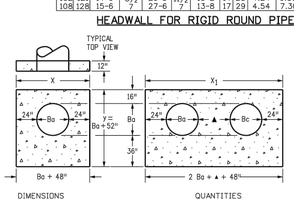

DIMENSIONS								QUANTITIES			
								CONCRETE		STEEL ■	
Ba IN.	X FT.-IN.	A IN.	X_1 FT.-IN.	A_1 IN.	y FT.-IN.	B IN.		SGL. CU. YD.	DBL. CU. YD.	SGL. LBS.	DBL. LBS.
54	8-6	7	15-3	11½	8-10	15	2.19	3.81	211	358
60	9-0	10	16-6	7	9-4	18	2.38	4.25	217	396
66	9-6	7	17-9	8½	9-10	12	2.58	4.70	252	454
72	10-0	10	19-0	10	10-4	15	2.78	5.17	255	472
78	10-6	7	20-0	10	10-10	18	2.98	5.56	275	499
84	11-0	10	21-0	10	11-4	12	3.19	5.95	297	553
90	11-6	7	22-0	10	11-10	15	3.40	6.36	317	517
96	12-0	10	23-0	10	12-4	18	3.62	6.79	321	597
102	12-6	7	24-0	10	12-10	12	3.84	7.21	364	663
108	13-0	10	25-0	10	13-4	15	4.06	7.63	362	678

HEADWALL FOR FLEXIBLE ROUND PIPE

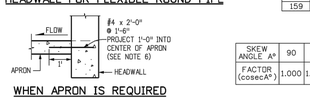

WHEN APRON IS REQUIRED

DIMENSIONS									QUANTITIES			
									CONCRETE		STEEL ■	
EQUIV. Ba IN.	SPAN FT.-IN.	RISE FT.-IN.	X FT.-IN.	A IN.	X_1 FT.-IN.	A_1 IN.	y FT.-IN.	B IN.	SGL. CU. YD.	DBL. CU. YD.	SGL. LBS.	DBL. LBS.
66	6-1	4-7	10-1	10½	19-2	11	8-11	15½	2.52	4.70	232	424
75	7-0	5-1	11-0	10	21-0	10	9-5	9½	2.80	5.25	282	509
84	7-11	5-7	11-11	9½	22-10	9	9-11	12½	3.08	5.79	291	540
93	8-10	6-1	12-10	9	24-8	8	10-5	15½	3.36	6.33	309	622
102	9-9	6-7	13-9	8½	26-6	7	10-11	9½	3.63	6.86	379	673
111	10-11	7-1	14-11	9½	28-10	9	11-5	12½	4.05	7.67	377	711
120	11-10	7-7	15-10	9	30-8	8	11-11	15½	4.36	8.28	395	731
132	12-10	8-4	16-10	12	32-8	8	12-8	11	4.75	9.03	441	839
141	14-1	8-9	18-1	10½	35-2	11	13-1	13½	5.17	9.86	448	931
150	15-4	9-3	19-4	12	37-8	8	13-7	16½	5.69	10.88	490	953
159	15-10	9-10	19-10	9	38-8	8	14-2	11	5.89	11.25	534	1019

HEADWALL FOR STRUCTURAL PLATE ARCH

SKEW ANGLE A°	90	85	80	75	70	65	60	55	50	45	40	35	30
FACTOR (cosecA°)	1.000	1.004	1.015	1.035	1.064	1.103	1.155	1.221	1.305	1.414	1.556	1.743	2.000

SKEW FACTOR TABLE

Computer File Information		Sheet Revisions	
Creation Date: 07/31/19		Date:	Comments
Designer Initials: JBK	(R-X)		
Last Modification Date: 07/31/19	(R-X)		
Detailer Initials: LTA	(R-X)		
CAD Ver.: MicroStation V8 Scale: Not to Scale Units: English	(R-X)		

Colorado Department of Transportation
2829 West Howard Place
CDOT HQ, 3rd Floor
Denver, CO 80204
Phone: 303-757-9021 FAX: 303-757-9868
Project Development Branch JBK

HEADWALL FOR PIPES

Issued by the Project Development Branch: July 31, 2019

STANDARD PLAN NO.
M-601-10
Standard Sheet No. 1 of 1
Project Sheet Number:

Crushed Limestone Trail Surfacing:

a. This item consists of supplying, placing and compacting crushed limestone surfacing on the existing base material and/or newly placed base course trail platform as described in project specifications, or as directed by the Engineer. This material is sometimes labeled as "crushed limestone", "Colorado white fines", or "breeze".
b. Crushed limestone surfacing shall consist of 3/8" minus crushed limestone to a compacted depth of 4" and meeting the following grading requirements:

• Sieve Size	% Passing
• Particle Size	% Passing
• 3/8"	100%
• #4	70 - 100%
• #8	45 - 70%
• #16	30 - 55%
• #30	20 - 45%
• #200	7 - 15%

c. The rock must be crushed into irregular and angular particles to allow interlocking into a tight matrix. The crushed rock must have adequate fines and some natural binders in order to cement the particles together after the fines are moistened, compacted, and allowed to dry. The fines, when laid to a depth of 4 inches, should bind to each other in a consolidated slab which is porous yet resistant to water falling on the surface. If the gradation of crusher fines does not meet the 7% passing the #200, clay fines may be added and mixed with the aggregate.
d. Crushed limestone surfacing shall be "dense grade" limestone. The material shall be uniform in quality and substantially free from extraneous material.
e. Limestone shall be placed with a method that provides a finished surface of evenly mixed material free from large pockets of separated rock.
f. Crushed limestone material shall be within +/- 2% of the optimum moisture content at time of compaction.
g. Crushed limestone shall be compacted by mechanical methods to 95% of Standard Proctor maximum dry density (per ASTM D698 or AASHTO T-99).

AS-BUILTS
05/24/2023
SF-21-023

EPC PCD 1/31/22

Know what's **below.** **Call** before you dig.

ENGINEER'S STATEMENT

STANDARD DETAILS SHOWN WERE REVIEWED ONLY AS TO THEIR APPLICATION ON THIS PROJECT

MIKE A. BRAMLETT, P.E.
COLORADO P.E. 32314
FOR AND ON BEHALF OF JR ENGINEERING, LLC

DATE 12/15/21

UNTIL SUCH TIME AS THESE PLANS ARE APPROVED BY THE APPROPRIATE REVIEWING AGENCIES, JR ENGINEERING APPROVES THEIR USE ONLY FOR THE PURPOSES DESIGNATED BY WRITTEN AUTHORIZATION.

PREPARED FOR
MONUMENT HILL CM LLC
1864 WOODMOOR DR, STE 100
COLORADO SPRINGS, CO 80920
ATTN: JOE DESJARDIN
(719) 476-0800
JDESJARDIN@PROTERRACO.COM

J·R ENGINEERING
A Westrian Company
Centennial 303-740-9393 • Colorado Springs 719-593-2593
Fort Collins 970-491-9888 • www.jrengineering.com

No.	REVISION	BY	DATE

H-SCALE	N/A
V-SCALE	N/A
DATE	12/15/21
DESIGNED BY	SAV
DRAWN BY	SAV
CHECKED BY	

CLOVERLEAF FILING 2
DETAIL SHEET

SHEET 27 OF 28
JOB NO. 25158.01

X:\25158001\#25158001\Drawings\Sheet Dwgs\CD\25158001T01.dwg, DT02, 12/15/2021 6:37:34 AM, CS

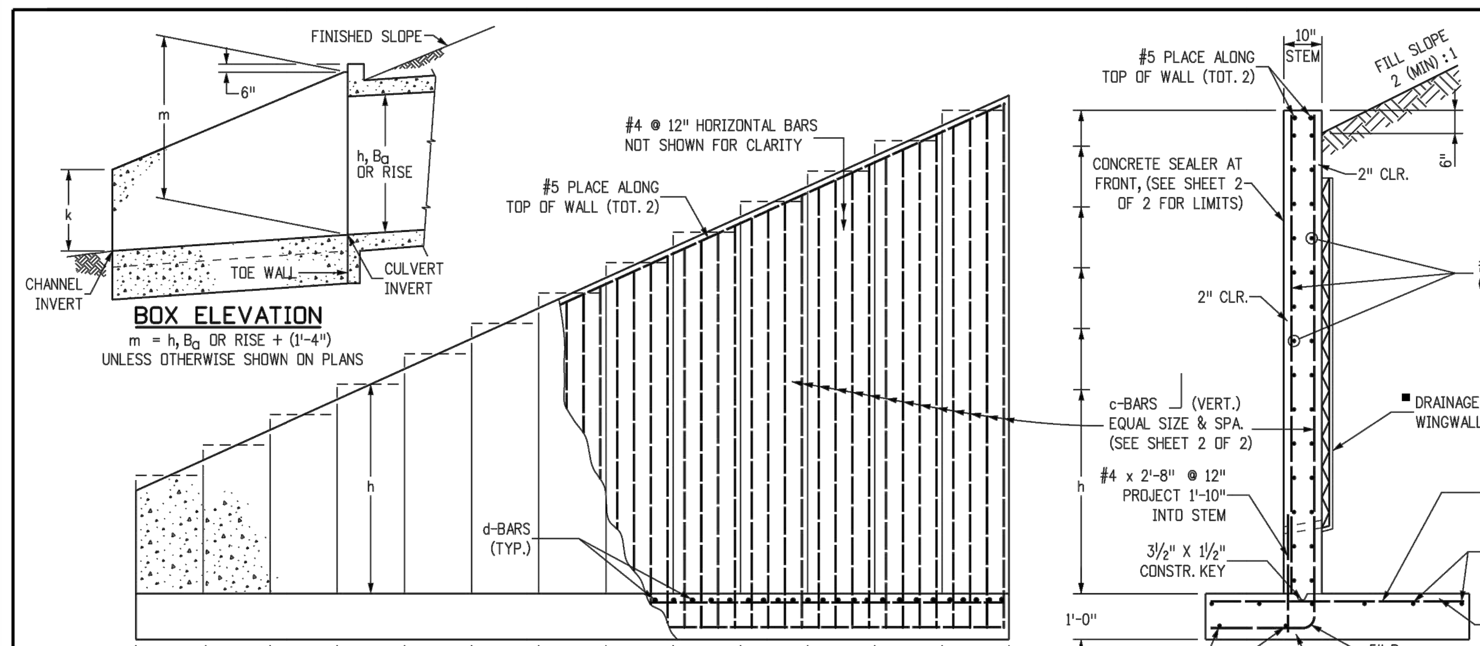

h =	2'	3'	4'	5'	6'	7'	8'	9'	10'	11'	■ 12'	■ 13'	■ 14'
a =	1'-0"	1'-2"	1'-4"	1'-6"	1'-8"	1'-10"	2'-0"	2'-2"	2'-4"	2'-6"	2'-8"	2'-10"	3'-0"
b =	1'-8"	2'-0"	2'-4"	2'-8"	3'-0"	3'-4"	3'-8"	4'-0"	4'-4"	4'-8"	5'-0"	5'-4"	5'-8"
w =	2'-8"	3'-2"	3'-8"	4'-2"	4'-8"	5'-2"	5'-8"	6'-2"	6'-8"	7'-2"	7'-8"	8'-2"	8'-8"
d-BARS	#4 @ 9"	#4 @ 9"	#4 @ 9"	#4 @ 9"	#4 @ 9"	#4 @ 9"	#5 @ 11"	#5 @ 10"	#5 @ 10"	#5 @ 8"	#6 @ 8"	#7 @ 9"	#7 @ 7"
✱ CONC. CY/LF	0.161	0.210	0.259	0.309	0.358	0.407	0.457	0.506	0.556	0.605	0.654	0.704	0.753

✱ DOES NOT INCLUDE TOE WALL QUANTITIES
SEE SHEET 2 OF 2 FOR REINFORCING STEEL QUANTITY

■ REQUIRED DRAINAGE BEHIND WINGWALLS
SEE NOTE 6

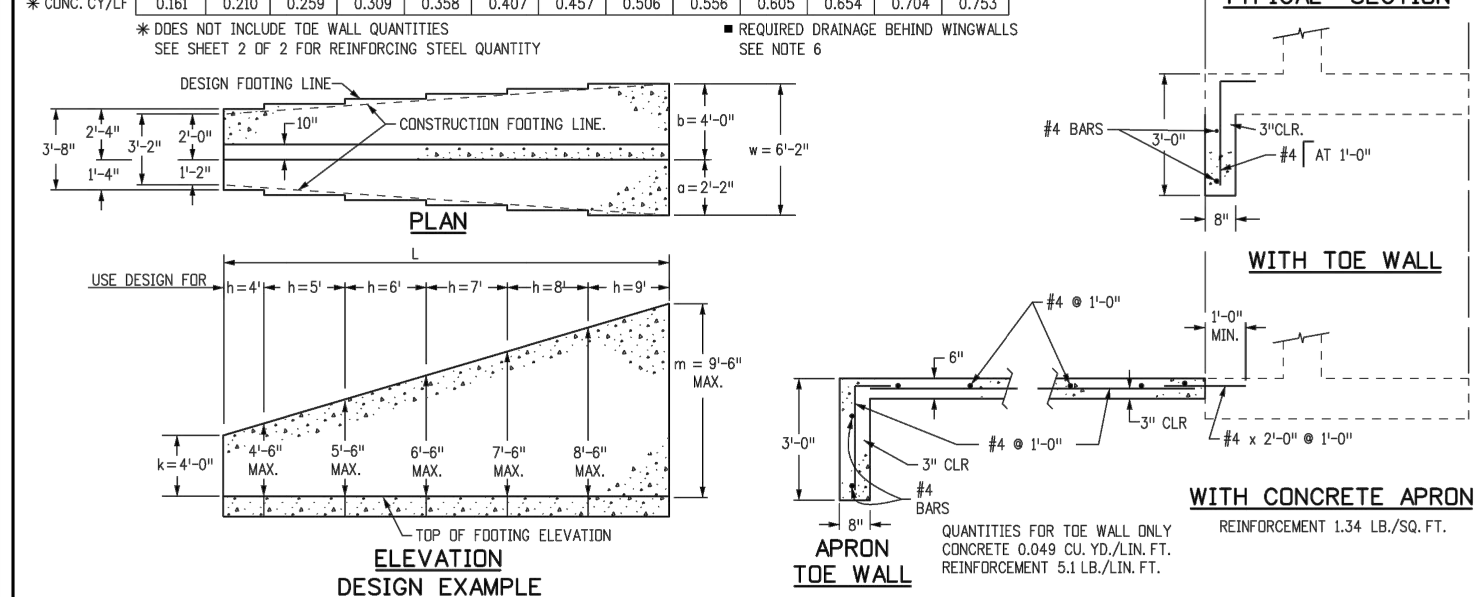

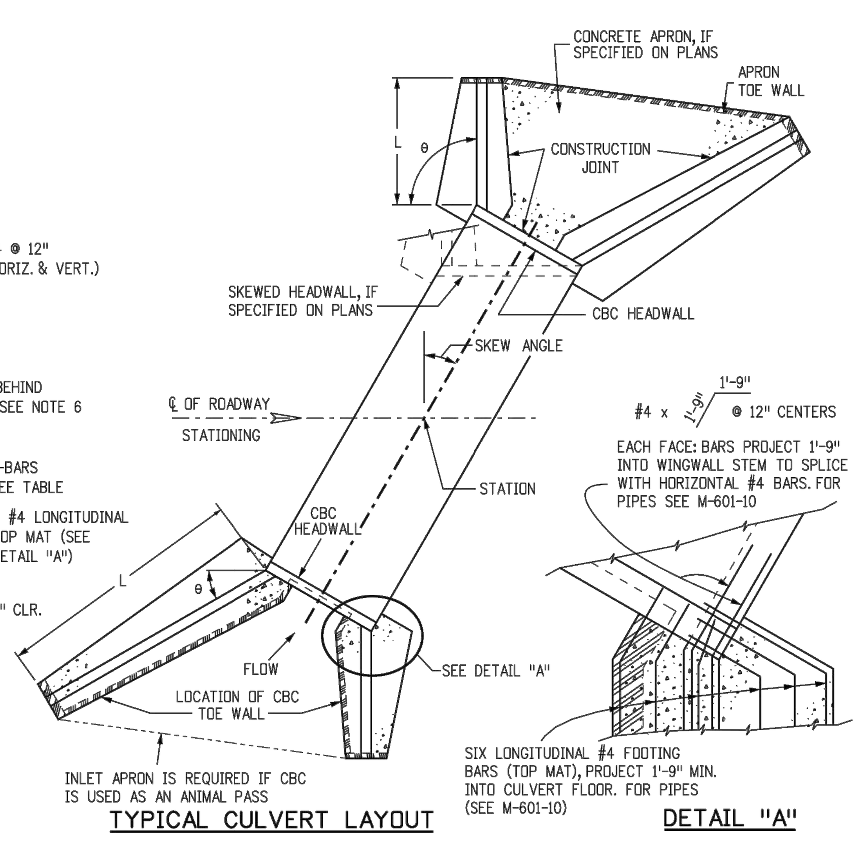

DESIGN DATA:

AASHTO LRFD EIGHTH EDITION, 2017
DESIGN METHOD: LOAD AND RESISTANCE FACTOR DESIGN, YIELD LINE METHOD

REINFORCED CONCRETE:
CONCRETE CLASS D (BOX CULVERT): f'_c = 4,500 PSI
REINFORCING STEEL: f_y = 60,000 PSI

LOADING:
AT-REST EARTH (FLUID) PRESSURE FOR CONCRETE STEM DESIGN = 55 PCF FOR 2 (MIN.) : 1 SLOPED BACKFILL
ACTIVE EARTH (FLUID) PRESSURE FOR CONCRETE FOOTING DESIGN = 40 PCF FOR 2 (MIN.) : 1 SLOPED BACKFILL
LIVE LOAD SURCHARGE = 2'
MINIMUM RESISTANCE FOR SOIL BEARING = 5.5 KSF
SOIL BEARING RESISTANCE FACTOR = 0.45

GENERAL NOTES:

1. ALL EXPOSED CONCRETE CORNERS SHALL BE CHAMFERED ¾ IN.
2. WINGWALL FOOTING AND FLOOR OF BOX CULVERT SHALL BE PLACED MONOLITHICALLY.
3. DIMENSIONS "h", "k", "L", "m" AND ANGLE "θ" FOR WINGWALL SHALL BE AS SHOWN ON THE PLANS.
4. MINIMUM CLASS B LAP SPLICE LENGTH FOR BLACK REINFORCING BARS:

BAR SIZE:	#4	#5	#6	#7
SPLICE LENGTH:	1'- 6"	1'-11"	2'-3"	2'-7"

5. DESIGN DOES NOT CONSIDER ANY SCOUR EFFECTS.
6. WINGWALL DRAIN SHALL BE REQUIRED IF "h" ≥ 12.0 FT., SEE SHEET 2 OF 2 FOR DETAILS.

Computer File Information		Sheet Revisions	
Creation Date: 07/31/19		Date:	Comments
Designer Initials: JBK	(R-X)		
Last Modification Date: 07/31/19	(R-X)		
Detailer Initials: LTA	(R-X)		
CAD Ver.: MicroStation V8 Scale: Not to Scale Units: English	(R-X)		

Colorado Department of Transportation
2829 West Howard Place
CDOT HQ, 3rd Floor
Denver, CO 80204
Phone: 303-757-9021 FAX: 303-757-9868
Project Development Branch JBK

WINGWALLS FOR PIPE OR BOX CULVERTS
Issued by the Project Development Branch: July 31, 2019

STANDARD PLAN NO.
M-601-20
Standard Sheet No. 1 of 2
Project Sheet Number:

c-BARS AND REINFORCING STEEL QUANTITY (EXCLUDE TOE WALL)

✱ REINFORCING STEEL QUANTITY INCLUDES STEM AND FOOTING QUANTITIES, BUT DOES NOT INCLUDE TOE WALL QUANTITIES.

L (MULTIPLE OF m)		≤ (1.0 x m)		≤ (1.25 x m)		≤ (1.5 x m)		≤ (1.75 x m)		≤ (2.0 x m)	
m (FT)	k (FT)	c-BARS	✱ REINF. LB./L.F.	c-BARS	✱ REINF. LB./L.F.	c-BARS	✱ REINF. LB./L.F.	c-BARS	✱ REINF. LB./L.F.	c-BARS	✱ REINF. LB./L.F.
14	4	#4 @ 10"	53.60	#5 @ 10"	57.95	#5 @ 10"	57.10	#5 @ 8"	60.22	#5 @ 7"	62.43
	5	#4 @ 10"	55.86	#5 @ 10"	60.46	#5 @ 10"	59.60	#5 @ 8"	62.89	#5 @ 7"	65.23
	6	#5 @ 10"	64.43	#6 @ 10"	70.60	#6 @ 10"	69.69	#6 @ 8"	74.93	#6 @ 8"	74.45
	7	#5 @ 10"	67.29	#6 @ 10"	73.76	#6 @ 10"	72.83	#6 @ 8"	78.32	#6 @ 8"	77.84
	8	#5 @ 8"	74.71	#6 @ 8"	83.46	#6 @ 7"	87.09	#6 @ 6"	92.54	#7 @ 7"	99.47
	9	#5 @ 8"	78.10	#6 @ 8"	87.23	#6 @ 7"	91.03	#6 @ 6"	96.72	#7 @ 7"	103.93
13	4	#4 @ 10"	50.51	#4 @ 10"	49.25	#5 @ 10"	53.71	#5 @ 10"	53.09	#5 @ 10"	52.36
	5	#4 @ 10"	52.66	#4 @ 10"	51.37	#5 @ 10"	56.09	#5 @ 10"	55.46	#5 @ 10"	54.99
	6	#4 @ 10"	54.92	#5 @ 10"	59.48	#5 @ 9"	60.31	#6 @ 9"	67.56	#6 @ 9"	67.08
	7	#4 @ 10"	57.36	#5 @ 10"	62.16	#5 @ 9"	63.05	#6 @ 9"	70.66	#6 @ 9"	70.16
	8	#5 @ 10"	66.39	#6 @ 10"	72.82	#6 @ 8"	77.97	#6 @ 7"	81.68	#6 @ 7"	81.19
	9	#5 @ 10"	69.37	#6 @ 10"	76.10	#6 @ 8"	81.49	#6 @ 7"	85.37	#6 @ 7"	84.87
12	2	#4 @ 10"	43.91	#4 @ 10"	42.65	#4 @ 10"	41.82	#4 @ 10"	41.22	#4 @ 10"	40.78
	3	#4 @ 10"	45.82	#4 @ 10"	44.55	#4 @ 10"	43.71	#4 @ 10"	43.11	#4 @ 10"	42.66
	4	#4 @ 10"	47.80	#4 @ 10"	46.51	#4 @ 10"	45.65	#5 @ 10"	50.06	#5 @ 10"	49.59
	5	#4 @ 10"	49.84	#4 @ 10"	48.53	#4 @ 10"	47.66	#5 @ 10"	52.33	#5 @ 10"	51.85
	6	#4 @ 10"	51.99	#4 @ 10"	50.65	#5 @ 10"	55.34	#5 @ 8"	58.41	#5 @ 8"	57.93
	7	#4 @ 10"	54.30	#5 @ 10"	58.80	#5 @ 10"	57.87	#5 @ 8"	61.10	#5 @ 8"	60.61
	8	#5 @ 10"	62.91	#5 @ 10"	61.45	#5 @ 7"	67.46	#5 @ 6"	70.68	#5 @ 6"	70.20
	9	#5 @ 10"	65.64	#5 @ 10"	64.15	#5 @ 7"	70.44	#5 @ 6"	73.82	#5 @ 6"	73.33
11	2	#4 @ 10"	41.70	#4 @ 10"	40.42	#4 @ 10"	39.57	#4 @ 10"	38.96	#4 @ 10"	38.50
	3	#4 @ 10"	43.57	#4 @ 10"	42.27	#4 @ 10"	41.40	#4 @ 10"	40.79	#4 @ 10"	40.33
	4	#4 @ 10"	45.48	#4 @ 10"	44.16	#4 @ 10"	43.28	#4 @ 10"	42.66	#4 @ 9"	43.09
	5	#4 @ 10"	47.46	#4 @ 10"	46.10	#4 @ 10"	45.21	#4 @ 10"	44.58	#4 @ 9"	45.06
	6	#4 @ 10"	49.52	#4 @ 10"	48.14	#4 @ 9"	48.23	#5 @ 10"	51.88	#5 @ 10"	51.38
	7	#4 @ 10"	51.73	#4 @ 10"	50.31	#4 @ 9"	50.43	#5 @ 10"	54.29	#5 @ 10"	53.78
	8	#4 @ 10"	54.00	#5 @ 10"	58.44	#5 @ 10"	57.45	#5 @ 8"	60.64	#5 @ 7"	62.92
	9	#4 @ 10"	56.20	#5 @ 10"	60.87	#5 @ 10"	59.85	#5 @ 8"	63.21	#5 @ 7"	65.60
10	2	#4 @ 10"	39.84	#4 @ 10"	38.53	#4 @ 10"	37.65	#4 @ 10"	37.03	#4 @ 10"	36.57
	3	#4 @ 10"	41.68	#4 @ 10"	40.35	#4 @ 10"	39.47	#4 @ 10"	38.84	#4 @ 10"	38.36
	4	#4 @ 10"	43.58	#4 @ 10"	42.22	#4 @ 10"	41.31	#4 @ 10"	40.67	#4 @ 10"	40.19
	5	#4 @ 10"	45.53	#4 @ 10"	44.14	#4 @ 10"	43.21	#4 @ 10"	42.56	#4 @ 10"	42.07
	6	#4 @ 10"	47.58	#4 @ 10"	46.14	#4 @ 10"	45.20	#4 @ 10"	44.53	#4 @ 10"	44.03
	7	#4 @ 10"	49.79	#4 @ 10"	48.31	#4 @ 10"	47.34	#5 @ 10"	51.97	#5 @ 10"	51.45
	8	#4 @ 10"	52.06	#4 @ 10"	50.54	#4 @ 10"	49.54	#5 @ 10"	54.43	#5 @ 10"	53.89
9	2	#4 @ 10"	38.01	#4 @ 10"	36.75	#4 @ 10"	35.85	#4 @ 10"	35.21	#4 @ 10"	34.73
	3	#4 @ 10"	39.93	#4 @ 10"	38.56	#4 @ 10"	37.64	#4 @ 10"	36.99	#4 @ 10"	36.51
	4	#4 @ 10"	41.81	#4 @ 10"	40.40	#4 @ 10"	39.47	#4 @ 10"	38.81	#4 @ 10"	38.31
	5	#4 @ 10"	43.75	#4 @ 10"	42.30	#4 @ 10"	41.35	#4 @ 10"	40.67	#4 @ 10"	40.17
	6	#4 @ 10"	45.79	#4 @ 10"	44.30	#4 @ 10"	43.31	#4 @ 10"	42.62	#4 @ 10"	42.10
	7	#4 @ 10"	48.04	#4 @ 10"	46.50	#4 @ 10"	45.49	#4 @ 10"	44.77	#5 @ 10"	49.29
	8	#4 @ 10"	50.43	#4 @ 10"	48.84	#4 @ 10"	47.80	#4 @ 10"	47.06	#5 @ 10"	51.83
8	2	#4 @ 10"	36.41	#4 @ 10"	35.01	#4 @ 10"	34.08	#4 @ 10"	33.42	#4 @ 10"	32.92
	3	#4 @ 10"	38.23	#4 @ 10"	36.80	#4 @ 10"	35.85	#4 @ 10"	35.18	#4 @ 10"	34.67
	4	#4 @ 10"	40.09	#4 @ 10"	38.61	#4 @ 10"	37.64	#4 @ 10"	36.95	#4 @ 10"	36.44
	5	#4 @ 10"	41.99	#4 @ 10"	40.47	#4 @ 10"	39.47	#4 @ 10"	38.76	#4 @ 10"	38.24
	6	#4 @ 10"	43.97	#4 @ 10"	42.40	#4 @ 10"	41.36	#4 @ 10"	40.64	#4 @ 10"	40.10
	7	#4 @ 10"	46.19	#4 @ 10"	44.56	#4 @ 10"	43.49	#4 @ 10"	42.74	#4 @ 10"	42.18
7	2	#4 @ 10"	34.90	#4 @ 10"	33.44	#4 @ 10"	32.47	#4 @ 10"	31.78	#4 @ 10"	31.27
	3	#4 @ 10"	36.73	#4 @ 10"	35.23	#4 @ 10"	34.23	#4 @ 10"	33.53	#4 @ 10"	33.00
	4	#4 @ 10"	38.59	#4 @ 10"	37.04	#4 @ 10"	36.01	#4 @ 10"	35.29	#4 @ 10"	34.75
	5	#4 @ 10"	40.48	#4 @ 10"	38.86	#4 @ 10"	37.80	#4 @ 10"	37.06	#4 @ 10"	36.50
	6	#4 @ 10"	42.39	#4 @ 10"	40.71	#4 @ 10"	39.61	#4 @ 10"	38.84	#4 @ 10"	38.26

L (MULTIPLE OF m)		≤ (2.25 x m)		≤ (2.5 x m)		≤ (2.75 x m)		≤ (3.0 x m)		≤ (3.25 x m)		≤ (3.5 x m)	
m (FT)	k (FT)	c-BARS	✱ REINF. LB./L.F.	c-BARS	✱ REINF. LB./L.F.	c-BARS	✱ REINF. LB./L.F.	c-BARS	✱ REINF. LB./L.F.	c-BARS	✱ REINF. LB./L.F.	c-BARS	✱ REINF. LB./L.F.
14	4	#5 @ 7"	62.09	#5 @ 6"	65.38	#5 @ 6"	65.15	#6 @ 8"	67.10	#6 @ 8"	66.94	#6 @ 7"	70.66
	5	#5 @ 7"	64.88	#5 @ 6"	68.34	#5 @ 6"	68.11	#6 @ 8"	70.17	#6 @ 8"	70.00	#6 @ 7"	73.90
	6	#6 @ 7"	78.30	#6 @ 6"	83.64	#6 @ 6"	83.40	#6 @ 6"	83.22	#6 @ 6"	83.05	#7 @ 7"	89.64
	7	#6 @ 7"	81.87	#6 @ 6"	87.45	#6 @ 6"	87.21	#6 @ 6"	87.02	#6 @ 6"	86.86	#7 @ 7"	93.73
	8	#7 @ 7"	99.08	#7 @ 6"	107.11	#7 @ 6"	106.86	#7 @ 6"	106.66	#7 @ 6"	106.49	#7 @ 6"	106.35
	9	#7 @ 7"	103.54	#7 @ 6"	111.90	#7 @ 6"	111.65	#7 @ 6"	111.45	#7 @ 6"	111.28	#7 @ 6"	111.13
13	4	#5 @ 9"	53.85	#5 @ 8"	55.54	#5 @ 7"	57.85	#5 @ 7"	57.67	#5 @ 7"	57.51	#6 @ 9"	59.93
	5	#5 @ 9"	56.29	#5 @ 8"	58.08	#5 @ 7"	60.51	#5 @ 7"	60.33	#5 @ 7"	60.17	#6 @ 9"	62.72
	6	#6 @ 9"	66.70	#6 @ 8"	69.53	#6 @ 8"	69.28	#6 @ 7"	73.12	#6 @ 7"	72.95	#6 @ 7"	72.81
	7	#6 @ 9"	69.78	#6 @ 8"	72.75	#6 @ 8"	72.50	#6 @ 7"	76.52	#6 @ 7"	76.35	#6 @ 7"	76.20
	8	#6 @ 6"	86.67	#6 @ 6"	86.37	#7 @ 7"	93.18	#7 @ 7"	92.97	#7 @ 7"	92.80	#7 @ 7"	92.64
	9	#6 @ 6"	90.59	#6 @ 6"	90.29	#7 @ 7"	97.39	#7 @ 7"	97.18	#7 @ 7"	97.00	#7 @ 7"	96.85
12	2	#4 @ 9"	41.29	#5 @ 10"	44.61	#5 @ 10"	44.37	#5 @ 10"	44.18	#5 @ 10"	44.01	#5 @ 10"	43.87
	3	#4 @ 9"	43.22	#5 @ 10"	46.75	#5 @ 10"	46.51	#5 @ 10"	46.32	#5 @ 10"	46.15	#5 @ 10"	46.01
	4	#5 @ 10"	49.23	#5 @ 10"	48.94	#5 @ 10"	48.69	#5 @ 9"	50.00	#5 @ 8"	51.72	#5 @ 8"	51.57
	5	#5 @ 10"	51.48	#5 @ 10"	51.19	#5 @ 10"	50.94	#5 @ 9"	52.33	#5 @ 8"	54.14	#5 @ 8"	54.00
	6	#6 @ 10"	60.60	#6 @ 10"	60.29	#6 @ 9"	62.42	#6 @ 9"	62.22	#6 @ 9"	62.04	#6 @ 8"	64.89
	7	#6 @ 10"	63.43	#6 @ 10"	63.11	#6 @ 9"	65.35	#6 @ 9"	65.15	#6 @ 9"	64.97	#6 @ 8"	67.96
	8	#6 @ 7"	76.44	#6 @ 7"	76.13	#6 @ 7"	75.87	#6 @ 6"	81.30	#6 @ 6"	81.12	#6 @ 6"	80.98
	9	#6 @ 7"	79.86	#6 @ 7"	79.54	#6 @ 7"	79.28	#6 @ 6"	84.95	#6 @ 6"	84.77	#6 @ 6"	84.62
11	2	#4 @ 10"	38.15	#4 @ 10"	37.87	#4 @ 10"	37.63	#4 @ 9"	38.25	#5 @ 10"	41.46	#5 @ 10"	41.31
	3	#4 @ 10"	39.97	#4 @ 10"	39.69	#4 @ 10"	39.45	#4 @ 9"	40.12	#5 @ 10"	43.54	#5 @ 10"	43.39
	4	#5 @ 10"	46.57	#5 @ 10"	46.27	#5 @ 10"	46.02	#5 @ 10"	45.82	#5 @ 10"	45.65	#5 @ 10"	45.50
	5	#5 @ 10"	48.74	#5 @ 10"	48.44	#5 @ 10"	48.19	#5 @ 10"	47.99	#5 @ 10"	47.81	#5 @ 10"	47.67
	6	#5 @ 9"	52.57	#5 @ 9"	52.27	#5 @ 8"	53.99	#5 @ 8"	53.79	#5 @ 7"	56.16	#5 @ 7"	56.01
	7	#5 @ 9"	55.04	#5 @ 9"	54.73	#5 @ 8"	56.55	#5 @ 8"	56.35	#5 @ 7"	58.84	#5 @ 7"	58.70
	8	#5 @ 6"	66.25	#5 @ 6"	65.94	#5 @ 6"	65.69	#6 @ 8"	67.76	#6 @ 8"	67.57	#6 @ 7"	71.45
	9	#5 @ 6"	69.09	#5 @ 6"	68.78	#5 @ 6"	68.52	#6 @ 8"	70.69	#6 @ 8"	70.51	#6 @ 7"	74.57
10	2	#4 @ 10"	36.20	#4 @ 10"	35.91	#4 @ 10"	35.67	#4 @ 10"	35.48	#4 @ 9"	36.07	#4 @ 9"	35.93
	3	#4 @ 10"	38.00	#4 @ 10"	37.71	#4 @ 10"	37.46	#4 @ 10"	37.27	#4 @ 9"	37.91	#4 @ 9"	37.76
	4	#4 @ 10"	39.82	#4 @ 10"	39.53	#4 @ 10"	39.28	#4 @ 10"	39.08	#4 @ 9"	39.77	#4 @ 9"	39.63
	5	#5 @ 10"	46.44	#5 @ 10"	46.13	#5 @ 10"	45.87	#5 @ 10"	45.67	#5 @ 10"	45.49	#5 @ 10"	45.34
	6	#5 @ 10"	48.67	#5 @ 10"	48.35	#5 @ 10"	48.08	#5 @ 10"	47.88	#5 @ 10"	47.69	#5 @ 10"	47.54
	7	#5 @ 10"	51.04	#5 @ 9"	52.29	#5 @ 9"	52.03	#5 @ 8"	53.79	#5 @ 8"	53.61	#5 @ 7"	56.00
	8	#5 @ 10"	53.47	#5 @ 9"	54.80	#5 @ 9"	54.53	#5 @ 8"	56.39	#5 @ 8"	56.20	#5 @ 7"	58.72
9	2	#4 @ 10"	34.36	#4 @ 10"	34.06	#4 @ 10"	33.81	#4 @ 10"	33.61	#4 @ 10"	33.44	#4 @ 10"	33.30
	3	#4 @ 10"	36.13	#4 @ 10"	35.83	#4 @ 10"	35.58	#4 @ 10"	35.38	#4 @ 10"	35.21	#4 @ 10"	35.06
	4	#4 @ 10"	37.93	#4 @ 10"	37.63	#4 @ 10"	37.37	#4 @ 10"	37.17	#4 @ 10"	36.99	#4 @ 10"	36.84
	5	#4 @ 10"	39.78	#4 @ 10"	39.47	#4 @ 10"	39.20	#4 @ 9"	39.86	#5 @ 10"	43.28	#5 @ 10"	43.12
	6	#4 @ 10"	41.71	#4 @ 10"	41.39	#4 @ 10"	41.12	#4 @ 9"	41.82	#5 @ 10"	45.46	#5 @ 10"	45.30
	7	#5 @ 10"	48.86	#5 @ 10"	48.53	#5 @ 10"	48.24	#5 @ 10"	48.03	#5 @ 10"	47.84	#5 @ 10"	47.67
	8	#5 @ 10"	51.40	#5 @ 10"	51.05	#5 @ 10"	50.77	#5 @ 10"	50.54	#5 @ 10"	50.35	#5 @ 10"	50.18
8	2	#4 @ 10"	32.54	#4 @ 10"	32.23	#4 @ 10"	31.97	#4 @ 10"	31.77	#4 @ 10"	31.59	#4 @ 10"	31.44
	3	#4 @ 10"	34.28	#4 @ 10"	33.97	#4 @ 10"	33.70	#4 @ 10"	33.50	#4 @ 10"	33.32	#4 @ 10"	33.17
	4	#4 @ 10"	36.04	#4 @ 10"	35.72	#4 @ 10"	35.45	#4 @ 10"	35.25	#4 @ 10"	35.07	#4 @ 10"	34.91
	5	#4 @ 10"	37.83	#4 @ 10"	37.50	#4 @ 10"	37.23	#4 @ 10"	37.02	#4 @ 10"	36.84	#4 @ 10"	36.68
	6	#4 @ 10"	39.68	#4 @ 10"	39.35	#4 @ 10"	39.07	#4 @ 9"	43.33	#5 @ 10"	43.13	#5 @ 10"	42.96
	7	#4 @ 10"	41.75	#4 @ 10"	41.41	#4 @ 10"	41.13	#4 @ 9"	45.65	#5 @ 10"	45.45	#5 @ 10"	45.28
7	2	#4 @ 10"	30.86	#4 @ 10"	30.54	#4 @ 10"	30.27	#4 @ 10"	30.06	#4 @ 10"	29.88	#4 @ 10"	29.72
	3	#4 @ 10"	32.59	#4 @ 10"	32.26	#4 @ 10"	31.99	#4 @ 10"	31.78	#4 @ 10"	31.59	#4 @ 10"	31.43
	4	#4 @ 10"	34.33	#4 @ 10"	33.99	#4 @ 10"	33.71	#4 @ 10"	33.50	#4 @ 10"	33.31	#4 @ 10"	33.14
	5	#4 @ 10"	36.07	#4 @ 10"	35.73	#4 @ 10"	35.44	#4 @ 10"	35.22	#4 @ 10"	35.03	#4 @ 10"	34.86
	6	#4 @ 10"	37.82	#4 @ 10"	37.47	#4 @ 10"	37.17	#4 @ 10"	36.95	#4 @ 10"	36.75	#4 @ 10"	36.58

EXAMPLE:

SELECT THE c-BARS SIZE, SPACING AND STEEL QUANTITY FOR A 25.0 FEET LONG WINGWALL WITH m = 11.8 FT. AND k = 6.3 FT.

SOLUTION:

1. DETERMINE WINGWALL LENGTH IN MULTIPLE OF m:
   L / m = 25.0 / 11.8 = 2.12
   L = (2.12 x m), USE L ≤ (2.25 x m)
2. ROUND TO REAREST WHOLE NUMBER FOR m AND k:
   m = 11.8 FT., USE m = 12.0 FT.
   k = 6.3 FT., USE k = 6.0 FT.
3. DETERMINE c-BARS BY USING THE TABLE:
   L ≤ (2.25 x m)
   m = 12
   k = 6
   c-BARS: #6 @ 10"
   REINF. STEEL = 60.60 LB / LF
4. DETERMINE REINFORCING STEEL QUANTITY OF WHOLE WINGWALL:
   REINFORCING STEEL QUANTITY = 25.0 x 60.60 = 1,515 LB.

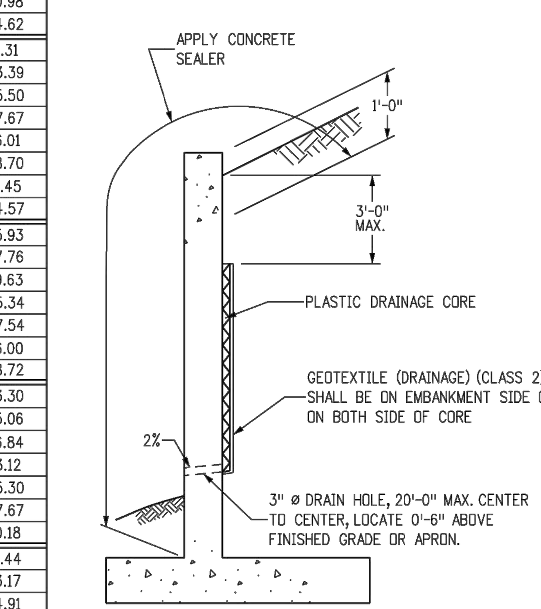

LIMITS OF CONCRETE SEALER AND WINGWALL DRAIN DETAILS

NOTES:
1. THE GEOCOMPOSITE SHALL BE SECURED TO THE WALL TO PREVENT MOVEMENT DURING BACKFILLING.
2. COST OF GEOCOMPOSITE DRAIN AND CONCRETE SEALER SHALL BE INCLUDED IN THE WORK.

Computer File Information		Sheet Revisions	
Creation Date: 07/31/19		Date:	Comments
Designer Initials: JBK	(R-X)		
Last Modification Date: 07/31/19	(R-X)		
Detailer Initials: LTA	(R-X)		
CAD Ver.: MicroStation V8 Scale: Not to Scale Units: English	(R-X)		

Colorado Department of Transportation
2829 West Howard Place
CDOT HQ, 3rd Floor
Denver, CO 80204
Phone: 303-757-9021 FAX: 303-757-9868
Project Development Branch JBK

WINGWALLS FOR PIPE OR BOX CULVERTS
Issued by the Project Development Branch: July 31, 2019

STANDARD PLAN NO.
M-601-20
Standard Sheet No. 2 of 2
Project Sheet Number:

GENERAL STRUCTURE NOTES:

ALL WORK SHALL BE DONE IN ACCORDANCE WITH CITY OR COUNTY STANDARD CONSTRUCTION SPECIFICATIONS.
EXCEPT AS SHOWN IN THE PLANS, STRUCTURE EXCAVATION AND BACKFILL SHALL BE IN ACCORDANCE WITH CDOT M–206–1, AND M–206–2 EXPANSION JOINT MATERIAL SHALL MEET AASHTO SPECIFICATION M–213

THE INFORMATION SHOWN ON THESE PLANS CONCERNING THE TYPE AND LOCATION OF UNDERGROUND UTILITIES IS NOT GUARANTEED TO BE ACCURATE OR ALL INCLUSIVE. THE CONTRACTOR IS RESPONSIBLE FOR MAKING HIS OWN DETERMINATION AS TO THE TYPE AND LOCATION OF UNDERGROUND UTILITIES AS MAY BE NECESSARY TO AVOID DAMAGE THERETO. THE CONTRACTOR SHALL CONTACT THE UTILITY NOTIFICATION CENTER OF COLORADO A 1–800–922–1987 AT LEAST 2 DAYS (NOT INCLUDING THE DAY OF NOTIFICATION) PRIOR TO ANY EXCAVATION OF OTHER.

THE CONTRACTOR IS SOLELY RESPONSIBLE FOR DESIGNING AND PROVIDING ALL BRACING AND SHORING AS REQUIRED FOR THE PROTECTION OF LIFE AND PROPERTY DURING CONSTRUCTION. THE CONTRACTOR IS SOLELY RESPONSIBLE FOR THE EXCAVATION PROCEDURES INCLUDING ANY SHORING REQUIRED FOR THE PROTECTION OF LIFE AND PROPERTY DURING CONSTRUCTION.

THE CONTRACTOR IS SOLELY RESPONSIBLE FOR ALL METHODS AND MEANS OF CONSTRUCTION AS WELL AS ALL JOB SITE SAFETY & HEALTH PRECAUTIONS.

ALL SOILS WORK INCLUDING (BUT NOT LIMITED TO) PIER DRILLING AND CONSTRUCTION, SOILS EXCAVATION, FILL PLACEMENT, AND STRUCTURE BACKFILL SHALL BE IN ACCORDANCE WITH THE PROJECT GEOTECHNICAL REPORT, UNLESS MORE STRINGENT REQUIREMENTS ARE PRINTED ON THE "IRRIGATION NOTES".

BACKFILL SHALL NOT BEGIN UNTIL CONCRETE WALLS REACH COMPRESSION STRENGTH AT LEAST 80 PERCENT OF THE REQUIRED 28 DAY STRENGTH, 0.8fc'.

REINFORCED CONCRETE:
CLASS D CONCRETE: fc'=4,500 psi
REINFORCING STEEL: fy=60,000 psi
ALL CAST–IN–PLACE CONCRETE SHALL BE CLASS D UNLESS NOTED OTHERWISE.

REINFORCING BARS SHALL CONFORM TO ASTM A615, GRADE 60 U.N.O.
REINFORCING BARS TO BE WELDED SHALL CONFORM TO ASTM A706, GRADE 60.
ALL REINFORCING, EXCEPT PIER REINFORCING, SHALL BE EPOXY COATED AND SHALL CONFORM TO ASTM A775.
ALL REINFORCING SHALL HAVE 2" CONCRETE COVER, U.N.O. ON PLANS, 3" AGAINST GROUND (BOTTOM SLAB)
ALL REINFORCING SHALL BE HOOKED AROUND CORNERS AND LAPPED, SEE DETAILS.
ALL LAP SPLICE LOCATIONS SHALL BE SUBMITTED TO ENGINEER FOR REVIEW AND APPROVAL PRIOR TO CONSTRUCTION.

THE FOLLOWING TABLE GIVES THE MINIMUM CLASS B (STAGGERED) LAP SPLICE LENGTH FOR EPOXY COATED REINFORCING BARS PLACE IN ACCORDANCE WITH SUBSECTION 602.06. THESE SPLICE LENGTHS SHALL BE INCREASED BY 25% FOR BARS SPACED AT LESS THAN 6" ON CENTER. INCREASED BY 40% FOR HORIZONTAL BARS WITH MORE THAN 12" OF CONCRETE BELOW (TOP BARS.), AND INCREASED BY 75% IF BOTH CONDITIONS EXIST. THE INCREASES ABOVE FOR #6 THRU #11 BARS MAY BE 25%, 13%, AND 42% RESPECTIVELY.

#4	1'–3"	#5	1'–7"
#6	2'–5"	#7	2'–10"
#8	3'–8"	#9	4'–8"
#10	5'–11"	#11	7'–3"

WHEN THE CONTRACTOR ELECTS TO SUBSTITUTE EPOXY COATED REINFORCEMENT FOR BLACK REINFORCING BARS. THE MINIMUM LAP SPLICE SHALL BE AS DESCRIBED ABOVE.

STATIONS, ELEVATIONS, AND DIMENSIONS CONTAINED IN THESE PLANS ARE CALCULATED FROM A RECENT FIELD SURVEY. THE CONTRACTOR SHALL VERIFY ALL DEPENDENT DIMENSIONS IN THE FIELD BEFORE ORDERING OR FABRICATING ANY MATERIAL.

THE CONTRACTOR SHALL SUBMIT REINFORCING STEEL PLACING DRAWINGS (PRIOR TO CONSTRUCTION) TO THE ENGINEER FOR REVIEW FOR CONFORMANCE WITH THE DESIGN DRAWINGS. THE DESIGN DRAWINGS SHALL GOVERN OVER PLACING DRAWINGS IN ALL CASES UNLESS MODIFICATIONS ARE APPROVED IN WRITING BY ENGINEER.

THE CONTRACTOR SHALL BE RESPONSIBLE FOR THE STABILITY OF THE STRUCTURE DURING CONSTRUCTION.

E.F. =	EACH FACE	O.F. =	OUTSIDE FACE
F.E. =	FAR FACE	T.&B. =	TOP AND BOTTOM
N.F. =	NEAR FACE	T.F. =	TOP FACE
I.F. =	INSIDE FACE	B.F. =	BOTTOM FACE
T.W. =	TWO WAY	T.F. =	TWO FACES
E.S. =	EACH SIDE	Lp =	LAP LENGTH

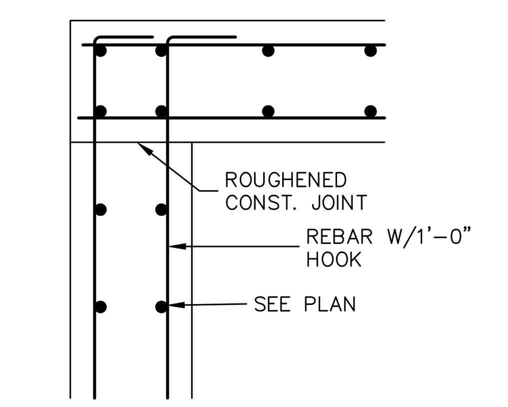

TYPICAL TOP CORNER WALL SECTION DETAIL

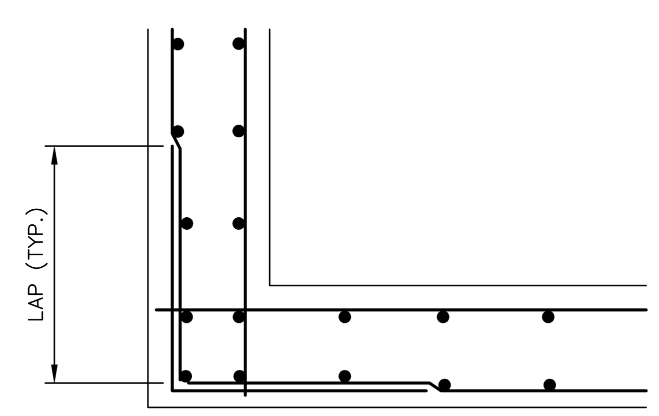

TYPICAL WALL CORNER PLAN VIEW

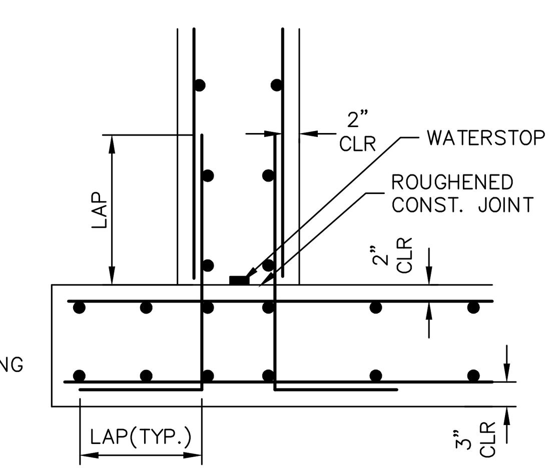

TYPICAL BOTTOM CORNER WALL SECTION DETAIL

CAST-IN-PLACE STRUCTURAL NOTES:

1. ALL CONSTRUCTION JOINTS SHALL BE THOROUGHLY CLEANED BEFORE FRESH CONCRETE IS POURED.
2. ALL CONSTRUCTION JOINTS NOT SHOWN ON THE PLANS SHALL BE APPROVED BY THE ENGINEER.
3. THE CONTRACTOR IS RESPONSIBLE FOR THE STABILITY OF THE STRUCTURE DURING CONSTRUCTION.
4. DO NOT BACKFILL UNTIL CONCRETE HAS REACHED DESIGN STRENGTH, F'c.
5. ALL EXPOSED CONCRETE CORNERS SHALL BE CHAMFERED ¾".
6. CONTRACTOR SHALL SUBMIT STEEL REINFORCING SHOP DRAWINGS FOR ALL CAST–IN–PLACE STRUCTURES FOR ENGINEER'S APPROVAL PRIOR TO CONSTRUCTION.
7. HEADWALLS FOR PIPES SHALL BE CONSTRUCTED PER CDOT M–601–10.
8. WINGWALLS SHALL BE CONSTRUCTED PER CDOT M–601–20.

AS-BUILTS
05/24/2023
SF-21-023

COLORADO REGISTERED PROFESSIONAL ENGINEER 32314

EPC PCD 1/31/22

Know what's below. Call before you dig.

ENGINEER'S STATEMENT

STANDARD DETAILS SHOWN WERE REVIEWED ONLY AS TO THEIR APPLICATION ON THIS PROJECT

12/15/21
DATE

MIKE A. BRAMLETT, P.E.
COLORADO P.E. 32314
FOR AND ON BEHALF OF JR ENGINEERING, LLC

UNTIL SUCH TIME AS THESE DRAWINGS ARE APPROVED BY THE APPROPRIATE REVIEWING AGENCIES, JR ENGINEERING APPROVES THEIR USE ONLY FOR THE PURPOSES DESIGNATED BY WRITTEN AUTHORIZATION.

PREPARED FOR
MONUMENT HILL CM LLC
1864 WOODMOOR DR, STE 100
COLORADO SPRINGS, CO 80920
ATTN: JOE DESJARDIN
(719) 476–0800
JDESJARDIN@PROTERRACO.COM

J·R ENGINEERING
A Westrian Company
Centennial 303–740–9393 • Colorado Springs 719–593–2593
Fort Collins 970–491–9888 • www.jrengineering.com

No.	REVISION	BY	DATE

H–SCALE	V–SCALE	DATE	DESIGNED BY	DRAWN BY	CHECKED BY
N/A	N/A	12/15/21	SAV	SAV	

CLOVERLEAF FILING 2
DETAIL SHEET

SHEET 28 OF 28
JOB NO. 25158.01

X:\2510000.all\2515801\Drawings\Sheet Dwgs\CDs\2515801DT01.dwg, DT03, 12/15/2021 6:37:42 AM, CS

CLOVERLEAF FILING NO. 2

LOCATED IN NE1/4 OF SECTION 23 AND NW1/4 OF SECTION 24, TOWNSHIP 11 SOUTH, RANGE 67 WEST OF THE 6TH P.M., COUNTY OF EL PASO, STATE OF COLORADO

CONSTRUCTION PLANS

CONTACTS:

OWNER	CND–CLOVERLEAF, LLC ATTN: AZIZ SIDDIQUI 1111 N. POST OAK ROAD HOUSTON, TX 77055 P~224–415–6619
DEVELOPER	MONUMENT HILL CM LLC ATTN: JOE DESJARDIN 1864 WOODMOOR DRIVE, SUITE 100 COLORADO SPRINGS, CO 80920 P~719–476–0800
CONTRACTOR/OPERATOR (EROSION CONTROL)	MONUMENT HILL CM LLC ATTN: CHARLIE WILLIAMS 1864 WOODMOOR DRIVE, SUITE 100 COLORADO SPRINGS, CO 80920 P~719–492–1933
ENGINEER/SURVEYOR	JR ENGINEERING, LLC ATTN: MIKE A. BRAMLETT 5475 TECH CENTER DRIVE, SUITE 235 COLORADO SPRINGS, CO 80919 P~303–267–6240
FIRE PROTECTION DISTRICT	TRI–LAKES MONUMENT FPD 16055 OLD FOREST POINT, SUITE 103 MONUMENT, CO 80132 P~719–484–0911
DISTRICT	WOODMOOR WATER & SANITATION DISTRICT NO. 1 1845 WOODMOOR DRIVE MONUMENT, CO 80132 P~719–488–2525 EXT. 0
EL PASO COUNTY	PLANNING AND COMMUNITY DEVELOPMENT 2880 INTERNATIONAL CIRCLE, SUIT 110 COLORADO SPRINGS, CO 80910 P~719–520–6819
	DEPARTMENT OF PUBLIC WORKS 3275 AKERS DR COLORADO SPRINGS, CO 80922 P~719–529–6460

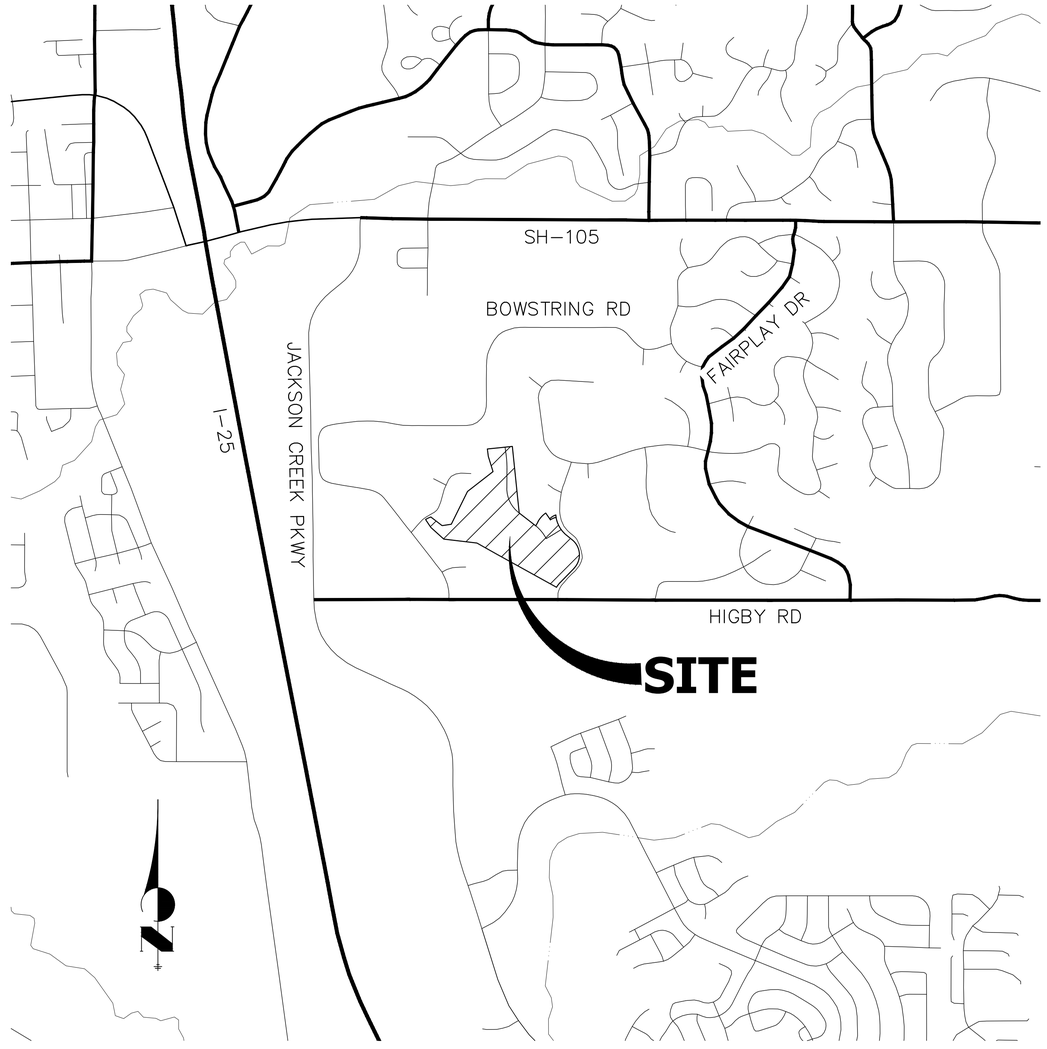

PROJECT LOCATION MAP

SCALE: 1"=1,000'

SHEET INDEX

1	COVER SHEET
2	LEGEND AND GENERAL NOTES
3–5	HORIZONTAL CONTROL PLAN
6	TYPICAL SECTIONS
7–14	ROADWAY PLAN AND PROFILE
15	MILL AND OVERLAY PLAN
16	CURB RETURN PROFILES
17–18	SIGNAGE AND STRIPING PLAN
19–20	COUNTY DETAILS

AS-BUILTS
05/24/2023
SF-2123

AB: INDICATES AS-BUILT INFORMATION. ANY INFORMATION NOT CROSSED OUT IS ASSUMED TO BE AS-BUILT INFORMATION.

OWNER/DEVELOPER STATEMENT

I, THE OWNER/DEVELOPER HAVE READ AND WILL COMPLY WITH ALL OF THE REQUIREMENTS SPECIFIED IN THESE DETAILED PLANS AND SPECIFICATIONS.

Joseph W. DesJardin — 11/12/2021

JOE DESJARDIN — DATE

MONUMENT HILL CM LLC
1864 WOODMOOR DRIVE, SUITE 100
MONUMENT, CO. 80132

EL PASO COUNTY STATEMENT

COUNTY PLAN REVIEW IS PROVIDED ONLY FOR GENERAL CONFORMANCE WITH COUNTY DESIGN CRITERIA. THE COUNTY IS NOT RESPONSIBLE FOR THE ACCURACY AND ADEQUACY OF THE DESIGN, DIMENSIONS, AND/OR ELEVATIONS WHICH SHALL BE CONFIRMED AT THE JOB SITE. THE COUNTY THROUGH THE APPROVAL OF THIS DOCUMENT ASSUMES NO RESPONSIBILITY FOR COMPLETENESS AND/OR ACCURACY OF THIS DOCUMENT.

FILED IN ACCORDANCE WITH THE REQUIREMENTS OF THE EL PASO COUNTY LAND DEVELOPMENT CODE, DRAINAGE CRITERIA MANUAL, VOLUMES 1 AND 2, AND ENGINEERING CRITERIA MANUAL AS AMENDED.

IN ACCORDANCE WITH ECM SECTION 1.12, THESE CONSTRUCTION DOCUMENTS WILL BE VALID FOR CONSTRUCTION FOR A PERIOD OF 2 YEARS FROM THE DATE SIGNED BY THE EL PASO COUNTY ENGINEER. IF CONSTRUCTION HAS NOT STARTED WITHIN THOSE 2 YEARS, THE PLANS WILL NEED TO BE RESUBMITTED FOR APPROVAL, INCLUDING PAYMENT OF REVIEW FEES AT THE PLANNING AND COMMUNITY DEVELOPMENT DIRECTORS DISCRETION.

APPROVED
Engineering Department
01/31/2022 5:44:13 PM
dsdmijkamp
EPC Planning & Community Development Department

JENNIFER IRVINE, P.E.

COUNTY ENGINEER/ECM ADMINISTRATOR

ENGINEER'S STATEMENT

THESE DETAILED PLANS AND SPECIFICATIONS WERE PREPARED UNDER MY DIRECT SUPERVISION. SAID PLANS AND SPECIFICATIONS HAVE BEEN PREPARED ACCORDING TO THE CRITERIA ESTABLISHED BY THE COUNTY FOR DETAILED ROADWAY, DRAINAGE, GRADING AND EROSION CONTROL PLANS AND SPECIFICATIONS, AND SAID PLANS AND SPECIFICATIONS ARE IN CONFORMITY WITH APPLICABLE MASTER DRAINAGE PLANS AND MASTER TRANSPORTATION PLANS. SAID PLAN AND SPECIFICATIONS MEET THE PURPOSES FOR WHICH THE PARTICULAR ROADWAY AND DRAINAGE FACILITIES ARE DESIGNED AND ARE CORRECT TO THE BEST OF MY KNOWLEDGE AND BELIEF. I ACCEPT RESPONSIBILITY FOR ANY LIABILITY CAUSED BY ANY NEGLIGENT ACTS, ERRORS OR OMISSIONS ON MY PART IN PREPARATION OF THESE DETAILED PLANS AND SPECIFICATIONS.

11/11/21

MIKE A. BRAMLETT, P.E. — DATE
COLORADO P.E. 32314
FOR AND ON BEHALF OF JR ENGINEERING, LLC

BENCHMARK

NGS MONUMENT T 294 BEING MONUMENTED BY A 3–1/4" BRASS DISC SET IN A 4'X4' BOULDER, LOCATED 1.8 MILES EAST ALONG HIGBY ROAD FROM ITS INTERSECTION WITH JACKSON CREEK PARKWAY, 40 FEET SOUTH OF THE CENTERLINE OF THE ROAD, 6 FEET SOUTH OF A FENCE, AND 6.2 FEET SOUTH OF A WITNESS POST. SAID MONUMENT HAVING A PUBLISHED ELEVATION OF 7247.10 FEET, NAVD88.

BASIS OF BEARING

THE BASIS OF BEARINGS IS THE WESTERLY LINE OF TRACT, B, WOODMOOR PLACER, BEING MONUMENTED BY A 1–1/4" YELLOW PLASTIC CAP ILLEGIBLE AT BOTH ENDS. SAID LINE BEARING N26°20'33"E AS REFERENCED TO COLORADO STATE PLANE CENTRAL ZONE.

THE LOCATIONS OF EXISTING ABOVE GROUND AND UNDERGROUND UTILITIES ARE SHOWN IN AN APPROXIMATE WAY ONLY. THE CONTRACTOR SHALL DETERMINE THE EXACT LOCATION OF ALL EXISTING UTILITIES BEFORE COMMENCING WORK. THE CONTRACTOR SHALL BE FULLY RESPONSIBLE FOR ANY AND ALL DAMAGES WHICH MIGHT BE CAUSED BY HIS FAILURE TO EXACTLY LOCATE AND PRESERVE ANY AND ALL ABOVE GROUND AND UNDERGROUND UTILITIES.

PCD FILE NO. SF–2123

811 Know what's below. Call before you dig.

UNTIL SUCH TIME AS THESE DRAWINGS ARE APPROVED BY THE APPROPRIATE REVIEWING AGENCIES, JR ENGINEERING APPROVES THEIR USE ONLY FOR THE PURPOSES DESIGNATED BY WRITTEN AUTHORIZATION.

PREPARED FOR
MONUMENT HILL CM LLC
1864 WOODMOOR DR., STE. 100
COLORADO SPRINGS, CO 80920
ATTN: JOE DESJARDIN
719–476–0800
JDESJARDIN@PROTERRACO.COM

J·R ENGINEERING
A Westrian Company
Centennial 303–740–9393 • Colorado Springs 719–593–2593
Fort Collins 970–491–9888 • www.jrengineering.com

No.	REVISION	BY	DATE

H–SCALE	1"=1,000'
V–SCALE	N/A
DATE	11/11/21
DESIGNED BY	N/A
DRAWN BY	N/A
CHECKED BY	

CLOVERLEAF FILING NO. 2

COVER SHEET

SHEET 1 OF 20

JOB NO. 25158.01

X:\2510000.all\25158\01\Drawings\Sheet Dwgs\CV01.dwg, CV01, 11/11/2021 11:39:37 AM, CS

LEGEND

- CURB & GUTTER
- W — W — PROPOSED WATER LINE
- S — S — PROPOSED SANITARY SEWER LINE
- PROPOSED STORM SEWER W/MANHOLE
- PROPOSED TOP OF SLOPE
- PROPOSED TOE OF SLOPE
- PROPOSED RIGHT OF WAY
- EASEMENT LINE
- EXISTING RIGHT OF WAY
- EXISTING BOUNDARY LINE
- EXISTING PROPERTY LINE
- EXISTING CURB & GUTTER
- G — G — EXISTING GASLINE
- W — W — EXISTING WATERLINE
- E — E — EXISTING ELECTRIC LINE
- X — X — EXISTING FENCE
- S — S — EXISTING SANITARY SEWER W/MANHOLE
- EXISTING STORM SEWER W/MANHOLE
- EXISTING EDGE OF ASPHALT
- EXISTING EDGE OF CONCRETE
- EXISTING BOUNDARY LINE
- EXISTING PROPERTY LINE
- EXISTNG EASEMENT LINE
- PROPOSED PLUG W/ THRUST BLOCK
- PROPOSED FIRE HYDRANT
- PROPOSED WATER TEE
- PROPOSED WATER BEND
- PROPOSED FLARED END SECTION
- PROPOSED WATER VALVE
- EXISTING FIRE HYDRANT
- EXISTING ELECTRIC PEDESTAL
- EXISTING WATER MANHOLE
- EXISTING TELEPHONE PEDESTAL
- EXISTING WATER VALVE
- EXISTING FIRE HYDRANT
- EXISTING VALVE
- EXISTING STREET LIGHT
- EXISTING SIGN
- EXISTING TELEPHONE MANHOLE
- EXISTING FLARED END SECTION
- EXISTING WATER VALVE
- PROPOSED FLOW DIRECTION

STANDARD NOTES FOR EL PASO COUNTY CONSTRUCTION PLANS

1. ALL DRAINAGE AND ROADWAY CONSTRUCTION SHALL MEET THE STANDARDS AND SPECIFICATIONS OF THE CITY OF COLORADO SPRINGS/EL PASO COUNTY DRAINAGE CRITERIA MANUAL, VOLUMES 1 AND 2, AND THE EL PASO COUNTY ENGINEERING CRITERIA MANUAL.

2. CONTRACTOR SHALL BE RESPONSIBLE FOR THE NOTIFICATION AND FIELD NOTIFICATION OF ALL EXISTING UTILITIES, WHETHER SHOWN ON THE PLANS OR NOT, BEFORE BEGINNING CONSTRUCTION. LOCATION OF EXISTING UTILITIES SHALL BE VERIFIED BY THE CONTRACTOR PRIOR TO CONSTRUCTION. CALL 811 TO CONTACT THE UTILITY NOTIFICATION CENTER OF COLORADO (UNCC).

3. CONTRACTOR SHALL KEEP A COPY OF THESE APPROVED PLANS, THE GRADING AND EROSION CONTROL PLAN, THE STORMWATER MANAGEMENT PLAN (SWMP), THE SOIL AND GEOTECHNICAL REPORT, AND THE APPROPRIATE DESIGN AND CONSTRUCTION STANDARDS AND SPECIFICATIONS AT THE JOB SITE AT ALL TIMES, INCLUDING THE FOLLOWING:
   - 3.1. EL PASO COUNTY ENGINEERING CRITERIA MANUAL (ECM)
   - 3.2. CITY OF COLORADO SPRINGS/ EL PASO COUNTY DRAINAGE CRITERIA MANUAL, VOLUMES 1 AND 2
   - 3.3. COLORADO DEPARTMENT OF TRANSPORTATION (CDOT) STANDARD SPECIFICATIONS AND BRIDGE CONSTRUCTION
   - 3.4. CDOT M&S STANDARDS

4. NOTWITHSTANDING ANYTHING DEPICTED IN THESE PLANS IN WORDS OR GRAPHIC REPRESENTATION, ALL DESIGN AND CONSTRUCTION RELATED TO ROADS, STORM DRAINAGE AND EROSION CONTROL SHALL CONFORM TO THE STANDARDS AND REQUIREMENTS OF THE MOST RECENT VERSIONS OF THE RELEVANT ADOPTED EL PASO COUNTY STANDARDS, INCLUDING THE LAND DEVELOPMENT CODE, THE ENGINEERING CRITERIA MANUAL, THE DRAINAGE CRITERIA MANUAL, AND THE DRAINAGE CRITERIA MANUAL VOLUME 2. ANY DEVIATIONS FROM REGULATIONS AND STANDARDS MUST BE REQUESTED, AND APPROVED, IN WRITING. ANY MODIFICATIONS NECESSARY TO MEET CRITERIA AFTER-THE-FACT WILL BE ENTIRELY THE DEVELOPER'S RESPONSIBILITY TO RECTIFY.

5. IT IS THE DESIGN ENGINEER'S RESPONSIBILITY TO ACCURATELY SHOW EXISTING CONDITIONS, BOTH ONSITE AND OFFSITE, ON THE CONSTRUCTION PLANS. ANY MODIFICATIONS NECESSARY DUE TO CONFLICTS, OMISSIONS, OR CHANGED CONDITIONS WILL BE ENTIRELY THE DEVELOPER'S RESPONSIBILITY TO RECTIFY.

6. CONTRACTOR SHALL SCHEDULE A PRE-CONSTRUCTION MEETING WITH EL PASO COUNTY PLANNING AND COMMUNITY DEVELOPMENT INSPECTIONS, PRIOR TO STARTING CONSTRUCTION.

7. IT IS THE CONTRACTOR'S RESPONSIBILITY TO UNDERSTAND THE REQUIREMENTS OF ALL JURISDICTIONAL AGENCIES TO OBTAIN ALL REQUIRED PERMITS, INCLUDING BUT NOT LIMITED TO EL PASO COUNTY EROSION AND STORMWATER QUALITY CONTROL PERMIT (ESQCP), REGIONAL BUILDING FLOODPLAIN DEVELOPMENT PERMIT, U.S. ARMY CORPS OF ENGINEERS-ISSUED 401 AND/OR 404 PERMITS, AND COUNTY AND STATE FUGITIVE DUST PERMITS.

8. CONTRACTOR SHALL NOT DEVIATE FROM THE PLANS WITHOUT FIRST OBTAINING WRITTEN APPROVAL FROM THE DESIGN ENGINEER AND EL PASO COUNTY PCD. CONTRACTOR SHALL NOTIFY THE DESIGN ENGINEER IMMEDIATELY UPON DISCOVERY OF ANY ERRORS OR INCONSISTENCIES.

9. ALL STORM DRAIN PIPE SHALL BE CLASS III RCP UNLESS OTHERWISE NOTED AND APPROVED BY PCD.

10. CONTRACTOR SHALL COORDINATE GEOTECHNICAL TESTING PER ECM STANDARDS. PAVEMENT DESIGN SHALL BE APPROVED BY EL PASO COUNTY PCD PRIOR TO PLACEMENT OF CURB AND GUTTER AND PAVEMENT.

11. ALL CONSTRUCTION TRAFFIC MUST ENTER/EXIT THE SITE AT APPROVED CONSTRUCTION ACCESS POINTS.

12. SIGHT VISIBILITY TRIANGLES IDENTIFIED IN THE PLANS, SHALL BE PROVIDED AT ALL INTERSECTIONS. OBSTRUCTIONS GREATER THAN 18 INCHES ABOVE FLOWLINE ARE NOT ALLOWED IN SIGHT TRIANGLES.

13. SIGNING AND STRIPING SHALL COMPLY WITH EL PASO COUNTY DEPARTMENT OF PUBLIC WORKS AND MUTCD CRITERIA.

14. CONTRACTOR SHALL OBTAIN ANY PERMITS REQUIRED BY EL PASO COUNTY DEPARTMENT OF PUBLIC WORKS, INCLUDING WORK WITHIN THE RIGHT-OF-WAY AND SPECIAL TRANSPORT PERMITS.

15. THE LIMITS OF CONSTRUCTION SHALL REMAIN WITHIN THE PROPERTY LINE UNLESS OTHERWISE NOTED. THE OWNER/DEVELOPER SHALL OBTAIN WRITTEN PERMISSION AND EASEMENTS, WHERE REQUIRED, FROM ADJOINING PROPERTY OWNER(S) PRIOR TO ANY OFF-SITE DISTURBANCE, GRADING, OR CONSTRUCTION.

SIGNING AND STRIPING NOTES

1. ALL SIGNS AND PAVEMENT MARKING SHALL BE IN COMPLIANCE WITH THE CURRENT MANUAL ON UNIFORM TRAFFIC CONTROL DEVICES (MUTCD).

2. REMOVAL OF EXISTING PAVEMENT MARKINGS SHALL BE ACCOMPLISHED BY A METHOD THAT DOES NOT MATERIALLY DAMAGE THE PAVEMENT. THE PAVEMENT MARKINGS SHALL BE REMOVED TO THE EXTENT THEY WILL NOT BE VISIBLE UNDER DAY OR NIGHT CONDITIONS. AT NO TIME WILL IT BE ACCEPTABLE TO PAINT OVER EXISTING PAVEMENT MARKINGS.

3. ANY DEVIATION FROM THE STRIPING AND SIGNING PLAN SHALL BE APPROVED BY EL PASO COUNTY PLANNING AND COMMUNITY DEVELOPMENT.

4. ALL SIGNS SHOWN ON THE SIGNING AND STRIPING PLAN SHALL BE NEW SIGNS. EXISTING SIGNS MAY REMAIN OR BE REUSED IF THEY MEET CURRENT EL PASO COUNTY AND MUTCD STANDARDS.

5. STREET NAME AND REGULATORY STOP SIGNS SHALL BE ON THE SAME POST AT INTERSECTIONS.

6. ALL REMOVED SIGNS SHALL BE DISPOSED OF IN A PROPER MANNER BY THE CONTRACTOR.

7. ALL STREET NAME SIGNS SHALL BE "D" SERIES LETTERS, WITH LOCAL ROADWAY SIGNS BEING 4" UPPER-LOWER CASE LETTERING ON 8" BLANK AND NON-LOCAL ROADWAY SIGNS BEING 6" LETTERING. UPPER-LOWER CASE ON 12" BLANK, WITH A WHITE BORDER THAT IS NOT RECESSED. MULTI-LANE ROADWAYS WITH SPEED LIMITS OF 40 MPH OR HIGHER SHALL HAVE 8" UPPER-LOWER CASE LETTERING ON 18" BLANK WITH A WHITE BORDER THAT IS NOT RECESSED. THE WIDTH OF THE NON-RECESSED WHITE BORDERS SHALL MATCH PAGE 255 OF THE 2012 MUTCD "STANDARD HIGHWAY SIGNS".

8. ALL TRAFFIC SIGNS SHALL HAVE A MINIMUM HIGH INTENSITY PRISMATIC GRADE SHEETING.

9. ALL LOCAL RESIDENTIAL STREET SIGNS SHALL BE MOUNTED ON A 1.75" X 1.75" SQUARE TUBE SIGN POST AND STUB POST BASE.. FOR OTHER APPLICATIONS, REFER TO THE CDOT STANDARD S-614-8 REGARDING USE OF THE P2 TUBULAR STEEL POST SLIPBASE DESIGN.

10. ALL SIGNS SHALL BE SINGLE SHEET ALUMINUM WITH 0.100" THICKNESS.

11. ALL LIMIT LINES/STOP LINES, CROSSWALK LINES, PAVEMENT LEGENDS, AND ARROWS SHALL BE A MINIMUM 125 MIL THICKNESS PREFORMED THERMOPLASTIC PAVEMENT MARKINGS WITH TAPERED LEADING EDGES PER CDOT STANDARD S-627-1. WORD AND SYMBOL MARKINGS SHALL BE THE NARROW TYPE, STOP BARS SHALL BE 24" IN WIDTH, CROSSWALK LINES SHALL BE 12" WIDE AND 8' LONG PER CDOT S-267-1.

12. ALL LONGITUDINAL LINES SHALL BE A MINIMUM 15MIL THICKNESS EPOXY PAINT. ALL NON-LOCAL RESIDENTIAL ROADWAYS SHALL INCLUDE BOTH RIGHT AND LEFT EDGE LINE STRIPING AND ANY ADDITIONAL STRIPING AS REQUIRED BY CDOT S-627-1.

13. THE CONTRACTOR SHALL NOTIFY EL PASO COUNTY PLANNING AND COMMUNITY DEVELOPMENT (719) 520-6819 PRIOR TO AND UPON COMPLETION OF THE SIGNING AND STRIPING.

14. THE CONTRACTOR SHALL OBTAIN A WORK IN THE RIGHT OF WAY PERMIT FROM THE EL PASO COUNTY DEPARTMENT OF PUBLIC WORKS (DPW) PRIOR TO ANY SIGNAGE OR STRIPING WORK WITHIN AN EXISTING EL PASO COUNTY ROADWAY.

AS-BUILTS
05/24/2023
SF-2123

EPC PCD 1/31/22

Know what's below. Call before you dig.

ENGINEER'S STATEMENT

PREPARED UNDER MY DIRECT SUPERVISION AND ON BEHALF OF JR ENGINEERING

MIKE A. BRAMLETT, P.E.
COLORADO P.E. 32314
FOR AND ON BEHALF OF JR ENGINEERING, LLC

11/11/21
DATE

UNTIL SUCH TIME AS THESE DRAWINGS ARE APPROVED BY THE APPROPRIATE REVIEWING AGENCIES, JR ENGINEERING APPROVES THEIR USE ONLY FOR THE PURPOSES DESIGNATED BY WRITTEN AUTHORIZATION.

PREPARED FOR
MONUMENT HILL CM LLC
1864 WOODMOOR DR., STE. 100
COLORADO SPRINGS, CO 80920
ATTN: JOE DESJARDIN
719-476-0800
JDESJARDIN@PROTERRACO.COM

J·R ENGINEERING
A Westrian Company
Centennial 303-740-9393 • Colorado Springs 719-593-2593
Fort Collins 970-491-9888 • www.jrengineering.com

No.	REVISION	BY	DATE

H-SCALE	N/A
V-SCALE	N/A
DATE	11/11/21
DESIGNED BY	N/A
DRAWN BY	N/A
CHECKED BY	

CLOVERLEAF FILING NO. 2

LEGEND AND GENERAL NOTES

SHEET 2 OF 20

JOB NO. 25158.01

X:\2510000.all\25158\01\Drawings\Sheet Dwgs\LG01.dwg, LG01, 11/11/2021 11:40:19 AM, CS

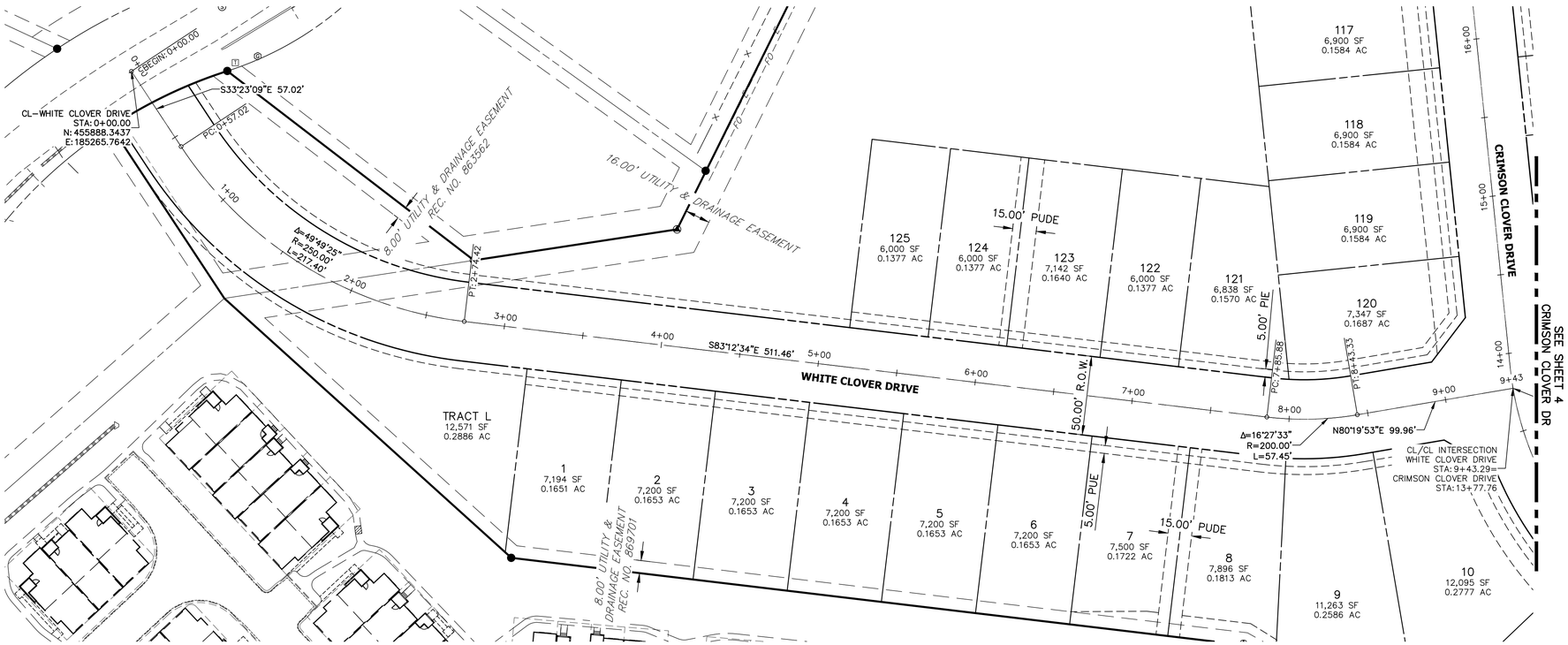

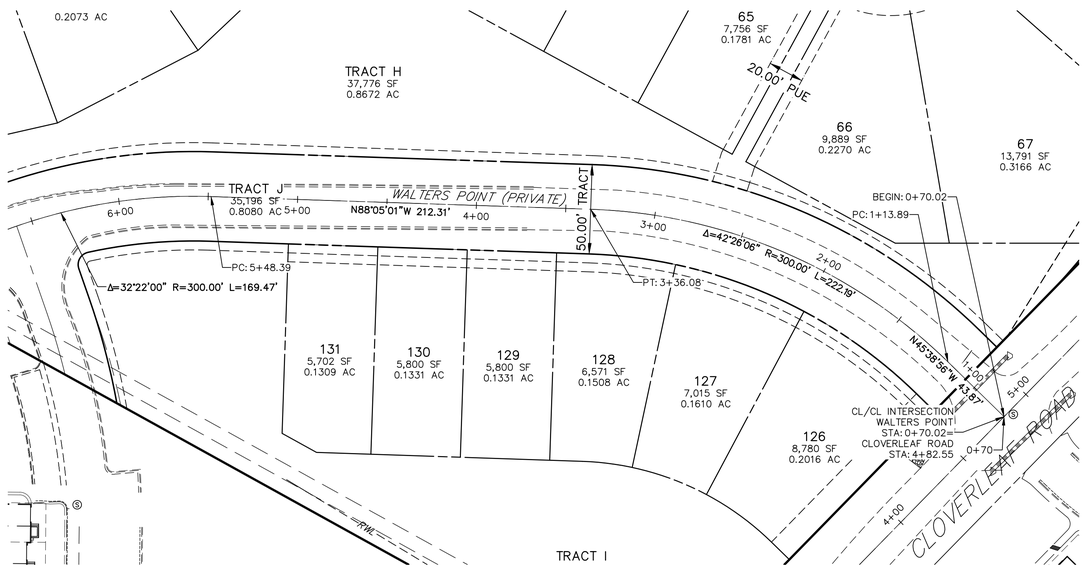

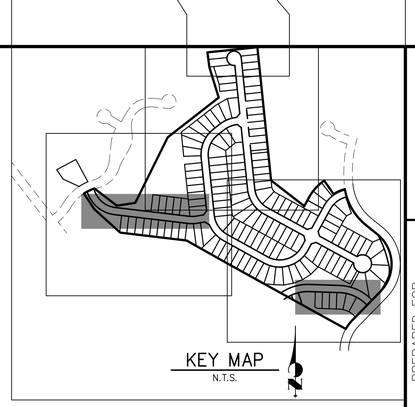

UNTIL SUCH TIME AS THESE DRAWINGS ARE APPROVED BY THE APPROPRIATE REVIEWING AGENCIES, JR ENGINEERING APPROVES THEIR USE ONLY FOR THE PURPOSES DESIGNATED BY WRITTEN AUTHORIZATION.

PREPARED FOR
MONUMENT HILL CM LLC
1864 WOODMOOR DR., STE. 100
COLORADO SPRINGS, CO 80920
ATTN: JOE DESJARDIN
719-476-0800
JDESJARDIN@PROTERRACO.COM

J·R ENGINEERING
A Westrian Company
Centennial 303-740-9393 • Colorado Springs 719-593-2593
Fort Collins 970-491-9888 • www.jrengineering.com

No.	REVISION	BY	DATE

AS-BUILTS
05/24/2023
SF-2123

H-SCALE	1"=40'
V-SCALE	N/A
DATE	11/11/21
DESIGNED BY	XXX
DRAWN BY	CRB
CHECKED BY	

ORIGINAL SCALE: 1" = 40'

Know what's below. Call before you dig.

ENGINEER'S STATEMENT

PREPARED UNDER MY DIRECT SUPERVISION AND ON BEHALF OF JR ENGINEERING

MIKE A. BRAMLETT, P.E.
COLORADO P.E. 32314
FOR AND ON BEHALF OF JR ENGINEERING, LLC

11/11/21
DATE

EPC PCD 1/31/22

CLOVERLEAF FILING NO. 2
HORIZONTAL CONTROL PLAN

SHEET 3 OF 20

JOB NO. 25158.01

X:\2510000.all\2515801\Drawings\Sheet Dwgs\HC01.dwg, HC01, 11/11/2021 11:41:01 AM, CS

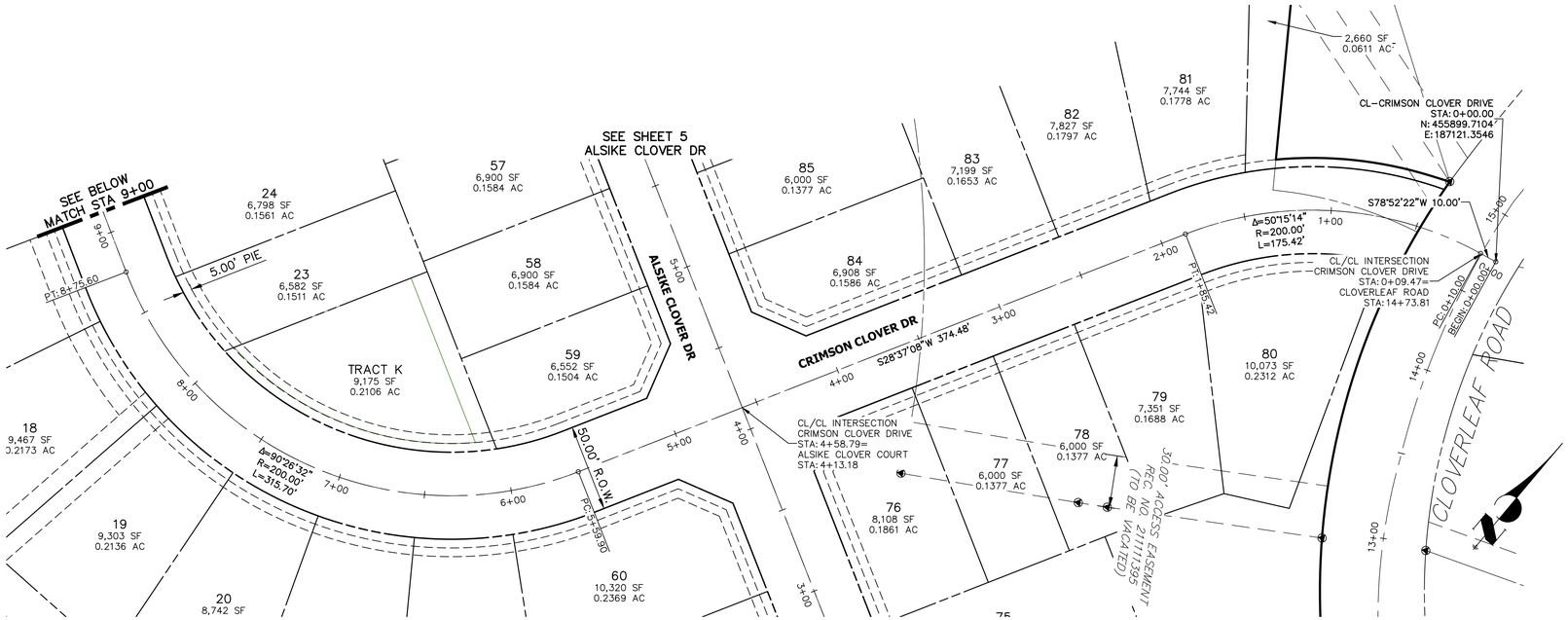

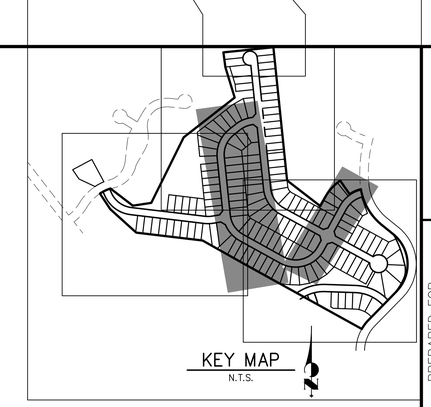

AS-BUILTS
05/24/2023
SF-2123

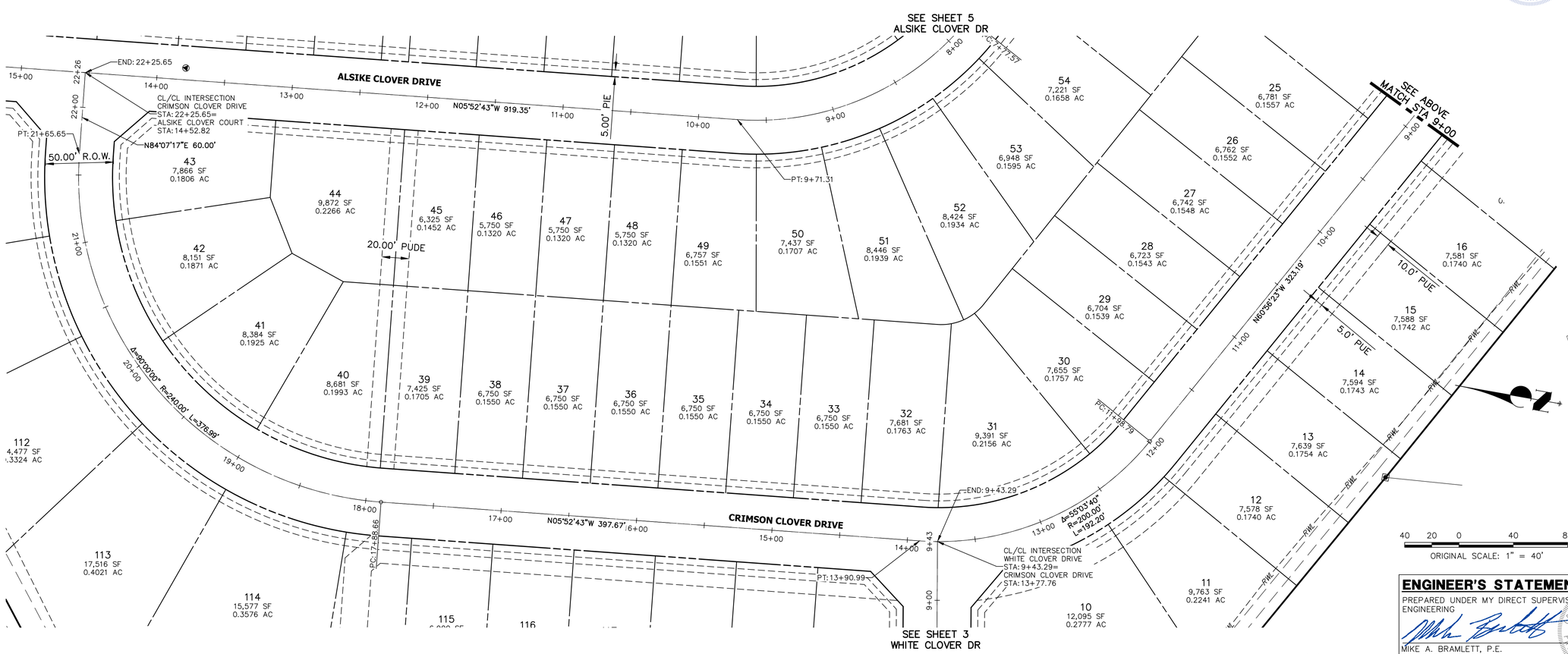

811
Know what's below.
Call before you dig.

40 20 0 40 80
ORIGINAL SCALE: 1" = 40'

EPC PCD 1/31/22

ENGINEER'S STATEMENT

PREPARED UNDER MY DIRECT SUPERVISION AND ON BEHALF OF JR ENGINEERING

11/11/21

MIKE A. BRAMLETT, P.E. — DATE
COLORADO P.E. 32314
FOR AND ON BEHALF OF JR ENGINEERING, LLC

UNTIL SUCH TIME AS THESE DRAWINGS ARE APPROVED BY THE APPROPRIATE REVIEWING AGENCIES, JR ENGINEERING APPROVES THEIR USE ONLY FOR THE PURPOSES DESIGNATED BY WRITTEN AUTHORIZATION.

PREPARED FOR
MONUMENT HILL CM LLC
1864 WOODMOOR DR., STE. 100
COLORADO SPRINGS, CO 80920
ATTN: JOE DESJARDIN
719-476-0800
JDESJARDIN@PROTERRACO.COM

J·R ENGINEERING
A Westrian Company
Centennial 303-740-9393 • Colorado Springs 719-593-2593
Fort Collins 970-491-9888 • www.jrengineering.com

No.	REVISION	BY	DATE

H-SCALE	1"=40'
V-SCALE	N/A
DATE	11/11/21
DESIGNED BY	XXX
DRAWN BY	CRB
CHECKED BY	

CLOVERLEAF FILING NO. 2

HORIZONTAL CONTROL PLAN

SHEET 4 OF 20

JOB NO. 25158.01

X:\2515\0000 all\2515801\Drawings\Sheet Dwgs\HC01.dwg, HC02, 11/11/2021 11:41:28 AM, CS

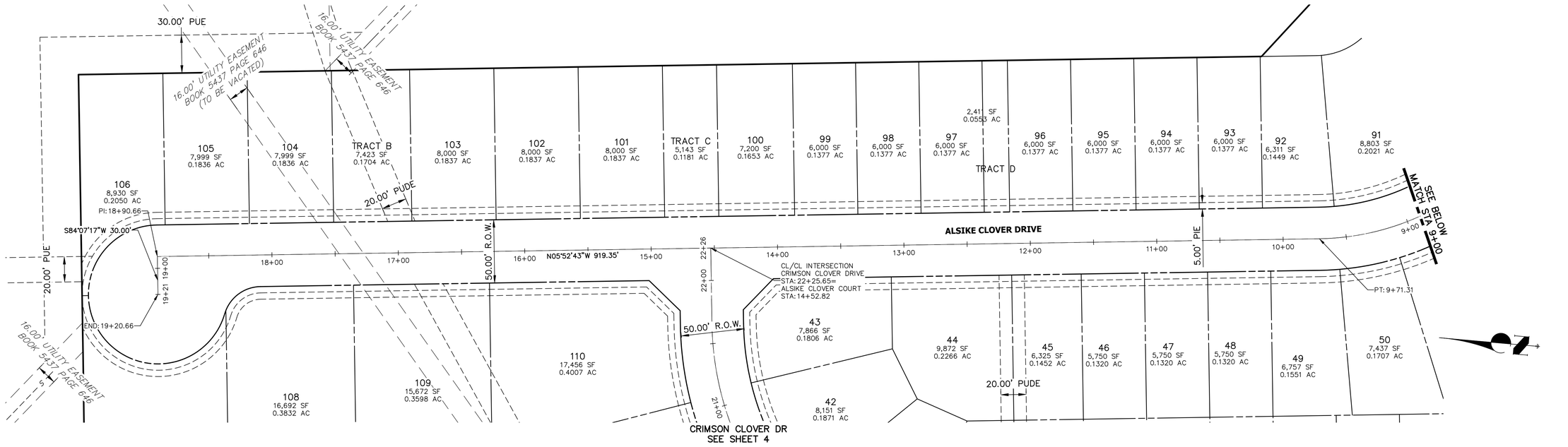

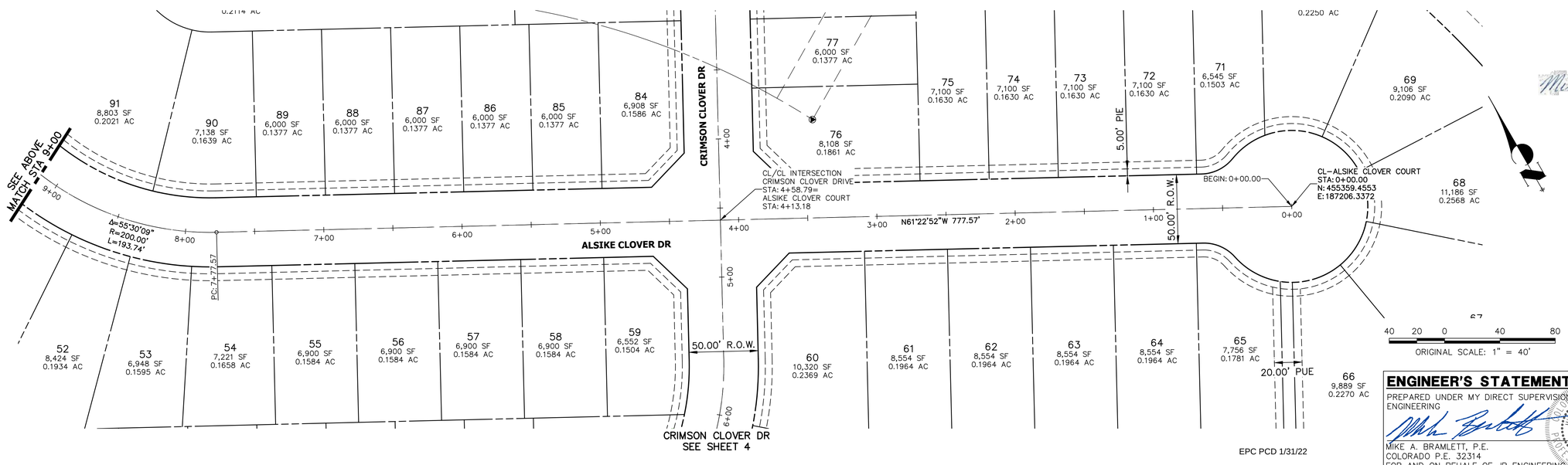

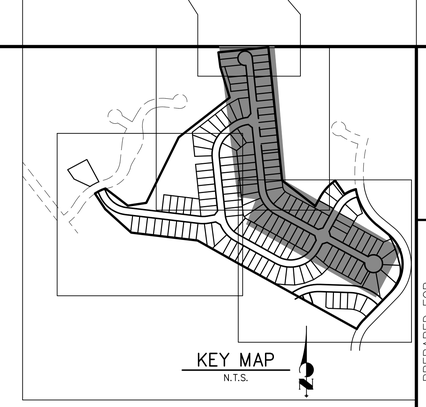

AS-BUILTS
05/24/2023
SF-2123

Mike Bramlett
MIKE A. BRAMLETT
32314
COLORADO REGISTERED PROFESSIONAL ENGINEER

811 Know what's below. Call before you dig.

EPC PCD 1/31/22

ENGINEER'S STATEMENT

PREPARED UNDER MY DIRECT SUPERVISION AND ON BEHALF OF JR ENGINEERING

MIKE A. BRAMLETT, P.E.
COLORADO P.E. 32314
FOR AND ON BEHALF OF JR ENGINEERING, LLC

11/11/21
DATE

UNTIL SUCH TIME AS THESE DRAWINGS ARE APPROVED BY THE APPROPRIATE REVIEWING AGENCIES, JR ENGINEERING APPROVES THEIR USE ONLY FOR THE PURPOSES DESIGNATED BY WRITTEN AUTHORIZATION.

PREPARED FOR
MONUMENT HILL CM LLC
1864 WOODMOOR DR., STE. 100
COLORADO SPRINGS, CO 80920
ATTN: JOE DESJARDIN
719-476-0800
JDESJARDIN@PROTERRACO.COM

J·R ENGINEERING
A Westrian Company
Centennial 303-740-9393 • Colorado Springs 719-593-2593
Fort Collins 970-491-9888 • www.jrengineering.com

No.	REVISION	BY	DATE

H-SCALE	1"=40'
V-SCALE	N/A
DATE	11/11/21
DESIGNED BY	XXX
DRAWN BY	CRB
CHECKED BY	

CLOVERLEAF FILING NO. 2
HORIZONTAL CONTROL PLAN

SHEET 5 OF 20

JOB NO. 25158.01

X:\2515000.all\2515801\Drawings\Sheet Dwgs\HC01.dwg, HC03, 11/11/2021 11:41:55 AM, CS

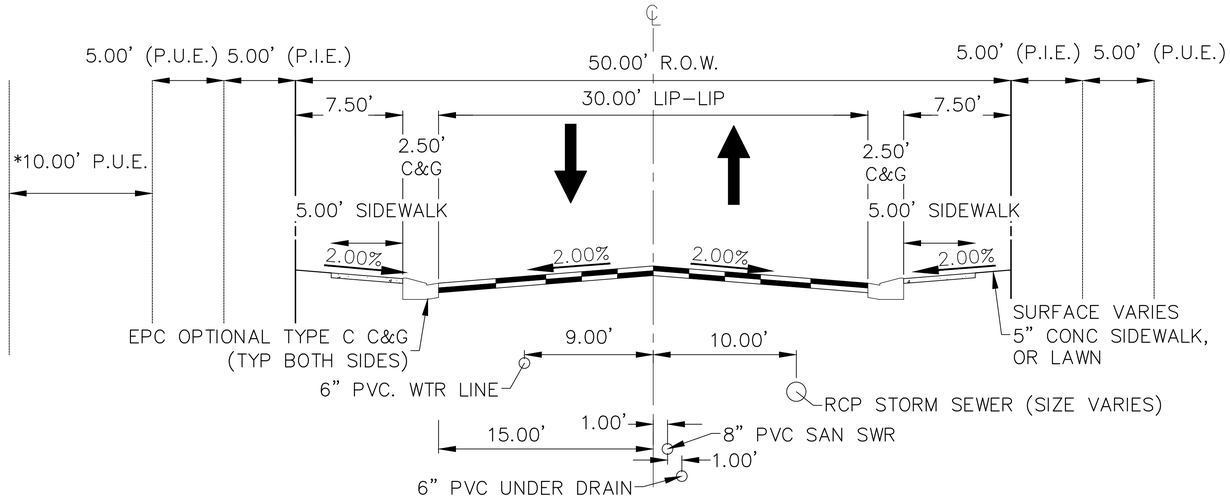

TYPICAL CROSS SECTION

N.T.S. (ALSIKE CLOVER CT, CRIMSON CLOVER DR, WHITE CLOVER DRIVE)
(PUBLIC ROAD, URBAN LOCAL, POSTED SPEED LIMIT = 25 MPH)
(*SEE PLAN VIEW FOR 10' PUE LOCATION)

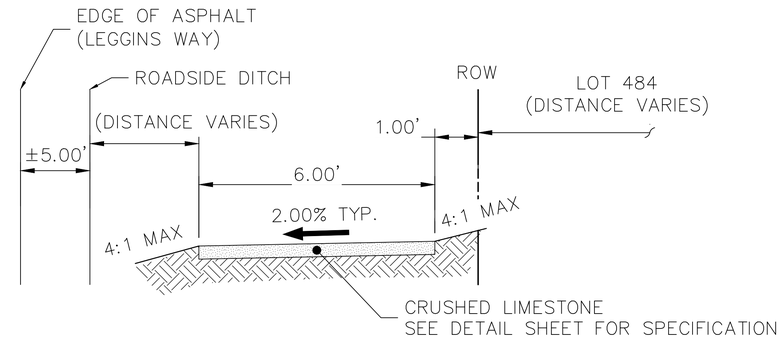

GRAVEL TRAIL TYPICAL SECTION

N.T.S. (RUNS ALONGSIDE LEGGINS WAY)

AS-BUILTS
05/24/2023
SF-2123

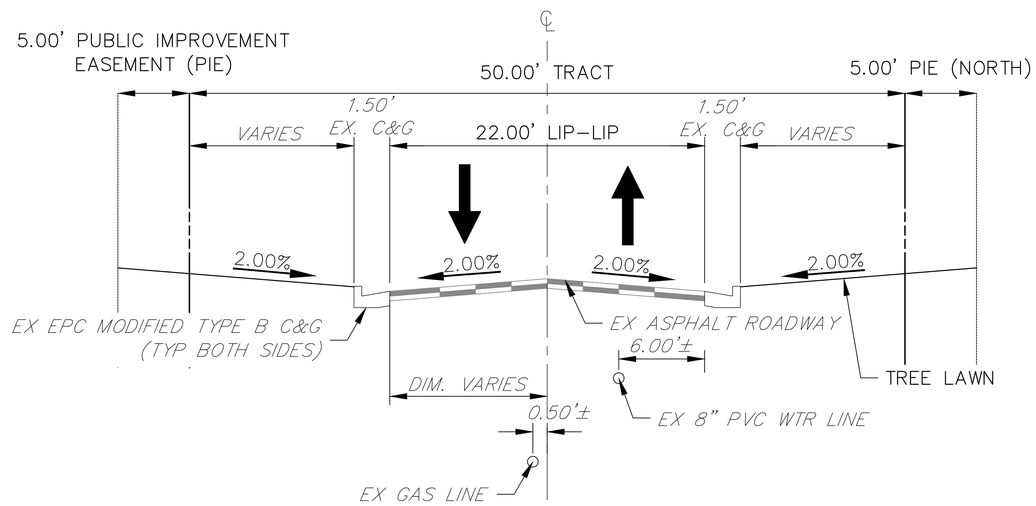

CROSS SECTION – WALTERS POINT
STA: 5+16.67±–7+32

N.T.S. (PRIVATE ROAD, POSTED SPEED LIMIT = 25 MPH)

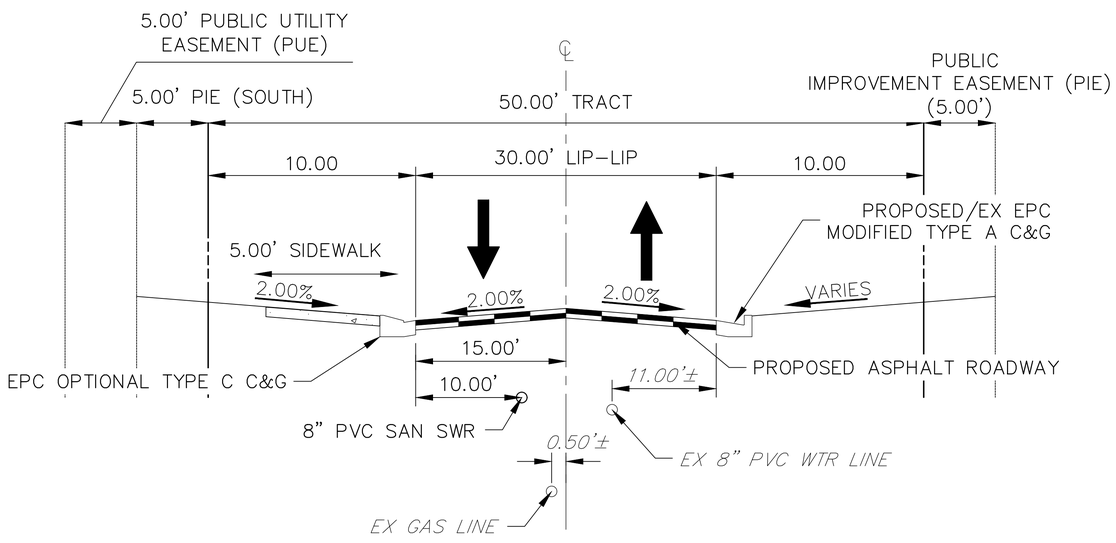

CROSS SECTION – WALTERS POINT
STA: 1+00–5+16.67±

N.T.S. (PRIVATE ROAD, POSTED SPEED LIMIT = 25 MPH)

Know what's below. Call before you dig.

ENGINEER'S STATEMENT

PREPARED UNDER MY DIRECT SUPERVISION AND ON BEHALF OF JR ENGINEERING

11/11/21

MIKE A. BRAMLETT, P.E.
COLORADO P.E. 32314
FOR AND ON BEHALF OF JR ENGINEERING, LLC

DATE

EPC PCD 1/31/22

UNTIL SUCH TIME AS THESE DRAWINGS ARE APPROVED BY THE APPROPRIATE REVIEWING AGENCIES, JR ENGINEERING APPROVES THEIR USE ONLY FOR THE PURPOSES DESIGNATED BY WRITTEN AUTHORIZATION.

PREPARED FOR
MONUMENT HILL CM LLC
1864 WOODMOOR DR., STE. 100
COLORADO SPRINGS, CO 80920
ATTN: JOE DESJARDIN
719-476-0800
JDESJARDIN@PROTERRACO.COM

J·R ENGINEERING
A Westrian Company
Centennial 303-740-9393 • Colorado Springs 719-593-2593
Fort Collins 970-491-9888 • www.jrengineering.com

No.	REVISION	BY	DATE

H-SCALE	N/A
V-SCALE	N/A
DATE	11/11/21
DESIGNED BY	N/A
DRAWN BY	N/A
CHECKED BY	

CLOVERLEAF FILING NO. 2

TYPICAL SECTIONS

SHEET 6 OF 20

JOB NO. 25158.01

X:\2510000.all\25158\01\Drawings\Sheet Dwgs\TX01.dwg, TX01, 11/11/2021 12:07:59 PM, CS

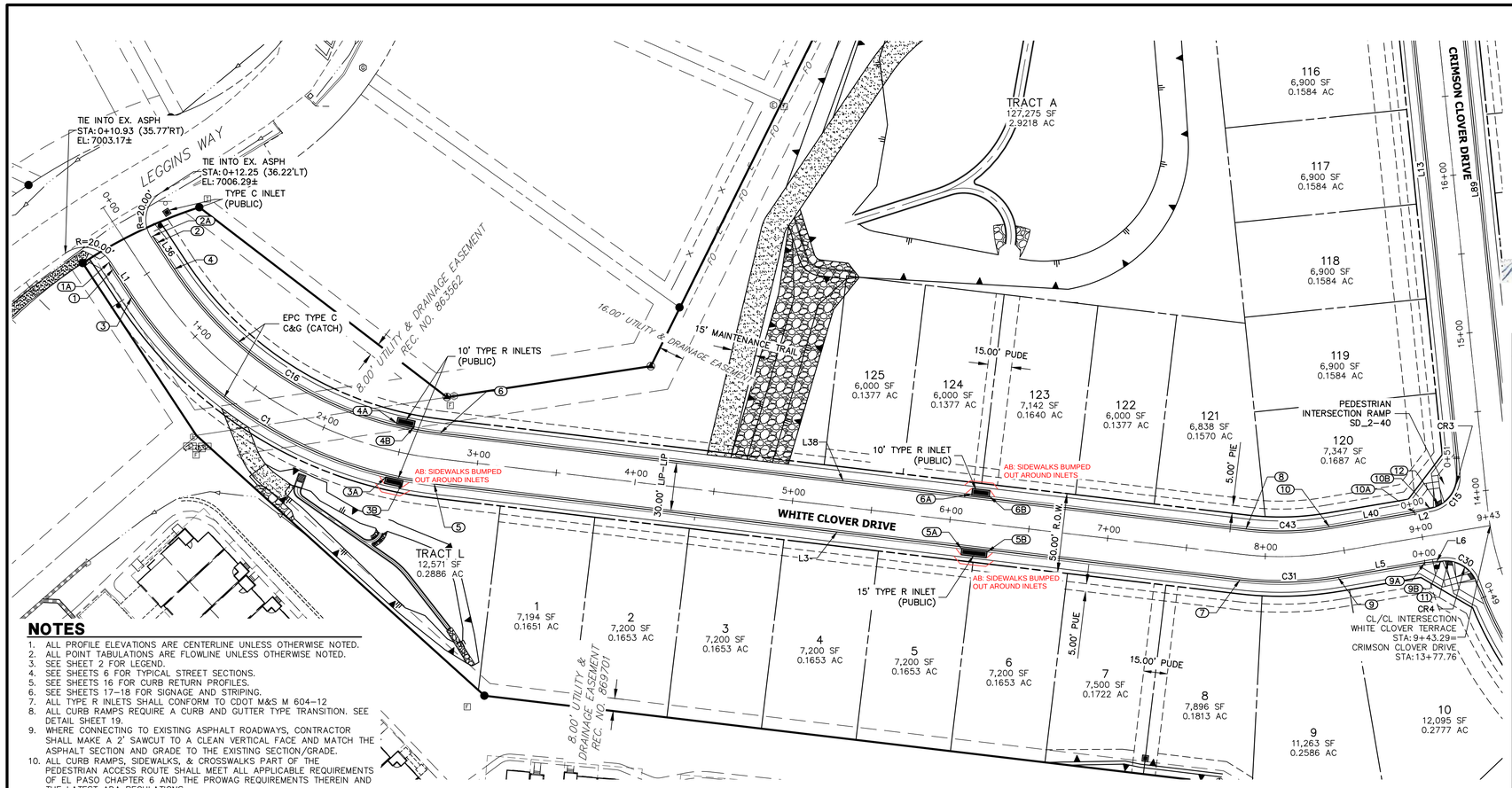

NOTES

1. ALL PROFILE ELEVATIONS ARE CENTERLINE UNLESS OTHERWISE NOTED.
2. ALL POINT TABULATIONS ARE FLOWLINE UNLESS OTHERWISE NOTED.
3. SEE SHEET 2 FOR LEGEND.
4. SEE SHEETS 6 FOR TYPICAL STREET SECTIONS.
5. SEE SHEETS 16 FOR CURB RETURN PROFILES.
6. SEE SHEETS 17–18 FOR SIGNAGE AND STRIPING.
7. ALL TYPE R INLETS SHALL CONFORM TO CDOT M&S M 604–12
8. ALL CURB RAMPS REQUIRE A CURB AND GUTTER TYPE TRANSITION. SEE DETAIL SHEET 19.
9. WHERE CONNECTING TO EXISTING ASPHALT ROADWAYS, CONTRACTOR SHALL MAKE A 2' SAWCUT TO A CLEAN VERTICAL FACE AND MATCH THE ASPHALT SECTION AND GRADE TO THE EXISTING SECTION/GRADE.
10. ALL CURB RAMPS, SIDEWALKS, & CROSSWALKS PART OF THE PEDESTRIAN ACCESS ROUTE SHALL MEET ALL APPLICABLE REQUIREMENTS OF EL PASO CHAPTER 6 AND THE PROWAG REQUIREMENTS THEREIN AND THE LATEST ADA REGULATIONS

AS-BUILTS
05/24/2023
SF-2123

Mike Bramlett
32314

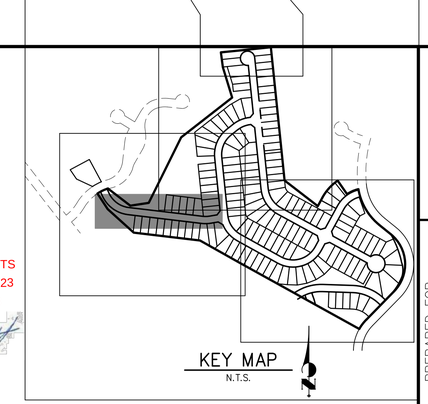

UNTIL SUCH TIME AS THESE DRAWINGS ARE APPROVED BY THE APPROPRIATE REVIEWING AGENCIES, JR ENGINEERING APPROVES THEIR USE ONLY FOR THE PURPOSES DESIGNATED BY WRITTEN AUTHORIZATION.

PREPARED FOR
MONUMENT HILL CM LLC
1864 WOODMOOR DR., STE. 100
COLORADO SPRINGS, CO 80920
ATTN: JOE DESJARDIN
719-476-0800
JDESJARDIN@PROTERRACO.COM

J·R ENGINEERING
A Westrian Company
Centennial 303-740-9393 • Colorado Springs 719-593-2593
Fort Collins 970-491-9888 • www.jrengineering.com

ROADWAY POINT TABLULATION

POINT NUMBER	STATION	OFFSET	ALIGNMENT	ELEVATION	NOTES	DESCRIPTION
1	0+35.92	16.17' (RT)	WHITE CLOVER TERRACE	7004.69		BEGIN TYPE C C&G
1A	0+30.92	16.17' (RT)	WHITE CLOVER TERRACE	7004.59		BEGIN 0" C&G
2	0+37.21	16.17' (LT)	WHITE CLOVER TERRACE	7004.72		BEGIN TYPE C C&G
2A	0+32.21	16.17' (LT)	WHITE CLOVER TERRACE	7004.70		BEGIN 0" C&G
3	0+57.02	16.17' (RT)	WHITE CLOVER TERRACE	7005.11		PC
3A	2+45.41	17.50' (RT)	WHITE CLOVER TERRACE	7014.15		INLET SIDE TBC
3B	2+56.00	17.50' (RT)	WHITE CLOVER TERRACE	7014.72		INLET SIDE TBC
4	0+57.02	16.17' (LT)	WHITE CLOVER TERRACE	7005.11		PC
4A	2+44.12	17.50' (LT)	WHITE CLOVER TERRACE	7014.06		INLET SIDE TBC
4B	2+56.30	17.50' (LT)	WHITE CLOVER TERRACE	7014.72		INLET SIDE TBC
5	2+74.42	16.17' (RT)	WHITE CLOVER TERRACE	7015.22		PT
5A	6+09.31	17.50' (RT)	WHITE CLOVER TERRACE	7033.87		INLET SIDE TBC
5B	6+25.64	17.50' (RT)	WHITE CLOVER TERRACE	7034.76		INLET SIDE TBC
6	2+74.42	16.17' (LT)	WHITE CLOVER TERRACE	7015.22		PT
6A	6+11.57	17.50' (LT)	WHITE CLOVER TERRACE	7033.99		INLET SIDE TBC
6B	6+22.90	17.50' (LT)	WHITE CLOVER TERRACE	7034.61		INLET SIDE TBC
7	7+85.88	16.17' (RT)	WHITE CLOVER TERRACE	7042.94		PC
8	7+85.88	16.17' (LT)	WHITE CLOVER TERRACE	7042.94		PC
9	8+43.33	16.17' (RT)	WHITE CLOVER TERRACE	7045.51		PT
9A	8+98.77	16.17' (RT)	WHITE CLOVER TERRACE	7046.71		C&G TRANSITION
9B	9+08.77	17.00' (RT)	WHITE CLOVER TERRACE	7047.01		PCR
10	8+43.33	16.17' (LT)	WHITE CLOVER TERRACE	7045.51		PT
10A	8+97.76	16.17' (LT)	WHITE CLOVER TERRACE	7046.69		C&G TRANSITION
10B	9+07.76	17.00' (LT)	WHITE CLOVER TERRACE	7046.89		PCR
11	9+13.66	17.59' (RT)	WHITE CLOVER TERRACE	7047.14		RAMP MID PT
12	9+13.61	17.85' (LT)	WHITE CLOVER TERRACE	7047.01		RAMP MID PT

WHITE CLOVER TERRACE PROFILE
STA 0+00.00 TO 9+43.29

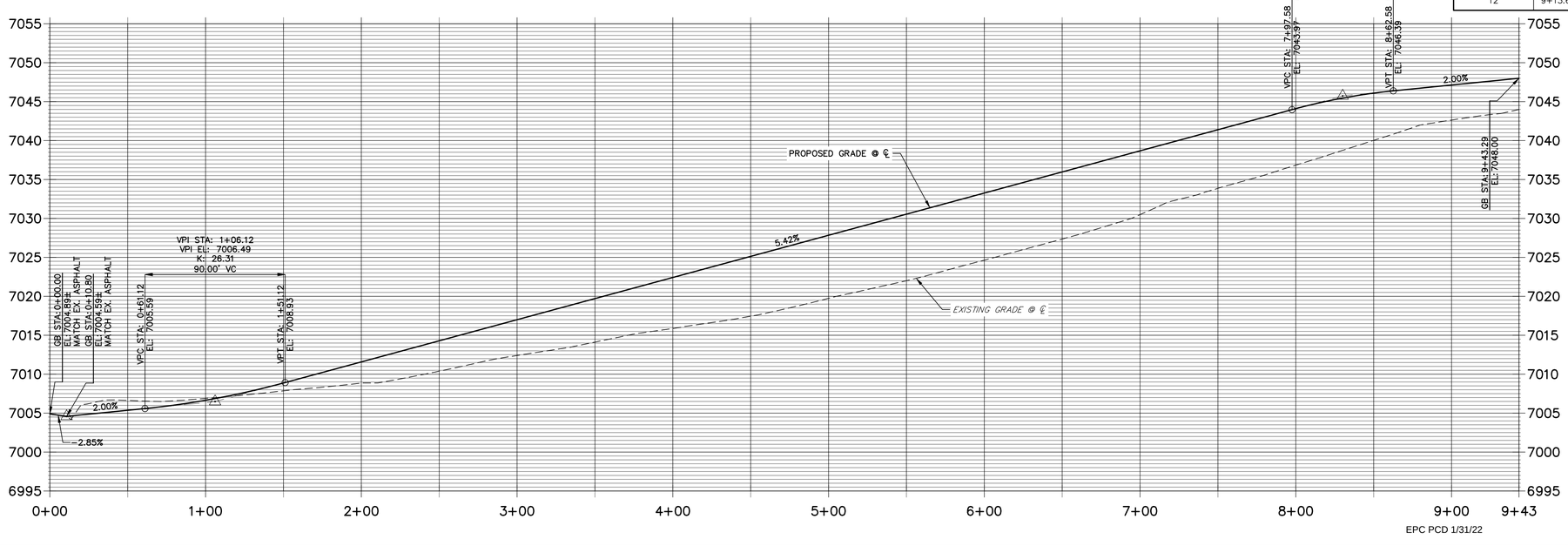

EPC PCD 1/31/22

CURVE TABLE

CURVE	DELTA	RADIUS	LENGTH
C1	49°49'25"	266.17'	231.46'
C15	86°12'36"	20.50'	30.85'
C16	49°49'25"	233.83'	203.34'
C30	80°54'56"	20.50'	28.95'
C31	16°27'33"	216.17'	62.10'
C43	16°27'33"	183.83'	52.81'

LINE TABLE

LINE	BEARING	DISTANCE
L1	S33°23'09"E	26.11'
L2	N75°34'04"E	10.03'
L3	S83°12'34"E	511.46'
L5	N80°19'53"E	55.44'
L8	S24°49'55"E	10.05'
L10	S60°56'23"E	323.19'
L36	S33°23'09"E	24.81'
L38	S83°12'34"E	511.46'
L40	N80°19'53"E	54.42'

40 20 0 40 80

HORIZONTAL
ORIGINAL SCALE: 1" = 40'
VERTICAL
ORIGINAL SCALE: 1" = 8'

811
Know what's below.
Call before you dig.

ENGINEER'S STATEMENT

PREPARED UNDER MY DIRECT SUPERVISION AND ON BEHALF OF JR ENGINEERING

11/11/21
DATE

MIKE A. BRAMLETT, P.E.
COLORADO P.E. 32314
FOR AND ON BEHALF OF JR ENGINEERING, LLC

No.	REVISION	BY	DATE

H-SCALE	1" = 40'
V-SCALE	1" = 8'
DATE	11/11/21
DESIGNED BY	XXX
DRAWN BY	CRB
CHECKED BY	

CLOVERLEAF FILING NO. 2

ROADWAY PLAN AND PROFILE

SHEET 7 OF 20

JOB NO. 25158.01

X:\2510000.all\2519801\Drawings\Sheet Dwgs\SI01.dwg, SI01, 11/11/2021 11:44:19 AM, CS

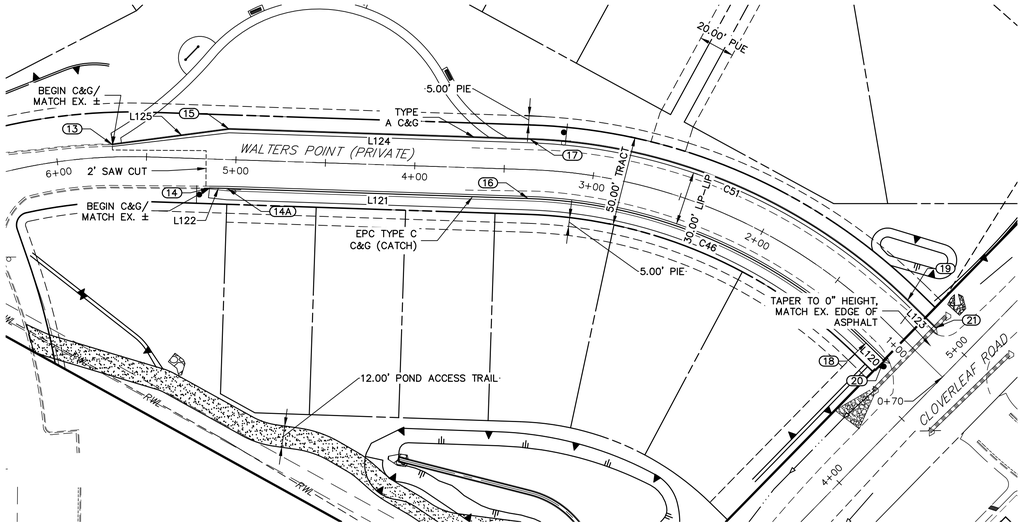

LINE TABLE		
LINE	BEARING	DISTANCE
L120	N45°38'56"W	13.86'
L121	N88°05'01"W	168.19'
L122	N88°28'28"W	9.99'
L123	N45°38'56"W	21.86'
L124	N88°05'01"W	168.25'
L125	S82°26'57"W	65.83'

CURVE TABLE			
CURVE	DELTA	RADIUS	LENGTH
C46	42°26'06"	283.83'	210.22'
C51	42°26'06"	317.00'	234.78'

ROADWAY POINT TABLULATION						
POINT NUMBER	STATION	OFFSET	ALIGNMENT	ELEVATION	NOTES	DESCRIPTION
13	5+68.82	6.88' (RT)	WALTERS POINT	7062.40		BEGIN C&G
14A	5+04.26	16.17' (LT)	WALTERS POINT	7067.96		PI
14	5+14.26	16.23' (LT)	WALTERS POINT	7067.31		BEGIN C&G
15	5+04.33	17.00' (RT)	WALTERS POINT	7067.88		PI
16	3+36.08	16.17' (LT)	WALTERS POINT	7074.59		PC
17	3+36.08	17.00' (RT)	WALTERS POINT	7074.51		PC
18	1+13.89	16.17' (LT)	WALTERS POINT	7063.39		PT
19	1+13.89	17.00' (RT)	WALTERS POINT	7064.38		PT
20	1+00.03	16.17' (LT)	WALTERS POINT	7062.65		END C&G
21	0+92.03	17.00' (RT)	WALTERS POINT	7064.08		END C&G

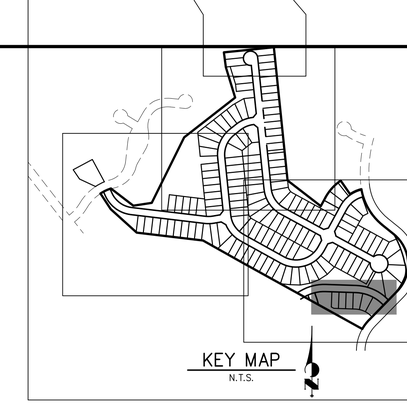

NOTES

1. ALL PROFILE ELEVATIONS ARE CENTERLINE UNLESS OTHERWISE NOTED.
2. ALL POINT TABULATIONS ARE FLOWLINE UNLESS OTHERWISE NOTED.
3. SEE SHEET 2 FOR LEGEND.
4. SEE SHEETS 6 FOR TYPICAL STREET SECTIONS.
5. SEE SHEETS 16 FOR CURB RETURN PROFILES.
6. SEE SHEETS 17–18 FOR SIGNAGE AND STRIPING.
7. ALL TYPE R INLETS SHALL CONFORM TO CDOT M&S M 604–12
8. ALL CURB RAMPS REQUIRE A CURB AND GUTTER TYPE TRANSITION. SEE DETAIL SHEET 19.
9. WHERE CONNECTING TO EXISTING ASPHALT ROADWAYS, CONTRACTOR SHALL MAKE A 2' SAWCUT TO A CLEAN VERTICAL FACE AND MATCH THE ASPHALT SECTION AND GRADE TO THE EXISTING SECTION/GRADE.
10. ALL CURB RAMPS, SIDEWALKS, & CROSSWALKS PART OF THE PEDESTRIAN ACCESS ROUTE SHALL MEET ALL APPLICABLE REQUIREMENTS OF EL PASO CHAPTER 6 AND THE PROWAG REQUIREMENTS THEREIN AND THE LATEST ADA REGULATIONS

WALTERS POINT PROFILE
STA 1+00.00 TO 6+00.00

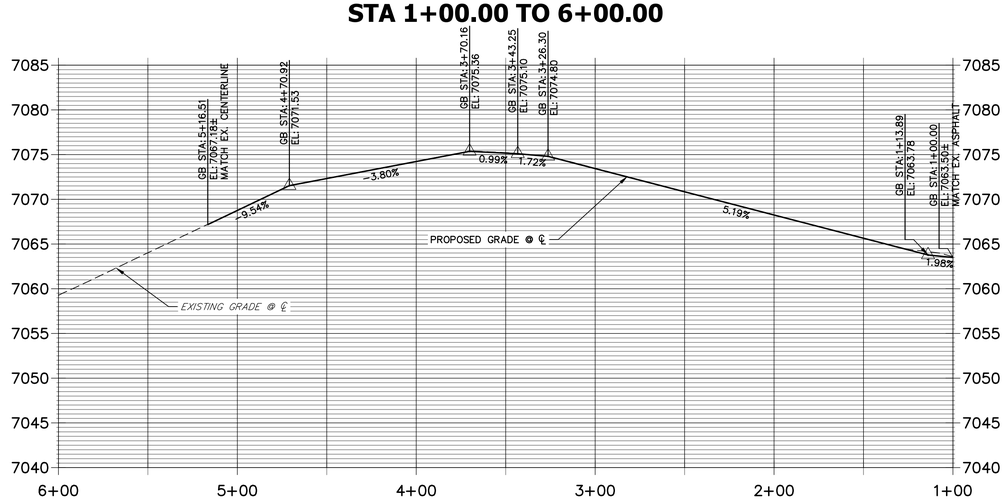

AS-BUILTS
05/24/2023
SF-2123

Mike Bramlett
32314
PROFESSIONAL ENGINEER

40 20 0 40 80
HORIZONTAL
ORIGINAL SCALE: 1" = 40'
VERTICAL
ORIGINAL SCALE: 1" = 8'

811
Know what's below.
Call before you dig.

EPC PCD 1/31/22

ENGINEER'S STATEMENT

PREPARED UNDER MY DIRECT SUPERVISION AND ON BEHALF OF JR ENGINEERING

11/11/21

MIKE A. BRAMLETT, P.E. DATE
COLORADO P.E. 32314
FOR AND ON BEHALF OF JR ENGINEERING, LLC

UNTIL SUCH TIME AS THESE DRAWINGS ARE APPROVED BY THE APPROPRIATE REVIEWING AGENCIES, JR ENGINEERING APPROVES THEIR USE ONLY FOR THE PURPOSES DESIGNATED BY WRITTEN AUTHORIZATION.

PREPARED FOR
MONUMENT HILL CM LLC
1864 WOODMOOR DR., STE. 100
COLORADO SPRINGS, CO 80920
ATTN: JOE DESJARDIN
719-476-0800
JDESJARDIN@PROTERRACO.COM

J·R ENGINEERING
A Westrian Company
Centennial 303-740-9393 • Colorado Springs 719-593-2593
Fort Collins 970-491-9888 • www.jrengineering.com

No.	REVISION	BY	DATE

H-SCALE	1"=40'
V-SCALE	1"=8'
DATE	11/11/21
DESIGNED BY	XXX
DRAWN BY	CRB
CHECKED BY	

CLOVERLEAF FILING NO. 2

ROADWAY PLAN AND PROFILE

SHEET 8 OF 20

JOB NO. 25158.01

X:\2510000.all\2515801\Drawings\Sheet Dwgs\SR01.dwg, SR02, 11/11/2021 11:44:58 AM, CS

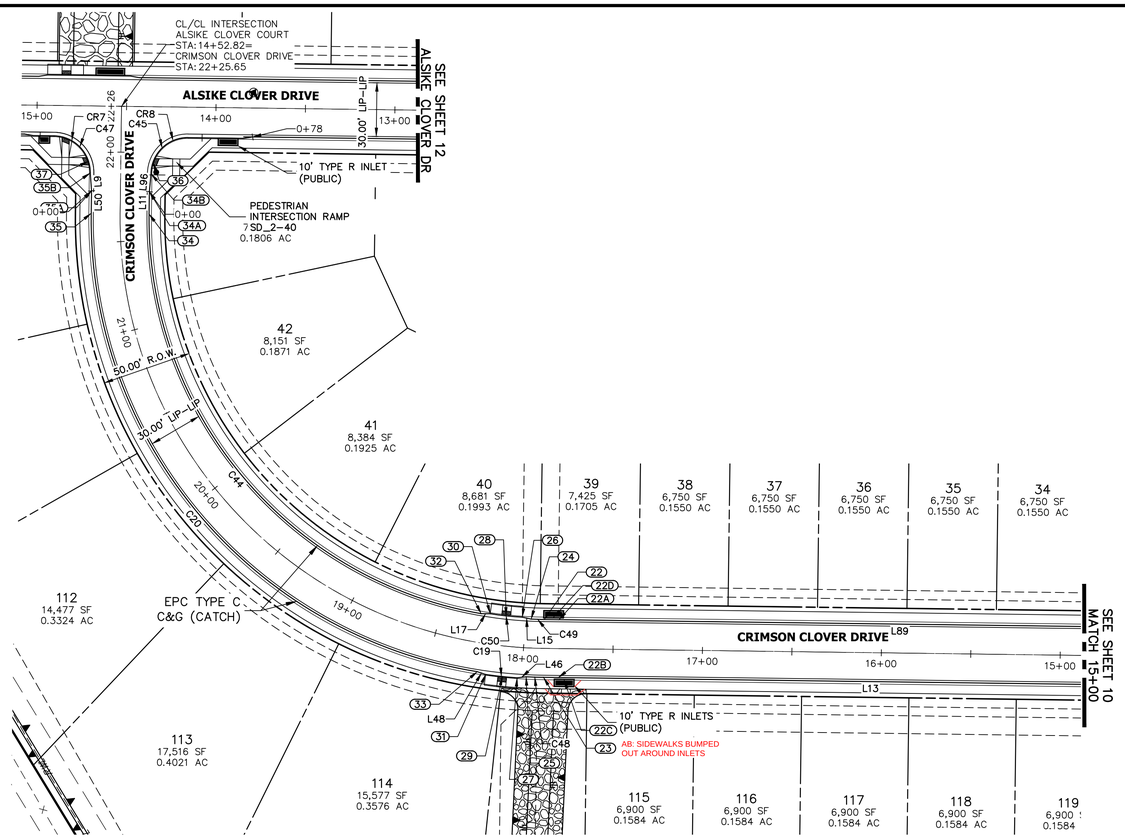

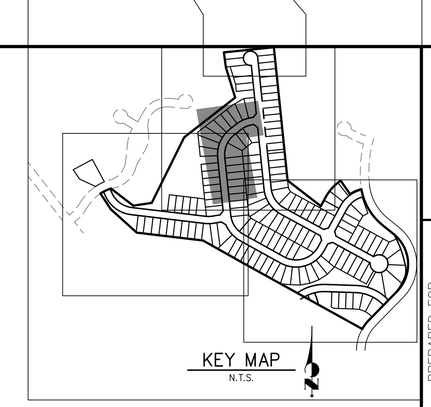

LINE TABLE		
LINE	BEARING	DISTANCE
L9	N79°21'28"E	10.03'
L11	N84°06'22"E	12.50'
L13	N05°52'43"W	365.82'
L15	N05°31'21"E	5.06'
L17	N06°15'26"W	4.98'
L46	N13°03'28"W	5.10'
L48	N11°51'54"E	4.92'
L50	N84°08'12"E	12.50'
L54	N03°35'02"E	5.07'
L55	N05°52'43"W	289.77'
L70	S05°52'41"E	18.35'
L89	N05°52'41"W	397.67'
L96	N88°53'06"E	10.03'
L99	S15°20'27"E	5.07'

CURVE TABLE			
CURVE	DELTA	RADIUS	LENGTH
C19	4°40'36"	217.00'	17.71'
C20	81°40'19"	256.22'	365.22'
C44	80°55'33"	223.83'	316.14'
C45	90°00'00"	20.50'	32.20'
C47	90°00'00"	20.50'	32.20'
C48	2°14'30"	247.14'	9.67'
C49	1°45'58"	237.26'	7.31'
C50	5°29'48"	189.10'	18.14'

ROADWAY POINT TABLULATION						
POINT NUMBER	STATION	OFFSET	ALIGNMENT	ELEVATION	NOTES	DESCRIPTION
22B	17+80.38	16.17' (LT)	CRIMSON CLOVER DRIVE	7043.26		LP
22A	17+80.38	16.17' (RT)	CRIMSON CLOVER DRIVE	7043.26		LP
22	17+88.66	16.17' (RT)	CRIMSON CLOVER DRIVE	7043.28		PC
23	17+88.66	16.17' (LT)	CRIMSON CLOVER DRIVE	7043.28		PC
24	17+96.50	16.17' (RT)	CRIMSON CLOVER DRIVE	7043.32		C&G TRANSITION
25	17+97.72	16.17' (LT)	CRIMSON CLOVER DRIVE	7043.33		C&G TRANSITION
26	18+01.89	16.95' (RT)	CRIMSON CLOVER DRIVE	7043.38		RAMP PT
27	18+02.42	17.05' (LT)	CRIMSON CLOVER DRIVE	7043.38		RAMP PT
28	18+11.60	16.91' (RT)	CRIMSON CLOVER DRIVE	7043.55		RAMP MID PT
29	18+10.18	17.07' (LT)	CRIMSON CLOVER DRIVE	7043.47		RAMP MID PT
30	18+21.31	16.94' (RT)	CRIMSON CLOVER DRIVE	7043.62		RAMP PT
31	18+18.96	17.04' (LT)	CRIMSON CLOVER DRIVE	7043.57		RAMP PT
32	18+26.67	16.17' (RT)	CRIMSON CLOVER DRIVE	7043.68		C&G TRANSITION
33	18+23.49	16.19' (LT)	CRIMSON CLOVER DRIVE	7043.62		C&G TRANSITION
34B	21+88.15	17.00' (RT)	CRIMSON CLOVER DRIVE	7063.23		PCR
34A	21+78.15	16.17' (RT)	CRIMSON CLOVER DRIVE	7062.90		C&G TRANSITION
34	21+65.65	16.17' (RT)	CRIMSON CLOVER DRIVE	7062.40		PT
35A	21+78.15	16.17' (LT)	CRIMSON CLOVER DRIVE	7062.90		C&G TRANSITION
35B	21+88.15	17.00' (LT)	CRIMSON CLOVER DRIVE	7063.23		PCR
35	21+65.65	16.17' (LT)	CRIMSON CLOVER DRIVE	7062.40		PT
36	21+94.65	18.06' (RT)	CRIMSON CLOVER DRIVE	7063.41		RAMP MID PT
37	21+94.65	18.06' (LT)	CRIMSON CLOVER DRIVE	7063.37		RAMP MID PT

CRIMSON CLOVER DRIVE PROFILE 1
STA 15+00.00 TO 22+50.00

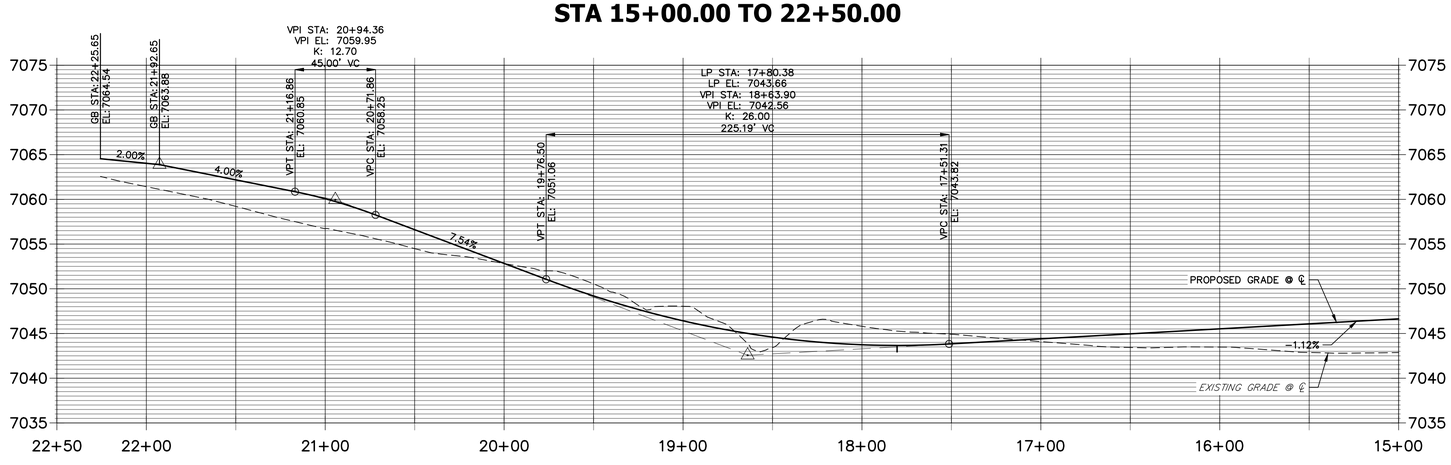

AS-BUILTS
05/24/2023
SF-2123

NOTES

1. ALL PROFILE ELEVATIONS ARE CENTERLINE UNLESS OTHERWISE NOTED.
2. ALL POINT TABULATIONS ARE FLOWLINE UNLESS OTHERWISE NOTED.
3. SEE SHEET 2 FOR LEGEND.
4. SEE SHEETS 6 FOR TYPICAL STREET SECTIONS.
5. SEE SHEETS 16 FOR CURB RETURN PROFILES.
6. SEE SHEETS 17–18 FOR SIGNAGE AND STRIPING.
7. ALL TYPE R INLETS SHALL CONFORM TO CDOT M&S M 604–12
8. ALL CURB RAMPS REQUIRE A CURB AND GUTTER TYPE TRANSITION. SEE DETAIL SHEET 19.
9. WHERE CONNECTING TO EXISTING ASPHALT ROADWAYS, CONTRACTOR SHALL MAKE A 2' SAWCUT TO A CLEAN VERTICAL FACE AND MATCH THE ASPHALT SECTION AND GRADE TO THE EXISTING SECTION/GRADE.
10. ALL CURB RAMPS, SIDEWALKS, & CROSSWALKS PART OF THE PEDESTRIAN ACCESS ROUTE SHALL MEET ALL APPLICABLE REQUIREMENTS OF EL PASO CHAPTER 6 AND THE PROWAG REQUIREMENTS THEREIN AND THE LATEST ADA REGULATIONS

EPC PCD 1/31/22

40 20 0 40 80

HORIZONTAL
ORIGINAL SCALE: 1" = 40'
VERTICAL
ORIGINAL SCALE: 1" = 8'

Know what's below. Call before you dig.

ENGINEER'S STATEMENT

PREPARED UNDER MY DIRECT SUPERVISION AND ON BEHALF OF JR ENGINEERING

MIKE A. BRAMLETT, P.E.
COLORADO P.E. 32314
FOR AND ON BEHALF OF JR ENGINEERING, LLC

11/11/21
DATE

UNTIL SUCH TIME AS THESE DRAWINGS ARE APPROVED BY THE APPROPRIATE REVIEWING AGENCIES, JR ENGINEERING APPROVES THEIR USE ONLY FOR THE PURPOSES DESIGNATED BY WRITTEN AUTHORIZATION.

PREPARED FOR
MONUMENT HILL CM LLC
1864 WOODMOOR DR., STE. 100
COLORADO SPRINGS, CO 80920
ATTN: JOE DESJARDIN
719-476-0800
JDESJARDIN@PROTERRACO.COM

J·R ENGINEERING
A Westrian Company
Centennial 303-740-9393 • Colorado Springs 719-593-2593
Fort Collins 970-491-9888 • www.jrengineering.com

No.	REVISION	BY	DATE

H-SCALE	1"=40'
V-SCALE	1"=8'
DATE	11/11/21
DESIGNED BY	XXX
DRAWN BY	CRB
CHECKED BY	

CLOVERLEAF FILING NO. 2

ROADWAY PLAN AND PROFILE

SHEET 9 OF 20

JOB NO. 25158.01

X:\2510000.all\2515801\Drawings\Sheet Dwgs\SI01.dwg, SI03, 11/11/2021 11:45:36 AM, CS

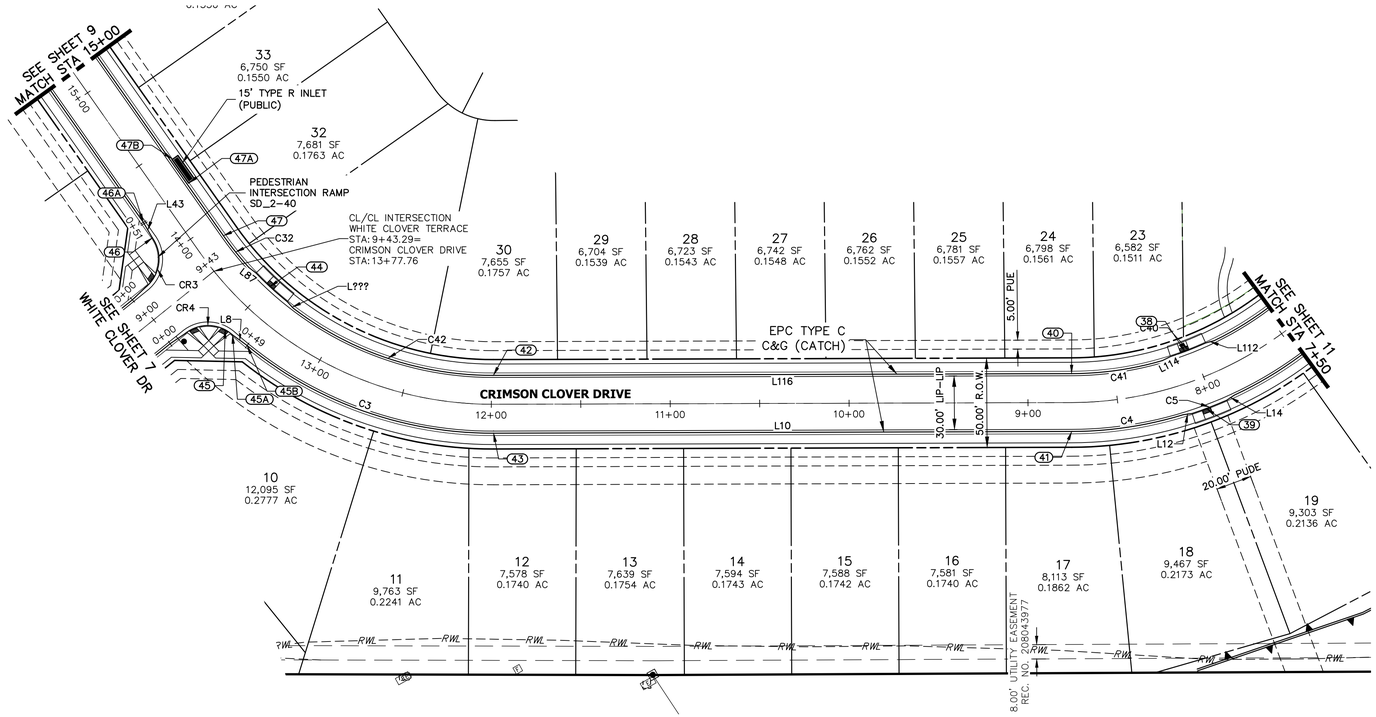

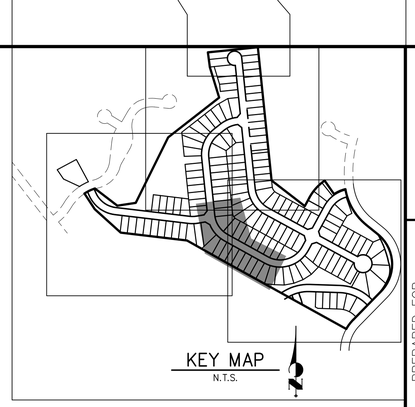

LINE TABLE		
LINE	BEARING	DISTANCE
L8	S24°49'55"E	10.05'
L10	S60°56'23"E	323.19'
L12	S68°52'04"E	5.06'
L14	N85°23'23"E	5.06'
L16	N28°37'08"E	53.45'
L43	N01°06'54"W	10.03'
L87	N23°14'32"W	5.06'
L112	N76°27'34"W	5.08'
L114	N87°10'53"W	5.08'
L116	N60°56'23"W	323.20'

CURVE TABLE			
CURVE	DELTA	RADIUS	LENGTH
C3	39°32'13"	216.17'	149.17'
C4	16°12'24"	223.40'	63.19'
C5	5°27'47"	217.00'	20.69'
C6	65°35'25"	216.17'	247.46'
C32	7°06'09"	183.83'	22.79'
C40	6°35'35"	183.00'	21.06'
C41	15°21'13"	191.82'	51.40'
C42	37°24'52"	183.83'	120.04'

ROADWAY POINT TABLULATION						
POINT NUMBER	STATION	OFFSET	ALIGNMENT	ELEVATION	NOTES	DESCRIPTION
38	8+04.85	17.00' (RT)	CRIMSON CLOVER DRIVE	7062.88		RAMP MID PT
39	8+04.85	17.00' (LT)	CRIMSON CLOVER DRIVE	7062.88		RAMP MID PT
40	8+75.60	16.17' (RT)	CRIMSON CLOVER DRIVE	7060.60		PT
41	8+75.60	16.17' (LT)	CRIMSON CLOVER DRIVE	7060.60		PT
42	11+98.79	16.17' (RT)	CRIMSON CLOVER DRIVE	7052.11		PC
43	11+98.78	16.17' (LT)	CRIMSON CLOVER DRIVE	7052.11		PC
44	13+48.87	17.00' (RT)	CRIMSON CLOVER DRIVE	7048.15		RAMP MID PT
45	13+50.64	17.67' (LT)	CRIMSON CLOVER DRIVE	7047.85		RAMP MID PT
45A	13+46.05	17.00' (LT)	CRIMSON CLOVER DRIVE	7048.09		PCR
45B	13+36.80	16.17' (LT)	CRIMSON CLOVER DRIVE	7048.49		C&G TRANSITION
46	14+12.84	17.00' (LT)	CRIMSON CLOVER DRIVE	7047.18		PCR
46A	14+22.84	16.17' (LT)	CRIMSON CLOVER DRIVE	7047.06		C&G TRANSITION
47	13+90.99	16.17' (RT)	CRIMSON CLOVER DRIVE	7047.45		PT
47A	14+26.10	17.50' (RT)	CRIMSON CLOVER DRIVE	7047.56		INLET SIDE TBC
47B	14+42.43	17.50' (RT)	CRIMSON CLOVER DRIVE	7047.38		INLET SIDE TBC

CRIMSON CLOVER DRIVE PROFILE 2
STA 7+50.00 TO 15+00.00

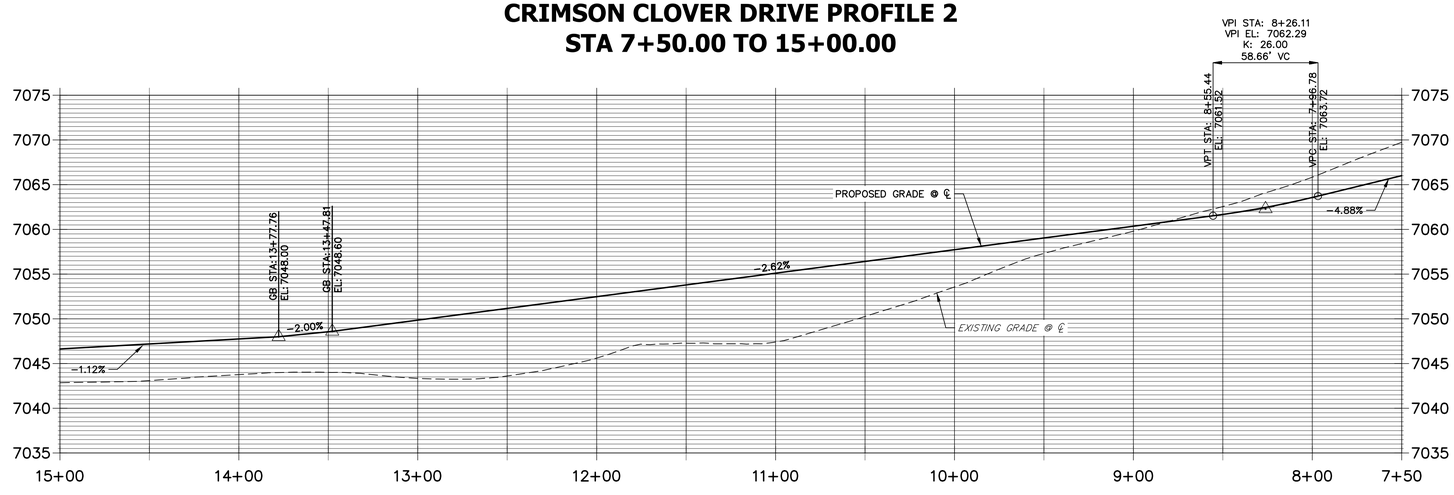

AS-BUILTS
05/24/2023
SF-2123

NOTES

1. ALL PROFILE ELEVATIONS ARE CENTERLINE UNLESS OTHERWISE NOTED.
2. ALL POINT TABULATIONS ARE FLOWLINE UNLESS OTHERWISE NOTED.
3. SEE SHEET 2 FOR LEGEND.
4. SEE SHEETS 6 FOR TYPICAL STREET SECTIONS.
5. SEE SHEETS 16 FOR CURB RETURN PROFILES.
6. SEE SHEETS 17–18 FOR SIGNAGE AND STRIPING.
7. ALL TYPE R INLETS SHALL CONFORM TO CDOT M&S M 604–12
8. ALL CURB RAMPS REQUIRE A CURB AND GUTTER TYPE TRANSITION. SEE DETAIL SHEET 19.
9. WHERE CONNECTING TO EXISTING ASPHALT ROADWAYS, CONTRACTOR SHALL MAKE A 2' SAWCUT TO A CLEAN VERTICAL FACE AND MATCH THE ASPHALT SECTION AND GRADE TO THE EXISTING SECTION/GRADE.
10. ALL CURB RAMPS, SIDEWALKS, & CROSSWALKS PART OF THE PEDESTRIAN ACCESS ROUTE SHALL MEET ALL APPLICABLE REQUIREMENTS OF EL PASO CHAPTER 6 AND THE PROWAG REQUIREMENTS THEREIN AND THE LATEST ADA REGULATIONS

EPC PCD 1/31/22

40 20 0 40 80

HORIZONTAL
ORIGINAL SCALE: 1" = 40'
VERTICAL
ORIGINAL SCALE: 1" = 8'

Know what's **below.**
Call before you dig.

ENGINEER'S STATEMENT

PREPARED UNDER MY DIRECT SUPERVISION AND ON BEHALF OF JR ENGINEERING

11/11/21
DATE

MIKE A. BRAMLETT, P.E.
COLORADO P.E. 32314
FOR AND ON BEHALF OF JR ENGINEERING, LLC

UNTIL SUCH TIME AS THESE DRAWINGS ARE APPROVED BY THE APPROPRIATE REVIEWING AGENCIES, JR ENGINEERING APPROVES THEIR USE ONLY FOR THE PURPOSES DESIGNATED BY WRITTEN AUTHORIZATION.

PREPARED FOR
MONUMENT HILL CM LLC
1864 WOODMOOR DR., STE. 100
COLORADO SPRINGS, CO 80920
ATTN: JOE DESJARDIN
719-476-0800
JDESJARDIN@PROTERRACO.COM

J·R ENGINEERING
A Westrian Company
Centennial 303-740-9393 • Colorado Springs 719-593-2593
Fort Collins 970-491-9888 • www.jrengineering.com

No.	REVISION	BY	DATE

H-SCALE	1"=40'
V-SCALE	1"=8'
DATE	11/11/21
DESIGNED BY	XXX
DRAWN BY	CRB
CHECKED BY	

CLOVERLEAF FILING NO. 2

ROADWAY PLAN AND PROFILE

SHEET 10 OF 20

JOB NO. 25158.01

X:\2510000.all\2515801\Drawings\Sheet Dwgs\SI01.dwg, SI04, 11/11/2021 11:46:18 AM, CS

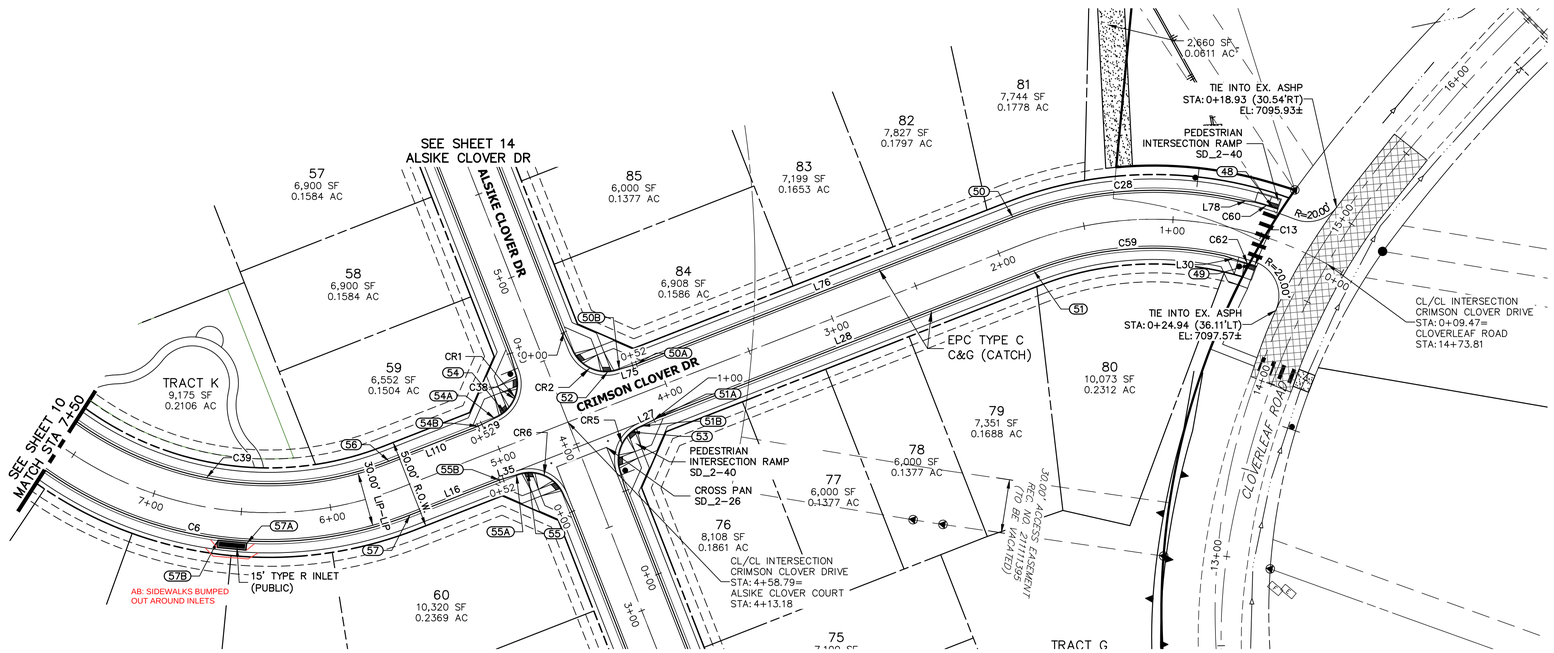

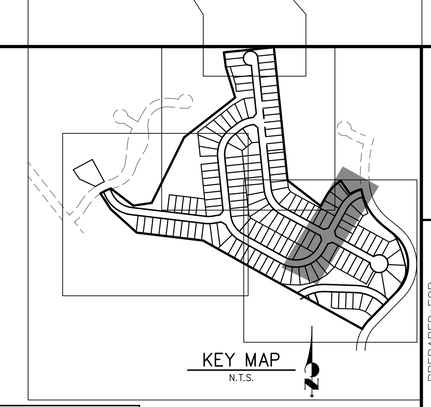

LINE TABLE		
LINE	BEARING	DISTANCE
L16	N28°37'08"E	53.45'
L27	N23°51'19"E	10.03'
L28	N28°37'08"E	225.87'
L30	N68°45'34"E	10.06'
L35	N33°22'57"E	10.03'
L75	N33°22'57"E	10.03'
L76	N28°37'08"E	225.87'
L78	N59°01'03"E	10.06'
L107	S56°37'03"E	10.03'
L109	S23°51'19"W	10.03'

CURVE TABLE			
CURVE	DELTA	RADIUS	LENGTH
C6	65°35'25"	216.17'	247.46'
C13	7°03'10"	18.00'	2.22'
C28	33°49'29"	216.17'	127.62'
C38	90°00'00"	20.50'	32.20'
C39	64°41'55"	183.83'	207.59'
C59	33°49'29"	183.83'	108.53'
C60	3°33'44"	217.00'	13.49'

CRIMSON CLOVER DRIVE PROFILE 3
STA 0+00.00 TO 7+50.00

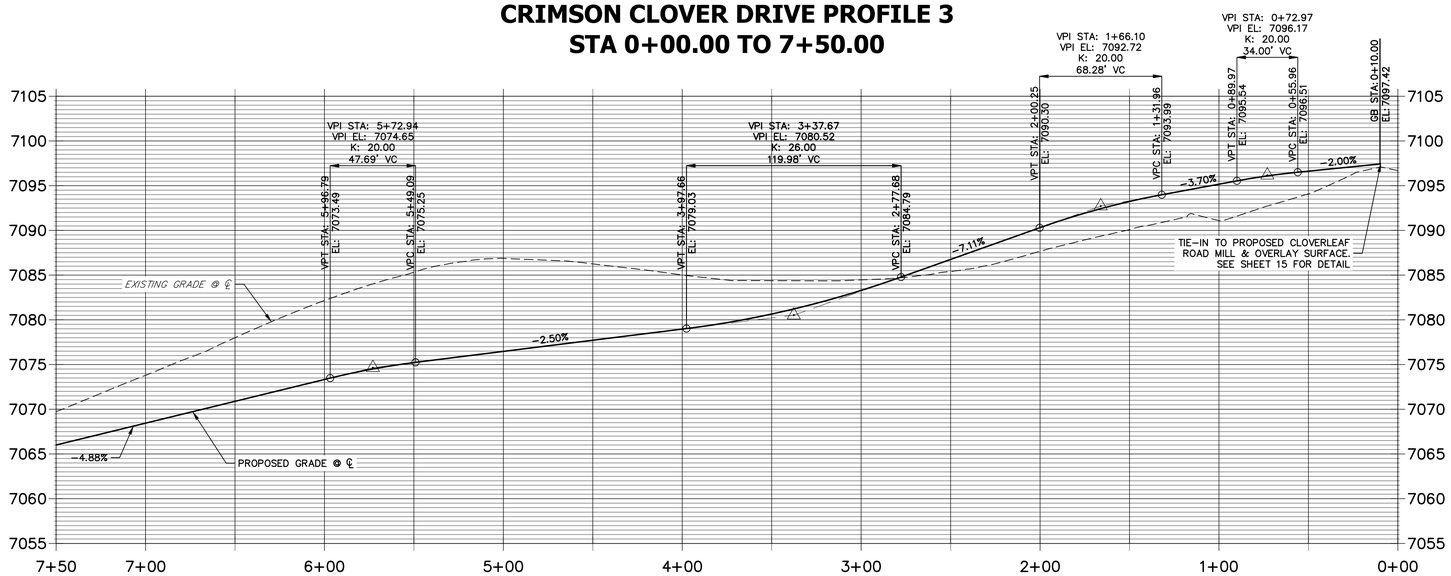

ROADWAY POINT TABLULATION						
POINT NUMBER	STATION	OFFSET	ALIGNMENT	ELEVATION	NOTES	DESCRIPTION
48	0+48.42	17.00' (RT)	CRIMSON CLOVER DRIVE	7096.19		RAMP MID PT
49	0+50.18	17.00' (LT)	CRIMSON CLOVER DRIVE	7096.14		RAMP MID PT
50	1+85.42	16.17' (RT)	CRIMSON CLOVER DRIVE	7090.89		PT
50A	4+11.29	16.17' (RT)	CRIMSON CLOVER DRIVE	7078.29		C&G TRANSITION
50B	4+21.29	17.00' (RT)	CRIMSON CLOVER DRIVE	7077.83		PCR
51	1+85.42	16.17' (LT)	CRIMSON CLOVER DRIVE	7090.89		PT
51B	4+21.29	17.00' (LT)	CRIMSON CLOVER DRIVE	7077.97		PCR
51A	4+11.29	16.17' (LT)	CRIMSON CLOVER DRIVE	7078.29		C&G TRANSITION
52	4+27.79	18.06' (RT)	CRIMSON CLOVER DRIVE	7077.54		RAMP MID PT
53	4+27.79	18.06' (LT)	CRIMSON CLOVER DRIVE	7077.87		RAMP MID PT
54B	5+06.29	16.17' (RT)	CRIMSON CLOVER DRIVE	7075.91		C&G TRANSITION
54A	4+96.29	17.00' (RT)	CRIMSON CLOVER DRIVE	7076.11		PCR
54	4+89.79	18.06' (RT)	CRIMSON CLOVER DRIVE	7076.25		RAMP MID PT
55B	5+06.29	16.17' (LT)	CRIMSON CLOVER DRIVE	7075.91		C&G TRANSITION
55A	4+96.29	17.00' (LT)	CRIMSON CLOVER DRIVE	7076.20		PCR
55	4+89.79	18.06' (LT)	CRIMSON CLOVER DRIVE	7076.43		RAMP MID PT
56	5+59.90	16.17' (RT)	CRIMSON CLOVER DRIVE	7074.55		PC
57	5+59.90	16.17' (LT)	CRIMSON CLOVER DRIVE	7074.55		PC
57B	6+60.94	17.50' (LT)	CRIMSON CLOVER DRIVE	7070.43		INLET SIDE TBC
57A	6+45.92	17.50' (LT)	CRIMSON CLOVER DRIVE	7071.17		INLET SIDE TBC

AS-BUILTS
05/24/2023
SF-2123

Mike Bramlett
32314

40 20 0 40 80

HORIZONTAL
ORIGINAL SCALE: 1" = 40'
VERTICAL
ORIGINAL SCALE: 1" = 8'

811
Know what's below.
Call before you dig.

NOTES

1. ALL PROFILE ELEVATIONS ARE CENTERLINE UNLESS OTHERWISE NOTED.
2. ALL POINT TABULATIONS ARE FLOWLINE UNLESS OTHERWISE NOTED.
3. SEE SHEET 2 FOR LEGEND.
4. SEE SHEETS 6 FOR TYPICAL STREET SECTIONS.
5. SEE SHEETS 16 FOR CURB RETURN PROFILES.
6. SEE SHEETS 17-18 FOR SIGNAGE AND STRIPING.
7. ALL TYPE R INLETS SHALL CONFORM TO CDOT M&S M 604-12
8. ALL CURB RAMPS REQUIRE A CURB AND GUTTER TYPE TRANSITION. SEE DETAIL SHEET 19.
9. WHERE CONNECTING TO EXISTING ASPHALT ROADWAYS, CONTRACTOR SHALL MAKE A 2' SAWCUT TO A CLEAN VERTICAL FACE AND MATCH THE ASPHALT SECTION AND GRADE TO THE EXISTING SECTION/GRADE.
10. ALL CURB RAMPS, SIDEWALKS, & CROSSWALKS PART OF THE PEDESTRIAN ACCESS ROUTE SHALL MEET ALL APPLICABLE REQUIREMENTS OF EL PASO CHAPTER 6 AND THE PROWAG REQUIREMENTS THEREIN AND THE LATEST ADA REGULATIONS

EPC PCD 1/31/22

ENGINEER'S STATEMENT

PREPARED UNDER MY DIRECT SUPERVISION AND ON BEHALF OF JR ENGINEERING

11/11/21
DATE

MIKE A. BRAMLETT, P.E.
COLORADO P.E. 32314
FOR AND ON BEHALF OF JR ENGINEERING, LLC

UNTIL SUCH TIME AS THESE DRAWINGS ARE APPROVED BY THE APPROPRIATE REVIEWING AGENCIES, JR ENGINEERING APPROVES THEIR USE ONLY FOR THE PURPOSES DESIGNATED BY WRITTEN AUTHORIZATION.

PREPARED FOR
MONUMENT HILL CM LLC
1864 WOODMOOR DR., STE. 100
COLORADO SPRINGS, CO 80920
ATTN: JOE DESJARDIN
719-476-0800
JDESJARDIN@PROTERRACO.COM

J·R ENGINEERING
A Westrian Company
Centennial 303-740-9393 • Colorado Springs 719-593-2593
Fort Collins 970-491-9888 • www.jrengineering.com

No.	REVISION	BY	DATE

H-SCALE	1"=40'
V-SCALE	1"=8'
DATE	11/11/21
DESIGNED BY	XXX
DRAWN BY	CRB
CHECKED BY	

CLOVERLEAF FILING NO. 2
ROADWAY PLAN AND PROFILE

SHEET 11 OF 20

JOB NO. 25158.01

X:\2515000.all\2515801\Drawings\Sheet Dwgs\SI01.dwg, SI05, 11/11/2021 11:47:00 AM, CS

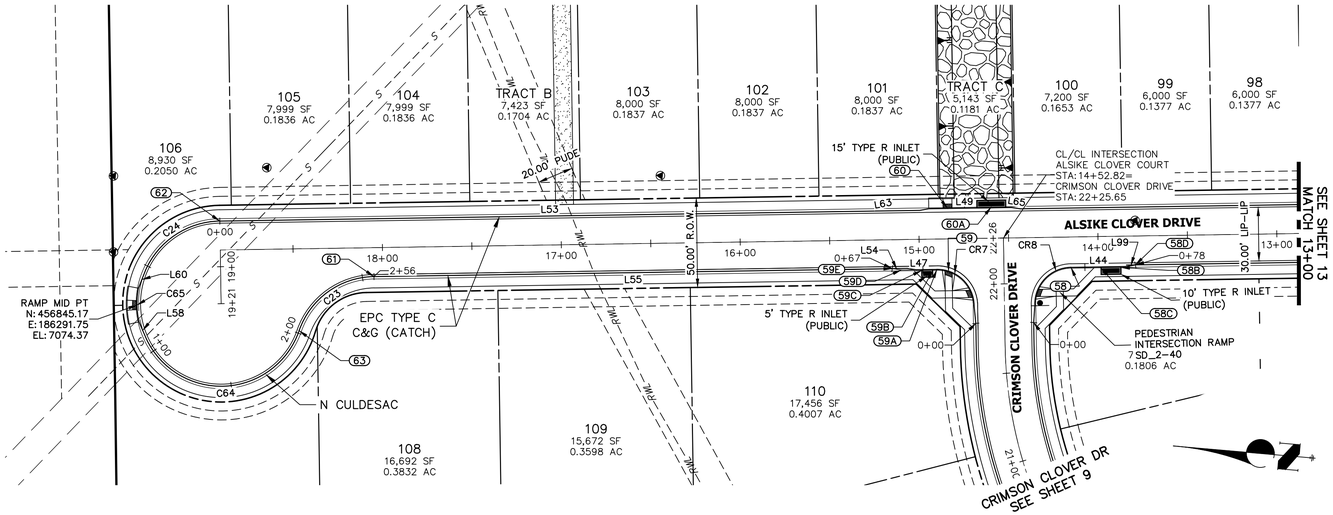

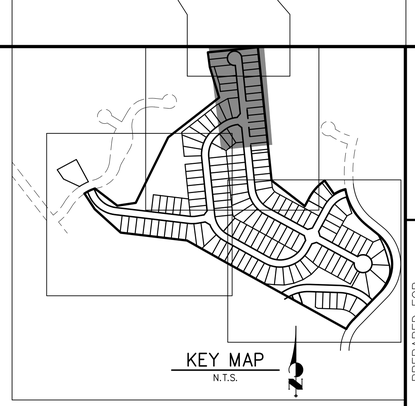

LINE TABLE		
LINE	BEARING	DISTANCE
L44	S05°52'43"E	30.99'
L47	N05°52'43"W	19.90'
L49	S05°52'43"E	68.50'
L53	S05°52'42"E	369.01'
L54	N03°35'02"E	5.07'
L55	N05°52'43"W	289.77'
L58	N61°32'49"E	10.36'
L60	S73°25'41"E	10.36'
L63	S15°19'07"E	5.07'
L65	S03°33'54"W	5.07'
L99	S15°20'27"E	5.07'

CURVE TABLE			
CURVE	DELTA	RADIUS	LENGTH
C23	70°00'37"	45.00'	54.99'
C24	65°44'55"	46.17'	52.98'
C64	135°38'05"	46.17'	109.30'
C65	23°09'44"	47.00'	19.00'

ROADWAY POINT TABLULATION

POINT NUMBER	STATION	OFFSET	ALIGNMENT	ELEVATION	NOTES	DESCRIPTION
58	14+15.32	17.00' (LT)	ALSIKE CLOVER COURT	7064.26		PCR
58B	13+87.33	17.50' (LT)	ALSIKE CLOVER COURT	7065.25		INLET SIDE TBC
58C	13+98.66	17.50' (LT)	ALSIKE CLOVER COURT	7065.07		INLET SIDE TBC
58D	13+79.33	16.17' (LT)	ALSIKE CLOVER COURT	7064.91		C&G TRANSITION
59	14+83.82	18.06' (LT)	ALSIKE CLOVER COURT	7063.98		RAMP MID PT
59A	14+90.32	17.00' (LT)	ALSIKE CLOVER COURT	7064.19		PCR
59B	14+92.55	17.50' (LT)	ALSIKE CLOVER COURT	7064.73		INLET SIDE TBC
59C	14+98.89	17.50' (LT)	ALSIKE CLOVER COURT	7064.83		INLET SIDE TBC
59D	15+10.22	17.00' (LT)	ALSIKE CLOVER COURT	7064.53		C&G TRANSITION
59E	15+15.22	16.17' (LT)	ALSIKE CLOVER COURT	7064.71		C&G TRANSITION
60	14+83.82	17.00' (RT)	ALSIKE CLOVER COURT	7064.19		RAMP MID PT
60A	14+59.38	17.50' (RT)	ALSIKE CLOVER COURT	7064.62		LP/ INLET MID TBC
61	18+04.98	16.17' (LT)	ALSIKE CLOVER COURT	7072.04		PT/END N CULDESAC
62	18+90.66	16.17' (RT)	ALSIKE CLOVER COURT	7074.23		PC/BEGIN N CULDESAC
63	18+47.27	45.78' (LT)	ALSIKE CLOVER COURT	7072.97		PRC

ALSIKE CLOVER COURT PROFILE 1
STA 13+00.00 TO 19+50.00

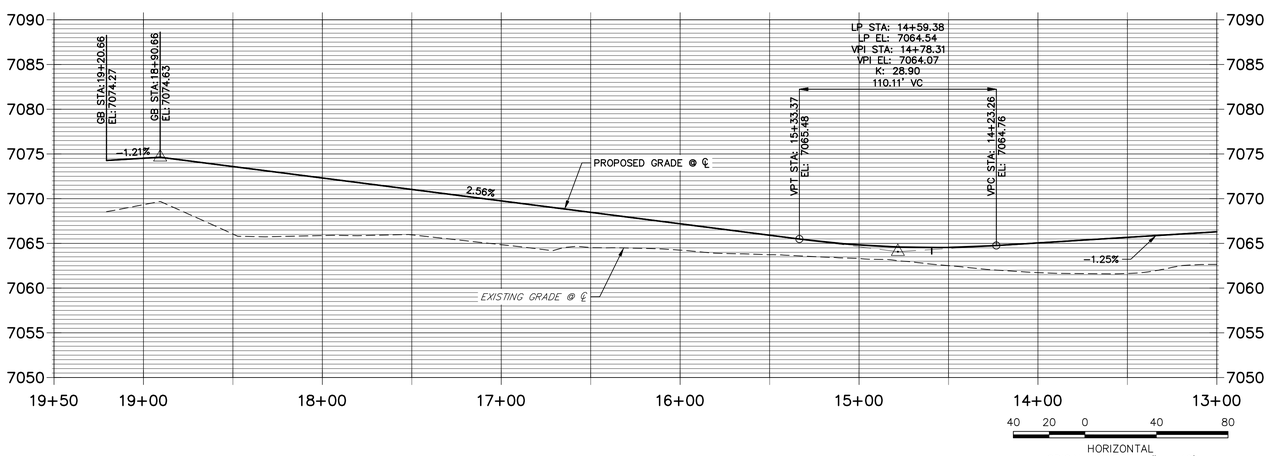

HORIZONTAL
ORIGINAL SCALE: 1" = 40'
VERTICAL
ORIGINAL SCALE: 1" = 8'

N CULDESAC FL PROFILE
STA 0+00.00 TO 2+56.45

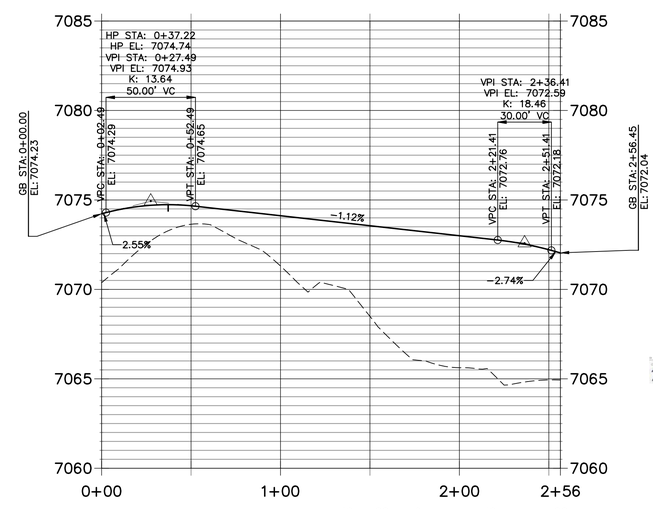

HORIZONTAL
ORIGINAL SCALE: 1" = 40'
VERTICAL
ORIGINAL SCALE: 1" = 4'
EPC PCD 1/31/22

AS-BUILTS
05/24/2023
SF-2123

NOTES

1. ALL PROFILE ELEVATIONS ARE CENTERLINE UNLESS OTHERWISE NOTED.
2. ALL POINT TABULATIONS ARE FLOWLINE UNLESS OTHERWISE NOTED.
3. SEE SHEET 2 FOR LEGEND.
4. SEE SHEETS 6 FOR TYPICAL STREET SECTIONS.
5. SEE SHEETS 16 FOR CURB RETURN PROFILES.
6. SEE SHEETS 17–18 FOR SIGNAGE AND STRIPING.
7. ALL TYPE R INLETS SHALL CONFORM TO CDOT M&S M 604–12.
8. ALL CURB RAMPS REQUIRE A CURB AND GUTTER TYPE TRANSITION. SEE DETAIL SHEET 19.
9. WHERE CONNECTING TO EXISTING ASPHALT ROADWAYS, CONTRACTOR SHALL MAKE A 2' SAWCUT TO A CLEAN VERTICAL FACE AND MATCH THE ASPHALT SECTION AND GRADE TO THE EXISTING SECTION/GRADE.
10. ALL CURB RAMPS, SIDEWALKS, & CROSSWALKS PART OF THE PEDESTRIAN ACCESS ROUTE SHALL MEET ALL APPLICABLE REQUIREMENTS OF EL PASO CHAPTER 6 AND THE PROWAG REQUIREMENTS THEREIN AND THE LATEST ADA REGULATIONS

Know what's below.
Call before you dig.

ENGINEER'S STATEMENT

PREPARED UNDER MY DIRECT SUPERVISION AND ON BEHALF OF JR ENGINEERING

11/11/21
DATE

MIKE A. BRAMLETT, P.E.
COLORADO P.E. 32314
FOR AND ON BEHALF OF JR ENGINEERING, LLC

UNTIL SUCH TIME AS THESE DRAWINGS ARE APPROVED BY THE APPROPRIATE REVIEWING AGENCIES, JR ENGINEERING APPROVES THEIR USE ONLY FOR THE PURPOSES DESIGNATED BY WRITTEN AUTHORIZATION.

PREPARED FOR
MONUMENT HILL CM LLC
1864 WOODMOOR DR., STE. 100
COLORADO SPRINGS, CO 80920
ATTN: JOE DESJARDIN
719-476-0800
JDESJARDIN@PROTERRACO.COM

J·R ENGINEERING
A Westrian Company
Centennial 303-740-9393 • Colorado Springs 719-593-2593
Fort Collins 970-491-9888 • www.jrengineering.com

No.	REVISION	BY	DATE

H-SCALE	1" = 40'
V-SCALE	VARIES
DATE	11/11/21
DESIGNED BY	XXX
DRAWN BY	CRB
CHECKED BY	

CLOVERLEAF FILING NO. 2

ROADWAY PLAN AND PROFILE

SHEET 12 OF 20

JOB NO. 25158.01

X:\2510000.all\2515801\Drawings\Sheet Dwgs\SI01.dwg, SI06, 11/11/2021 11:47:35 AM, CS

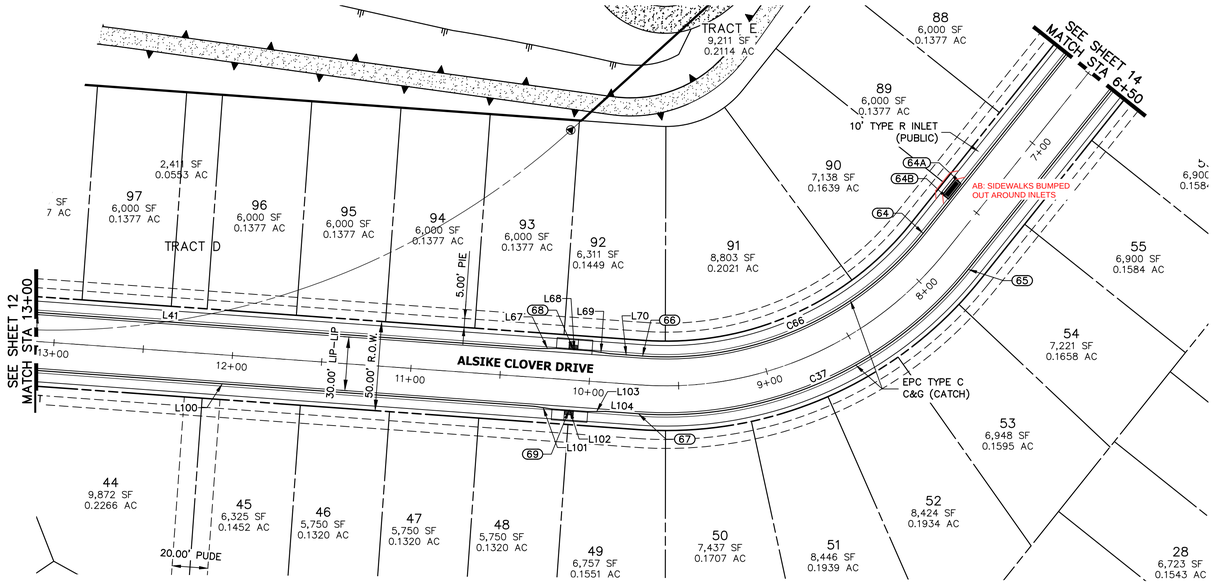

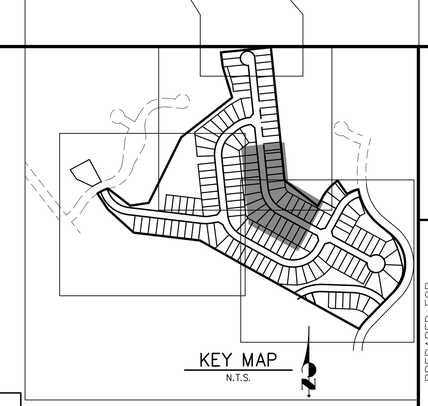

LINE TABLE		
LINE	BEARING	DISTANCE
L41	S05°52'42"E	413.50'
L67	S10°38'26"E	10.03'
L68	S05°52'43"E	20.00'
L69	S01°06'56"E	10.03'
L70	S05°52'41"E	18.35'
L99	S15°20'27"E	5.07'
L100	S05°52'43"E	349.67'
L101	S01°06'54"E	10.03'
L102	S05°52'43"E	20.00'
L103	S10°38'32"E	10.03'

CURVE TABLE			
CURVE	DELTA	RADIUS	LENGTH
C37	55°30'09"	216.17'	209.40'
C66	55°30'09"	183.83'	178.08'

ROADWAY POINT TABLULATION						
POINT NUMBER	STATION	OFFSET	ALIGNMENT	ELEVATION	NOTES	DESCRIPTION
64	7+77.57	16.17' (RT)	ALSIKE CLOVER COURT	7072.44		PC
64A	7+42.52	17.50' (RT)	ALSIKE CLOVER COURT	7073.35		INLET SIDE TBC
64B	7+53.85	17.50' (RT)	ALSIKE CLOVER COURT	7073.20		INLET SIDE TBC
65	7+77.57	16.17' (LT)	ALSIKE CLOVER COURT	7072.41		PC
66	9+71.31	16.17' (RT)	ALSIKE CLOVER COURT	7070.01		PT
67	9+71.31	16.17' (LT)	ALSIKE CLOVER COURT	7069.99		PT
68	10+10.15	17.00' (RT)	ALSIKE CLOVER COURT	7069.46		RAMP MID PT
69	10+10.15	17.00' (LT)	ALSIKE CLOVER COURT	7069.46		RAMP MID PT

ALSIKE CLOVER COURT PROFILE 2
STA 6+50.00 TO 13+00.00

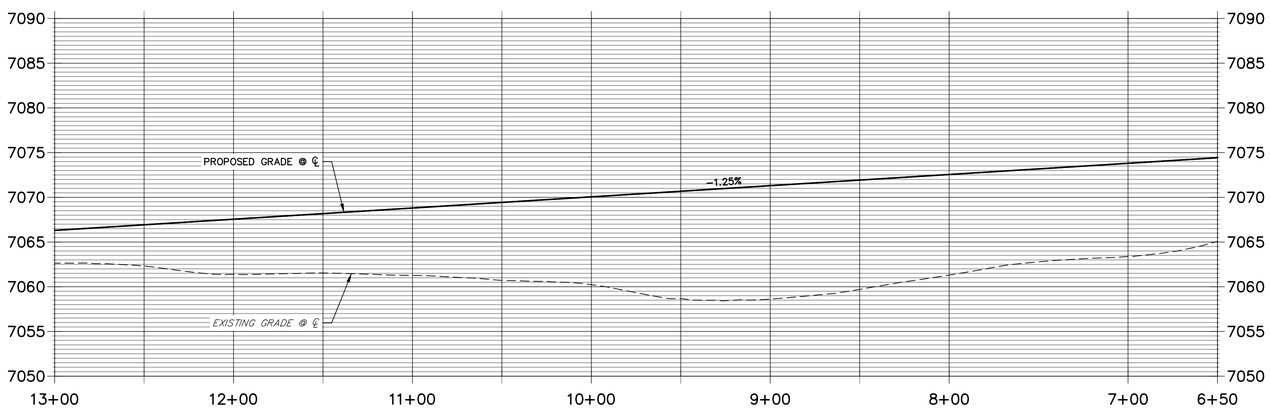

AS-BUILTS
05/24/2023
SF-2123

NOTES

1. ALL PROFILE ELEVATIONS ARE CENTERLINE UNLESS OTHERWISE NOTED.
2. ALL POINT TABULATIONS ARE FLOWLINE UNLESS OTHERWISE NOTED.
3. SEE SHEET 2 FOR LEGEND.
4. SEE SHEETS 6 FOR TYPICAL STREET SECTIONS.
5. SEE SHEETS 16 FOR CURB RETURN PROFILES.
6. SEE SHEETS 17–18 FOR SIGNAGE AND STRIPING.
7. ALL TYPE R INLETS SHALL CONFORM TO CDOT M&S M 604–12
8. ALL CURB RAMPS REQUIRE A CURB AND GUTTER TYPE TRANSITION. SEE DETAIL SHEET 19.
9. WHERE CONNECTING TO EXISTING ASPHALT ROADWAYS, CONTRACTOR SHALL MAKE A 2' SAWCUT TO A CLEAN VERTICAL FACE AND MATCH THE ASPHALT SECTION AND GRADE TO THE EXISTING SECTION/GRADE.
10. ALL CURB RAMPS, SIDEWALKS, & CROSSWALKS PART OF THE PEDESTRIAN ACCESS ROUTE SHALL MEET ALL APPLICABLE REQUIREMENTS OF EL PASO CHAPTER 6 AND THE PROWAG REQUIREMENTS THEREIN AND THE LATEST ADA REGULATIONS

40 20 0 40 80

HORIZONTAL
ORIGINAL SCALE: 1" = 40'
VERTICAL
ORIGINAL SCALE: 1" = 8'

Know what's below. Call before you dig.

EPC PCD 1/31/22

ENGINEER'S STATEMENT

PREPARED UNDER MY DIRECT SUPERVISION AND ON BEHALF OF JR ENGINEERING

11/11/21

MIKE A. BRAMLETT, P.E. DATE
COLORADO P.E. 32314
FOR AND ON BEHALF OF JR ENGINEERING, LLC

UNTIL SUCH TIME AS THESE DRAWINGS ARE APPROVED BY THE APPROPRIATE REVIEWING AGENCIES, JR ENGINEERING APPROVES THEIR USE ONLY FOR THE PURPOSES DESIGNATED BY WRITTEN AUTHORIZATION.

PREPARED FOR
MONUMENT HILL CM LLC
1864 WOODMOOR DR., STE. 100
COLORADO SPRINGS, CO 80920
ATTN: JOE DESJARDIN
719-476-0800
JDESJARDIN@PROTERRACO.COM

J·R ENGINEERING
A Westrian Company
Centennial 303-740-9393 • Colorado Springs 719-593-2593
Fort Collins 970-491-9888 • www.jrengineering.com

No.	REVISION	BY	DATE

H-SCALE	1"=40'
V-SCALE	1"=8'
DATE	11/11/21
DESIGNED BY	XXX
DRAWN BY	CRB
CHECKED BY	

CLOVERLEAF FILING NO. 2
ROADWAY PLAN AND PROFILE

SHEET 13 OF 20
JOB NO. 25158.01

X:\2510000.all\25158\01\Drawings\Sheet Dwgs\S01.dwg, S07, 11/11/2021 11:48:15 AM, CS

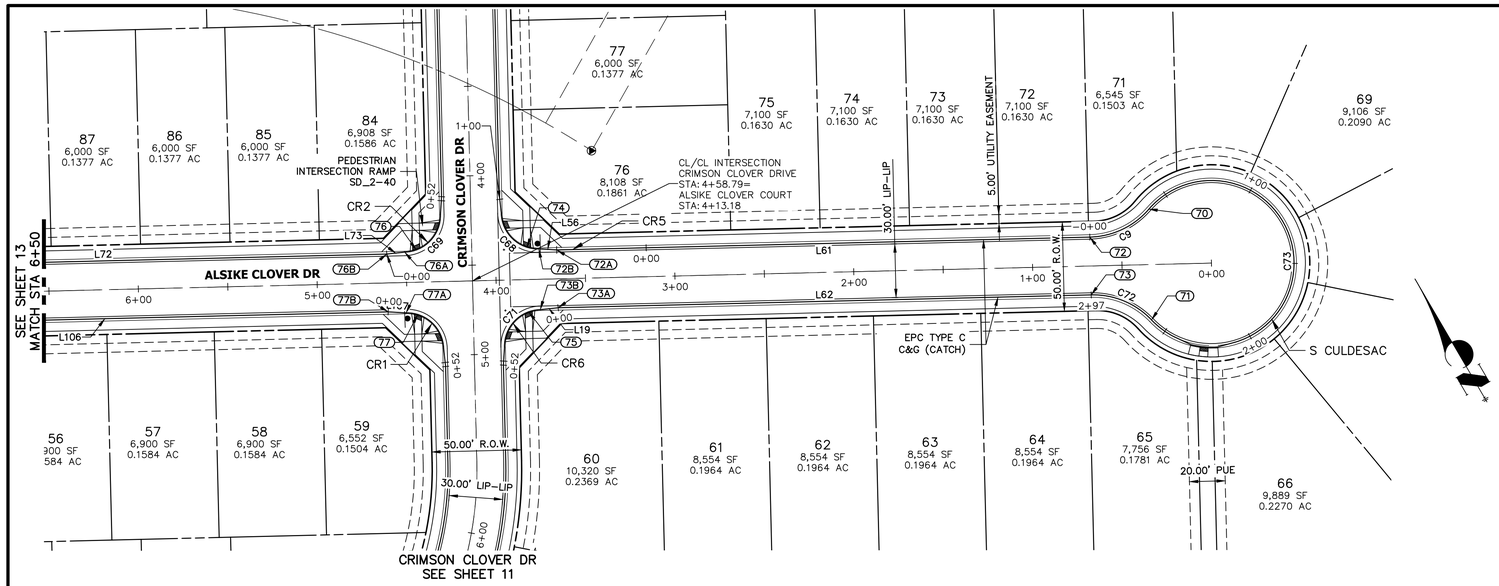

ALSIKE CLOVER COURT PROFILE 3
STA 0+00.00 TO 6+50.00

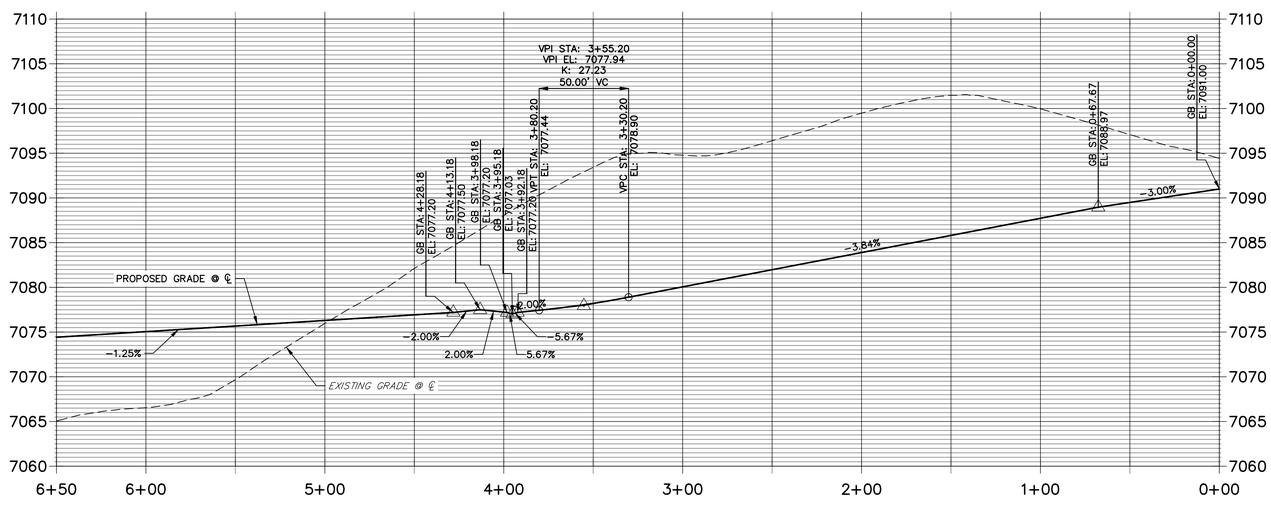

40 20 0 40 80

HORIZONTAL
ORIGINAL SCALE: 1" = 40'
VERTICAL
ORIGINAL SCALE: 1" = 8'

LINE TABLE		
LINE	BEARING	DISTANCE
L19	S66°08'41"E	10.03'
L56	N56°37'03"W	10.03'
L61	N61°22'52"W	298.08'
L62	S61°22'52"E	298.08'
L72	S61°22'52"E	316.88'
L73	S66°08'41"E	10.03'
L106	S61°22'52"E	316.88'
L107	S56°37'03"E	10.03'

CURVE TABLE			
CURVE	DELTA	RADIUS	LENGTH
C9	47°51'46"	45.00'	37.59'
C38	90°00'00"	20.50'	32.20'
C68	90°00'00"	20.50'	32.20'
C69	90°00'00"	20.50'	32.20'
C71	90°00'00"	20.50'	32.20'
C72	47°51'46"	45.00'	37.59'
C73	275°43'32"	46.17'	222.18'

ROADWAY POINT TABLULATION						
POINT NUMBER	STATION	OFFSET	ALIGNMENT	ELEVATION	NOTES	DESCRIPTION
70	0+34.24	30.98' (RT)	ALSIKE CLOVER COURT	7089.57		PRC
71	0+34.24	30.98' (LT)	ALSIKE CLOVER COURT	7089.57		PRC
72	0+67.61	16.17' (RT)	ALSIKE CLOVER COURT	7088.58		PT
72A	3+65.68	16.17' (RT)	ALSIKE CLOVER COURT	7077.99		C&G TRANSITION
72B	3+75.68	17.00' (RT)	ALSIKE CLOVER COURT	7077.73		PCR
73	0+67.61	16.17' (LT)	ALSIKE CLOVER COURT	7088.57		PT
73A	3+65.68	16.17' (LT)	ALSIKE CLOVER COURT	7077.38		C&G TRANSITION
73B	3+75.68	17.00' (LT)	ALSIKE CLOVER COURT	7077.15		PCR
74	3+82.18	18.06' (RT)	ALSIKE CLOVER COURT	7077.66		RAMP MID PT
75	3+82.18	18.06' (LT)	ALSIKE CLOVER COURT	7077.01		RAMP MID PT
76	4+44.18	18.06' (RT)	ALSIKE CLOVER COURT	7076.87		RAMP MID PT
76A	4+50.68	17.00' (RT)	ALSIKE CLOVER COURT	7076.69		PCR
76B	4+60.68	16.17' (RT)	ALSIKE CLOVER COURT	7076.39		C&G TRANSITION
77	4+44.18	18.06' (LT)	ALSIKE CLOVER COURT	7076.53		RAMP MID PT
77A	4+50.68	17.00' (LT)	ALSIKE CLOVER COURT	7076.51		PCR
77B	4+60.68	16.17' (LT)	ALSIKE CLOVER COURT	7076.39		C&G TRANSITION

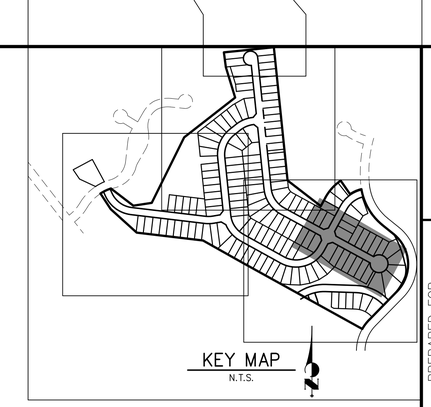

AS-BUILTS
05/24/2023
SF-2123

S CULDESAC FL PROFILE
STA 0+00.00 TO 2+97.37

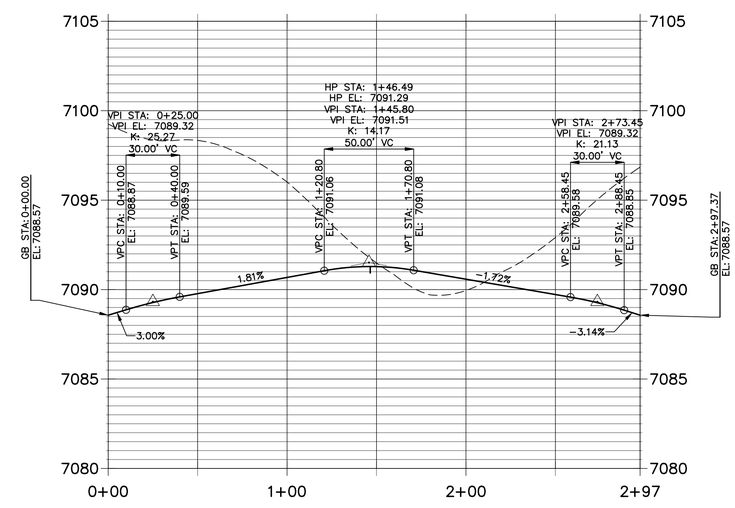

40 20 0 40 80

HORIZONTAL
ORIGINAL SCALE: 1" = 40'
VERTICAL
ORIGINAL SCALE: 1" = 4'

NOTES

1. ALL PROFILE ELEVATIONS ARE CENTERLINE UNLESS OTHERWISE NOTED.
2. ALL POINT TABULATIONS ARE FLOWLINE UNLESS OTHERWISE NOTED.
3. SEE SHEET 2 FOR LEGEND.
4. SEE SHEETS 6 FOR TYPICAL STREET SECTIONS.
5. SEE SHEETS 16 FOR CURB RETURN PROFILES.
6. SEE SHEETS 17–18 FOR SIGNAGE AND STRIPING.
7. ALL TYPE R INLETS SHALL CONFORM TO CDOT M&S M 604–12
8. ALL CURB RAMPS REQUIRE A CURB AND GUTTER TYPE TRANSITION. SEE DETAIL SHEET 19.
9. WHERE CONNECTING TO EXISTING ASPHALT ROADWAYS, CONTRACTOR SHALL MAKE A 2' SAWCUT TO A CLEAN VERTICAL FACE AND MATCH THE ASPHALT SECTION AND GRADE TO THE EXISTING SECTION/GRADE.
10. ALL CURB RAMPS, SIDEWALKS, & CROSSWALKS PART OF THE PEDESTRIAN ACCESS ROUTE SHALL MEET ALL APPLICABLE REQUIREMENTS OF EL PASO CHAPTER 6 AND THE PROWAG REQUIREMENTS THEREIN AND THE LATEST ADA REGULATIONS

EPC PCD 1/31/22

Know what's below. Call before you dig.

ENGINEER'S STATEMENT

PREPARED UNDER MY DIRECT SUPERVISION AND ON BEHALF OF JR ENGINEERING

MIKE A. BRAMLETT, P.E.
COLORADO P.E. 32314
FOR AND ON BEHALF OF JR ENGINEERING, LLC

DATE 11/11/21

UNTIL SUCH TIME AS THESE DRAWINGS ARE APPROVED BY THE APPROPRIATE REVIEWING AGENCIES, JR ENGINEERING APPROVES THEIR USE ONLY FOR THE PURPOSES DESIGNATED BY WRITTEN AUTHORIZATION.

PREPARED FOR
MONUMENT HILL CM LLC
1864 WOODMOOR DR., STE. 100
COLORADO SPRINGS, CO 80920
ATTN: JOE DESJARDIN
719-476-0800
JDESJARDIN@PROTERRACO.COM

J·R ENGINEERING
A Westrian Company
Centennial 303-740-9393 • Colorado Springs 719-593-2593
Fort Collins 970-491-9888 • www.jrengineering.com

No.	REVISION	BY	DATE

H-SCALE	1"=40'
V-SCALE	VARIES
DATE	11/11/21
DESIGNED BY	XXX
DRAWN BY	CRB
CHECKED BY	

CLOVERLEAF FILING NO. 2

ROADWAY PLAN AND PROFILE

SHEET 14 OF 20

JOB NO. 25158.01

X:\2510000.all\25158\10\Drawings\Sheet Dwgs\S01.dwg, S08, 11/11/2021 11:48:54 AM, CS

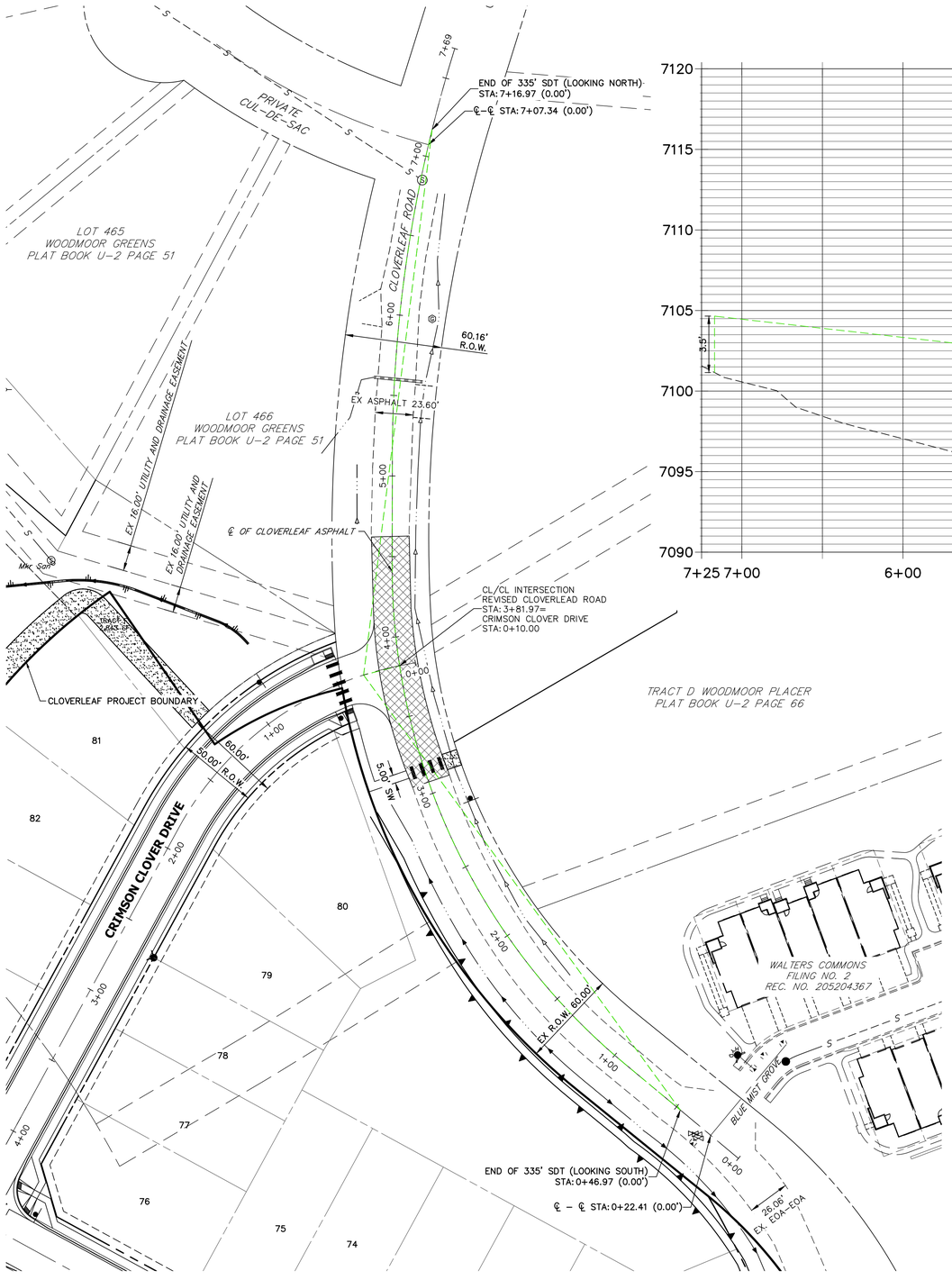

CLOVERLEAD ROAD PROFILE
STA 0+00.00 TO 7+25.00

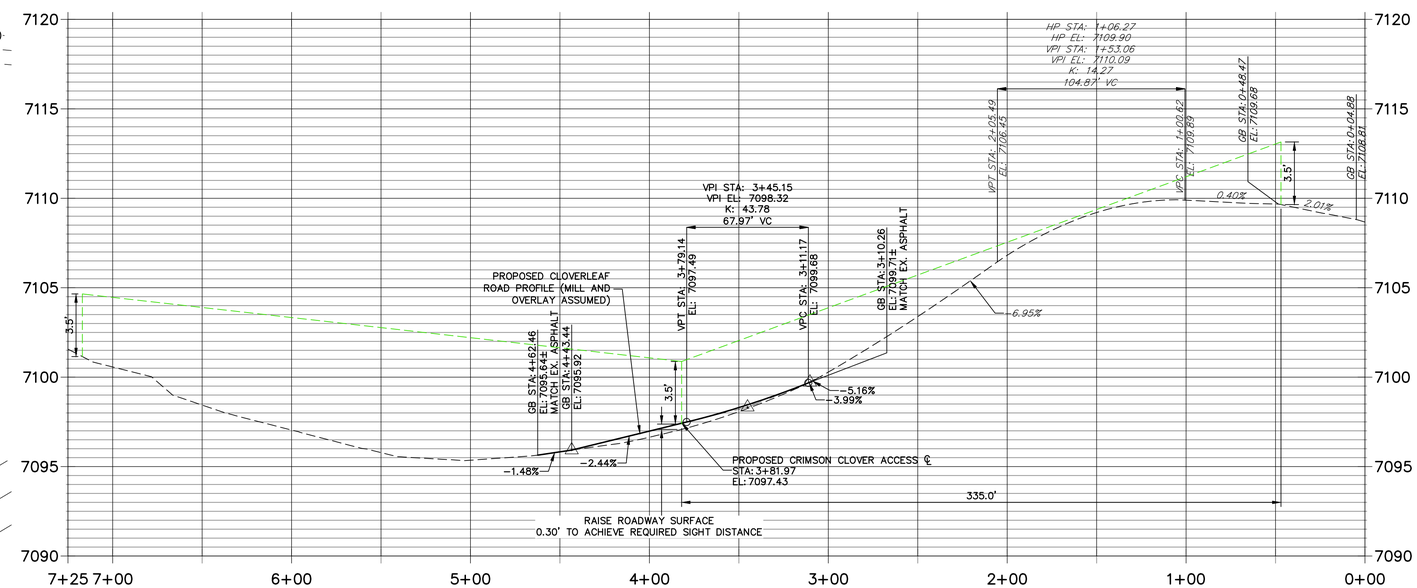

AS-BUILTS
05/24/2023
SF-2123

40 20 0 40 80

HORIZONTAL
ORIGINAL SCALE: 1" = 40'
VERTICAL
ORIGINAL SCALE: 1" = 4'

Know what's **below.**
Call before you dig.

EPC PCD 1/31/22

ENGINEER'S STATEMENT

PREPARED UNDER MY DIRECT SUPERVISION AND ON BEHALF OF JR ENGINEERING

11/11/21

MIKE A. BRAMLETT, P.E.
COLORADO P.E. 32314
FOR AND ON BEHALF OF JR ENGINEERING, LLC

DATE

UNTIL SUCH TIME AS THESE DRAWINGS ARE APPROVED BY THE APPROPRIATE REVIEWING AGENCIES, JR ENGINEERING APPROVES THEIR USE ONLY FOR THE PURPOSES DESIGNATED BY WRITTEN AUTHORIZATION.

PREPARED FOR
MONUMENT HILL CM LLC
1864 WOODMOOR DR., STE. 100
COLORADO SPRINGS, CO 80920
ATTN: JOE DESJARDIN
719-476-0800
JDESJARDIN@PROTERRACO.COM

J·R ENGINEERING
A Westrian Company
Centennial 303-740-9393 • Colorado Springs 719-593-2593
Fort Collins 970-491-9888 • www.jrengineering.com

No.	REVISION	BY	DATE

H-SCALE	1"=40'
V-SCALE	1"=4'
DATE	11/11/21
DESIGNED BY	XXX
DRAWN BY	CRB
CHECKED BY	

CLOVERLEAF FILING NO. 2

MILL AND OVERLAY PLAN

SHEET 15 OF 20

JOB NO. 25158.01

X:\2510000.all\2515811\Drawings\Sheet Dwgs\Cloverleaf\RoadPlan\Profile.dwg, Mill & Overlay Exhibit, 11/11/2021 11:50:22 AM, CS

CR1 PROFILE
STA 0+00.00 TO 0+52.27

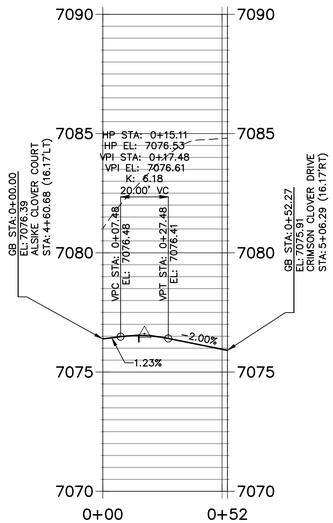

CR2 PROFILE
STA 0+00.00 TO 0+52.27

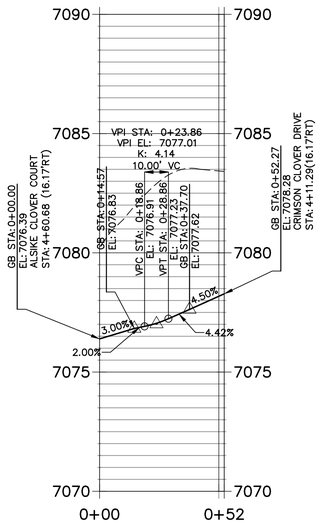

CR3 PROFILE
STA 0+00.00 TO 0+50.91

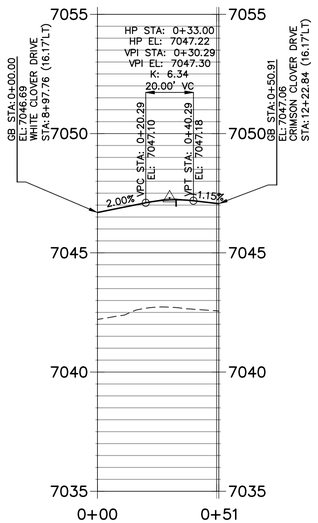

CR4 PROFILE
STA 0+00.00 TO 0+49.03

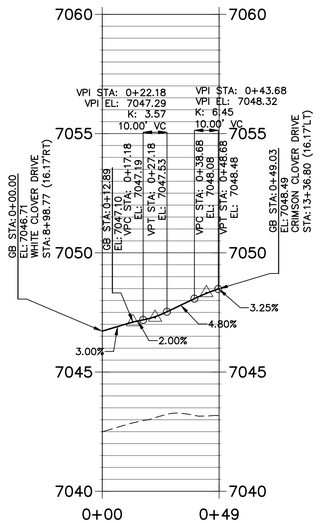

CR5 PROFILE
STA 0+00.00 TO 1+02.27

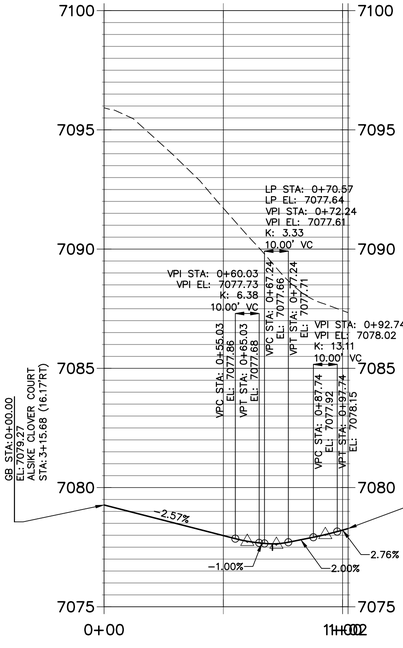

CR6 PROFILE
STA 0+00.00 TO 0+52.27

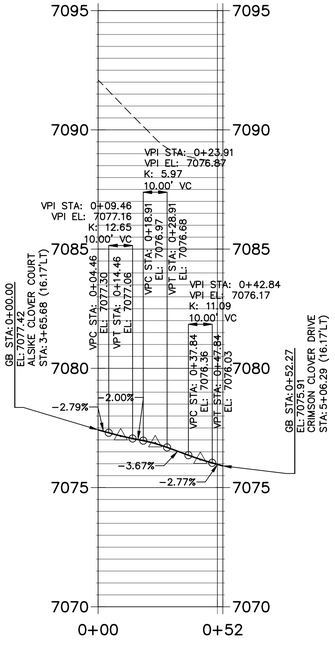

CR7 PROFILE
STA 0+00.00 TO 0+67.21

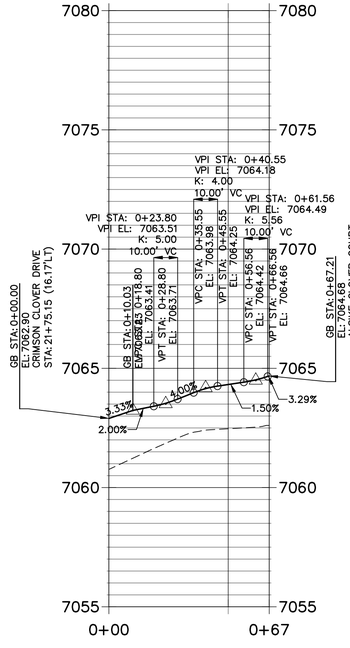

CR8 PROFILE
STA 0+00.00 TO 0+78.30

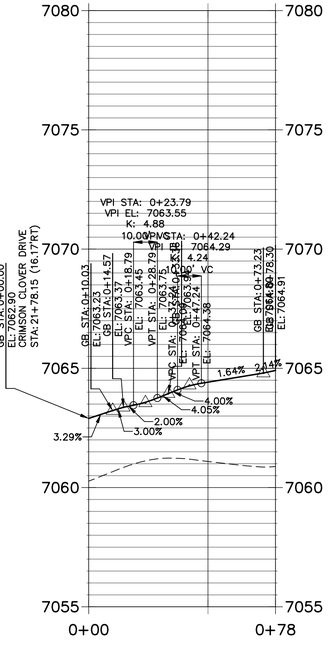

AS-BUILTS
05/24/2023
SF-2123

30 15 0 30 60

HORIZONTAL
ORIGINAL SCALE: 1" = 30'
VERTICAL
ORIGINAL SCALE: 1" = 3'

811
Know what's **below.**
Call before you dig.

ENGINEER'S STATEMENT

PREPARED UNDER MY DIRECT SUPERVISION AND ON BEHALF OF JR ENGINEERING

MIKE A. BRAMLETT, P.E.
COLORADO P.E. 32314
FOR AND ON BEHALF OF JR ENGINEERING, LLC

11/11/21
DATE

EPC PCD 1/31/22

UNTIL SUCH TIME AS THESE DRAWINGS ARE APPROVED BY THE APPROPRIATE REVIEWING AGENCIES, JR ENGINEERING APPROVES THEIR USE ONLY FOR THE PURPOSES DESIGNATED BY WRITTEN AUTHORIZATION.

PREPARED FOR
MONUMENT HILL CM LLC
1864 WOODMOOR DR., STE. 100
COLORADO SPRINGS, CO 80920
ATTN: JOE DESJARDIN
719-476-0800
JDESJARDIN@PROTERRACO.COM

J·R ENGINEERING
A Westrian Company
Centennial 303-740-9393 • Colorado Springs 719-593-2593
Fort Collins 970-491-9888 • www.jrengineering.com

No.	REVISION	BY	DATE

H-SCALE	1"=40'
V-SCALE	1"=8'
DATE	11/11/21
DESIGNED BY	XXX
DRAWN BY	CRB
CHECKED BY	

CLOVERLEAF FILING NO. 2

CURB RETURN PROFILES

SHEET 16 OF 20

JOB NO. 25158.01

X:\2510000.all\2515801\Drawings\Sheet Dwgs\SI02.dwg, SI01, 11/11/2023 11:51:45 AM, CS

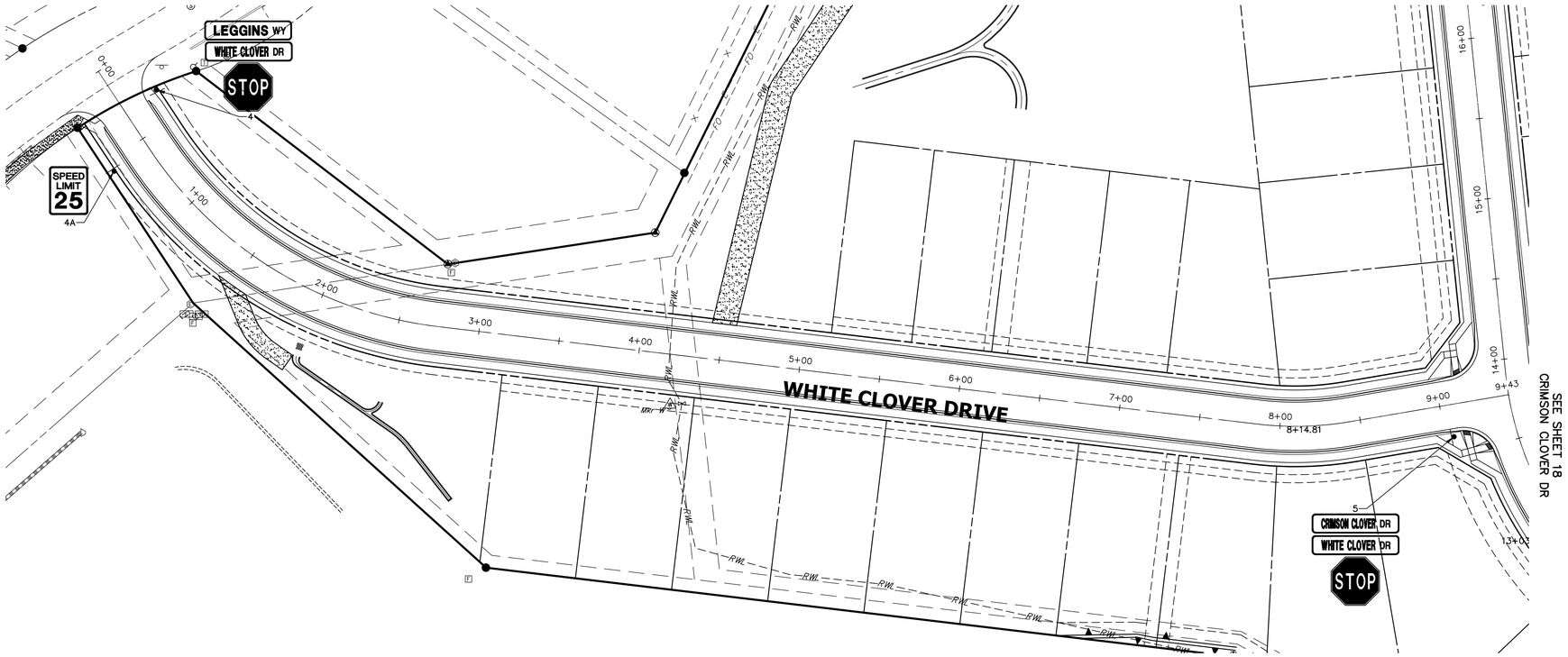

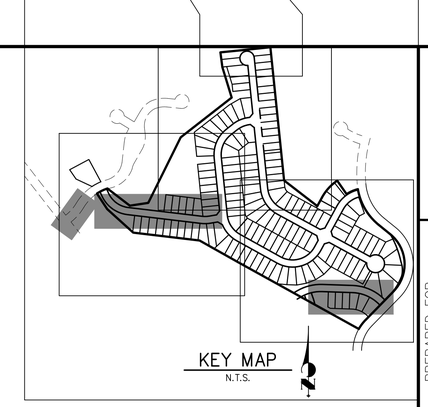

LEGGINGS WAY X-SECTION PROFILE
STA 0+00.00 TO 1+09.84

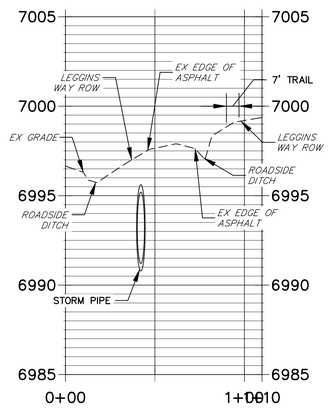

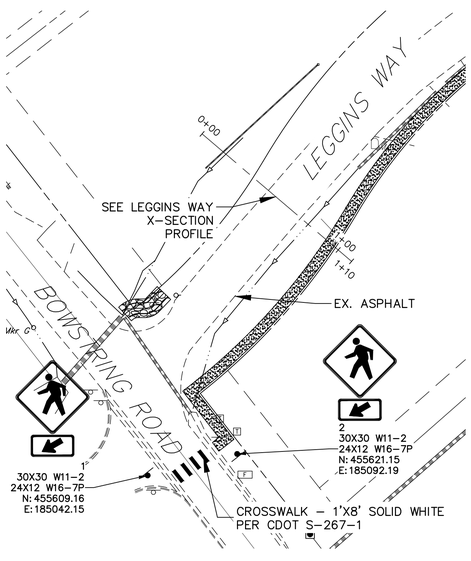

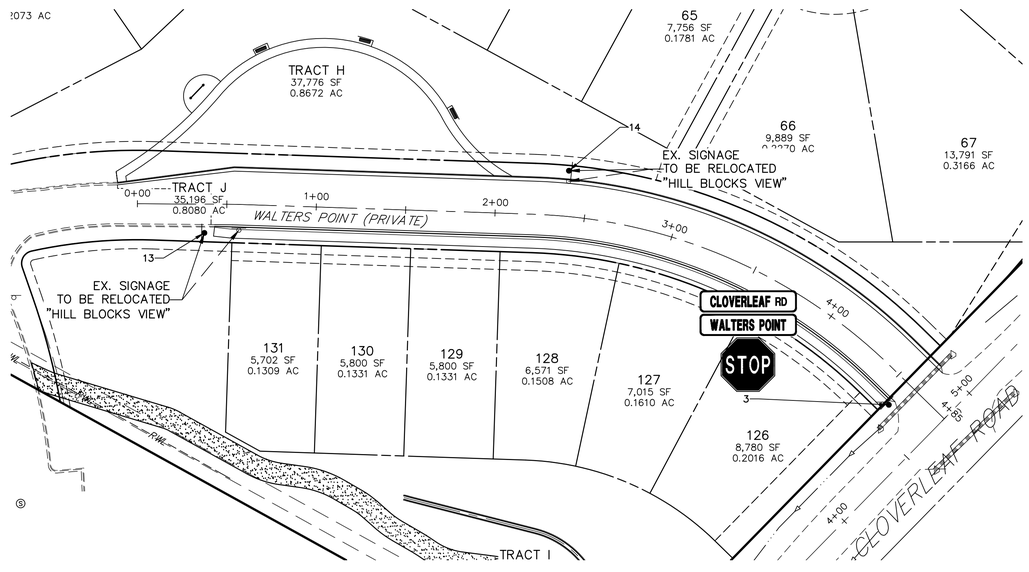

SIGN TABULATION					
POINT NUMBER	STATION	OFFSET	ALIGNMENT	NOTES	DESCRIPTION
3	4+57.82	16.08' (RT)	WALTERS POINT 2		30X30 R1-1 54X12 D3-1 (X4)
4	0+29.27	23.73' (LT)	WHITE CLOVER TERRACE		30X30 R1-1 54X12 D3-1 (X4)
4A	0+57.02	25.90' (RT)	WHITE CLOVER TERRACE		24X30 R2-1
5	9+05.59	20.03' (RT)	WHITE CLOVER TERRACE		30X30 R1-1 54X12 D3-1 (X4)
13	0+37.53	16.09' (RT)	WALTERS POINT 2		"HILL BLOCKS VIEW"
14	2+39.03	25.52' (LT)	WALTERS POINT 2		"HILL BLOCKS VIEW"

40 20 0 40 80

HORIZONTAL
ORIGINAL SCALE: 1" = 40'
VERTICAL
ORIGINAL SCALE: 1" = 4'

AS-BUILTS
05/24/2023
SF-2123

EPC PCD 1/31/22

Know what's below. Call before you dig.

ENGINEER'S STATEMENT

PREPARED UNDER MY DIRECT SUPERVISION AND ON BEHALF OF JR ENGINEERING

11/11/21

MIKE A. BRAMLETT, P.E.
COLORADO P.E. 32314
FOR AND ON BEHALF OF JR ENGINEERING, LLC

DATE

UNTIL SUCH TIME AS THESE DRAWINGS ARE APPROVED BY THE APPROPRIATE REVIEWING AGENCIES, JR ENGINEERING APPROVES THEIR USE ONLY FOR THE PURPOSES DESIGNATED BY WRITTEN AUTHORIZATION.

PREPARED FOR
MONUMENT HILL CM LLC
1864 WOODMOOR DR., STE. 100
COLORADO SPRINGS, CO 80920
ATTN: JOE DESJARDIN
719-476-0800
JDESJARDIN@PROTERRACO.COM

J·R ENGINEERING
A Westrian Company
Centennial 303-740-9393 • Colorado Springs 719-593-2593
Fort Collins 970-491-9888 • www.jrengineering.com

No.	REVISION	BY	DATE

H-SCALE	1"=40'
V-SCALE	N/A
DATE	11/11/21
DESIGNED BY	XXX
DRAWN BY	CRB
CHECKED BY	

CLOVERLEAF FILING NO. 2
SIGNAGE AND STRIPING PLAN

SHEET 17 OF 20

JOB NO. 25158.01

X:\2510000.all\2515801\Drawings\Sheet Dwgs\SG01.dwg, SG01, 11/11/2021 11:53:20 AM, CS

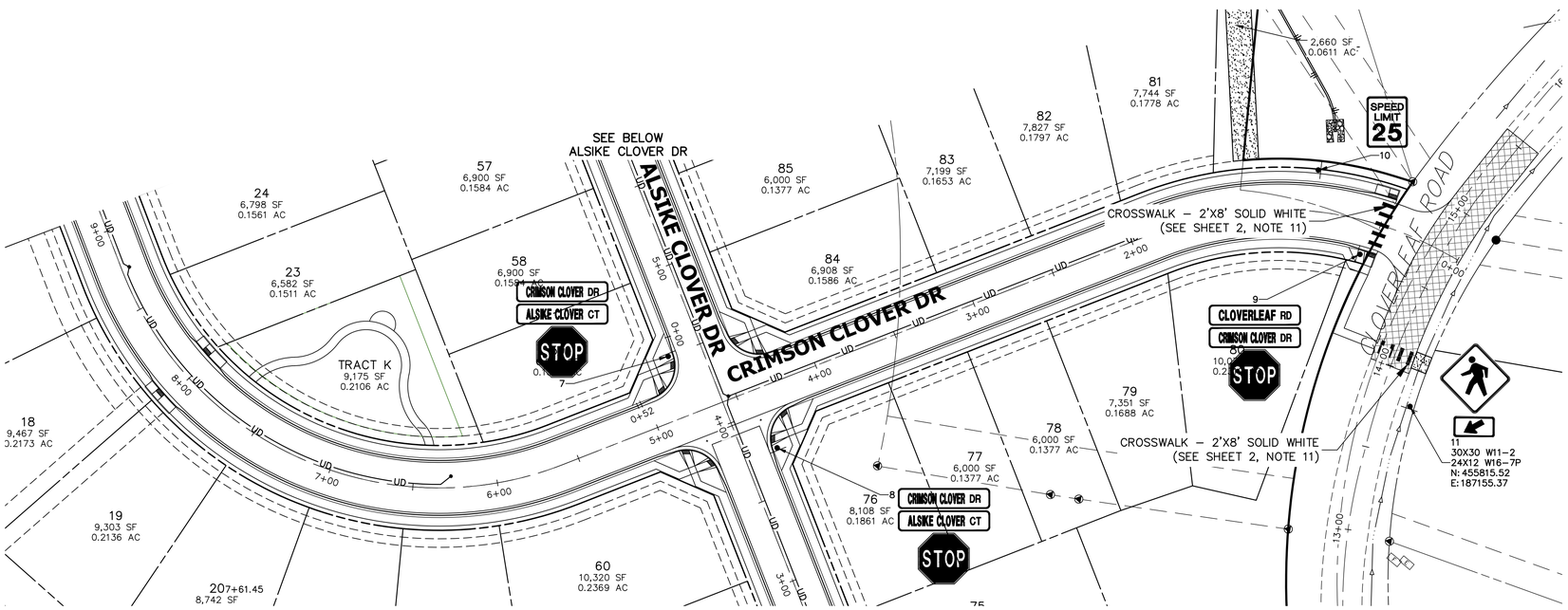

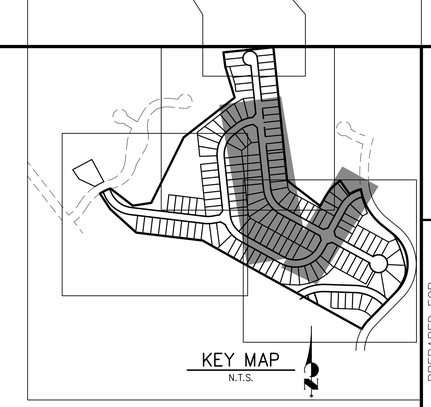

SIGN TABULATION					
POINT NUMBER	STATION	OFFSET	ALIGNMENT	NOTES	DESCRIPTION
6	21+89.03	19.86' (RT)	CRIMSON CLOVER DRIVE		30X30 R1-1 54X12 D3-1 (X4)
7	4+49.96	20.13' (LT)	ALSIKE CLOVER COURT		30X30 R1-1 54X12 D3-1 (X4)
8	3+76.35	19.98' (RT)	ALSIKE CLOVER COURT		30X30 R1-1 54X12 D3-1 (X4)
9	0+57.08	19.93' (LT)	CRIMSON CLOVER DRIVE		30X30 R1-1 54X12 D3-1 (X4)
10	0+90.05	24.50' (RT)	CRIMSON CLOVER DRIVE		24X30 R2-1

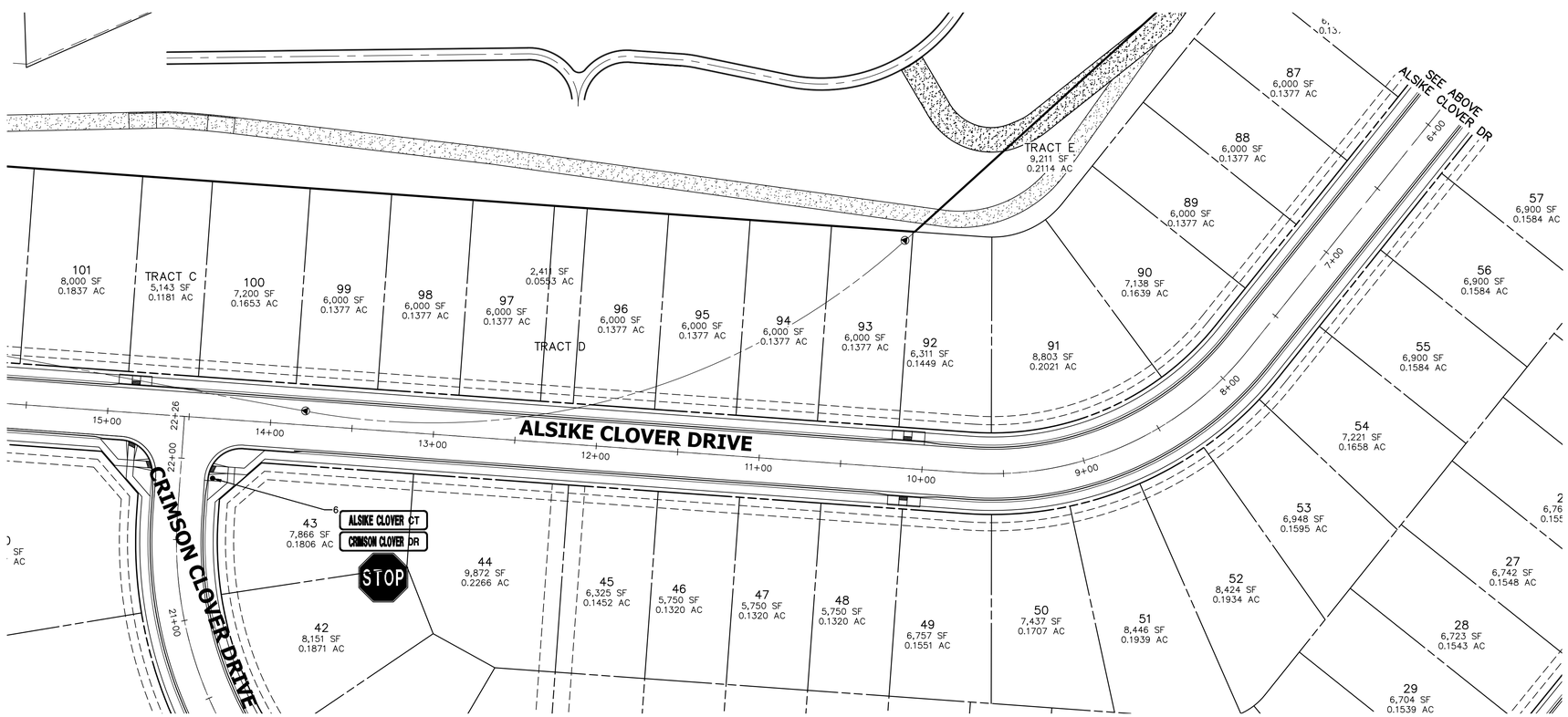

EPC PCD 1/31/22

AS-BUILTS
05/24/2023
SF-2123

Mike Bramlett
32314

40 20 0 40 80
ORIGINAL SCALE: 1" = 40'

811
Know what's below.
Call before you dig.

ENGINEER'S STATEMENT

PREPARED UNDER MY DIRECT SUPERVISION AND ON BEHALF OF JR ENGINEERING

11/11/21

MIKE A. BRAMLETT, P.E.
COLORADO P.E. 32314
FOR AND ON BEHALF OF JR ENGINEERING, LLC

DATE

UNTIL SUCH TIME AS THESE DRAWINGS ARE APPROVED BY THE APPROPRIATE REVIEWING AGENCIES, JR ENGINEERING APPROVES THEIR USE ONLY FOR THE PURPOSES DESIGNATED BY WRITTEN AUTHORIZATION.

PREPARED FOR
MONUMENT HILL CM LLC
1864 WOODMOOR DR., STE. 100
COLORADO SPRINGS, CO 80920
ATTN: JOE DESJARDIN
719-476-0800
JDESJARDIN@PROTERRACO.COM

J·R ENGINEERING
A Westrian Company
Centennial 303-740-9393 • Colorado Springs 719-593-2593
Fort Collins 970-491-9888 • www.jrengineering.com

No.	REVISION	BY	DATE

H-SCALE	1"=40'
V-SCALE	N/A
DATE	11/11/21
DESIGNED BY	XXX
DRAWN BY	CRB
CHECKED BY	

CLOVERLEAF FILING NO. 2

SIGNAGE AND STRIPING PLAN

SHEET 18 OF 20

JOB NO. 25158.01

X:\2510000.all\2515801\Drawings\Sheet Dwgs\SG01.dwg, SG02, 11/11/2021 11:53:36 AM, CS

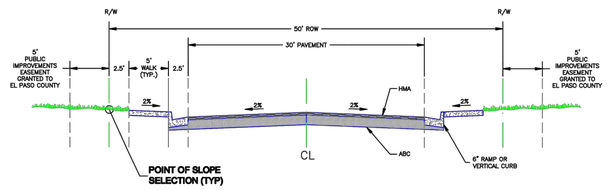

Roadway Design Parameters
Design Speed: 25 mph
Posted Speed: 25 mph
Maximum ADT: 3,000
Design Vehicle: WB-50

SCALE: NOT TO SCALE

12/31/05 DATE APPROVED: John A. McCarty DEPARTMENT OF TRANSPORTATION	Urban Local Roadway Standard Cross Section REVISION DATE: 12/22/05 FILE NAME: SD_2-2	EL PASO COUNTY DEPARTMENT OF TRANSPORTATION

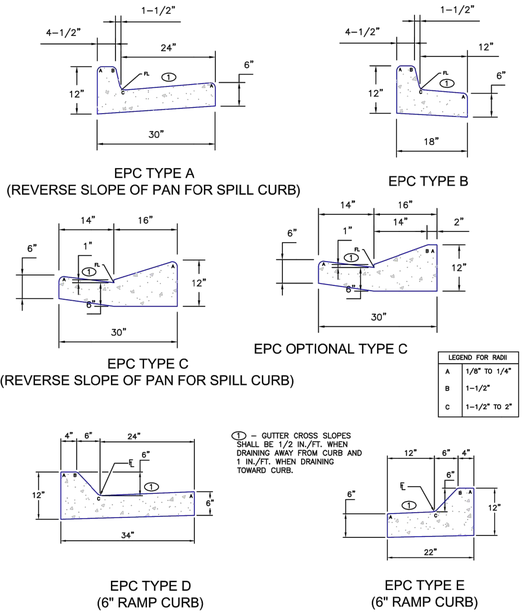

LEGEND FOR RADII	
A	1/8" TO 1/4"
B	1-1/2"
C	1-1/2" TO 2"

① – GUTTER CROSS SLOPES SHALL BE 1/2 IN./FT. WHEN DRAINING AWAY FROM CURB AND 1 IN./FT. WHEN DRAINING TOWARD CURB.

SCALE: NOT TO SCALE

8/11/11 DATE APPROVED: André P. Brackin DEPARTMENT OF TRANSPORTATION	Typical Curb and Gutter Details Standard Drawing REVISION DATE: 12/8/15 FILE NAME: SD_2-20	EL PASO COUNTY DEPARTMENT OF TRANSPORTATION

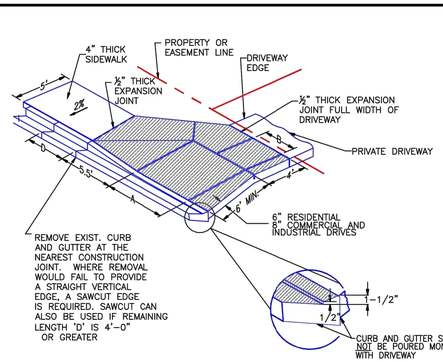

NOTES

1. PROVIDE CENTERLINE CONSTRUCTION OR TOOL JOINT WHEN DRIVEWAY WIDTH (EDGE TO EDGE) IS 14' OR GREATER.

2. ALL TOOL JOINTS SHALL BE A MINIMUM OF 1-½" DEEP.

3. WHEN REPLACING EXISTING CURB AND GUTTER WITH NEW DRIVEWAY, ENTIRE CURB AND GUTTER SECTION SHALL BE REMOVED AND REPLACED WITH CURB AND GUTTER (VARIABLE-CURB-HEIGHT) AS SHOWN. DO NOT BREAK CURB FROM GUTTER SECTION.

4. FLARED PORTION OF DRIVEWAY SHALL BE POURED MONOLITHIC WITH MAIN RECTANGULAR PORTION OF DRIVEWAY.

5. WHERE THERE IS MORE THAN ONE DRIVEWAY ON A LOT, THE SPACING OF THE DRIVEWAYS SHALL MEET REQUIREMENTS IN ECM.

6. WHERE AN EXISTING SIDEWALK IS IN PLACE, AND ITS THICKNESS IS LESS THAN 6" (RESIDENTIAL) OR 8" (COMMERCIAL AND INDUSTRIAL) THE SIDEWALK THROUGH THE DRIVEWAY SHALL BE REMOVED AND REPLACED WITH PORTLAND CEMENT CONCRETE AT THE REQUIRED THICKNESS.

7. WHEN A DRIVEWAY IS TO BE TAKEN OUT OF SERVICE, THE ENTIRE LENGTH OF CURB AND GUTTER SHALL BE REMOVED AND REPLACED WITH NEW CURB AND GUTTER MATCHING THE ABUTTING SECTIONS.

8. ALL PROVISIONS IN THE LAND DEVELOPMENT CODE SHALL BE MET, WITH REGARD TO MINIMUM SETBACK FROM INTERSECTION AND SIDE PROPERTY LINES, MINIMUM SPACING, MAXIMUM WIDTH, ETC.

TOOLS JOINT SPACING		
DRIVEWAY WIDTH	A	B
12'	6'	3'
14'	7'	3'-6"
16'	8'	4'
18'	9'	4'-6"
20'	10'	5'
22'	11'	5'-6"
24'	8'	4'
26'	8'-8"	4'-4"
28'	9'-4"	4'-8"
30'	10'	5'

SCALE: NOT TO SCALE

8/11/11 DATE APPROVED: André P. Brackin DEPARTMENT OF TRANSPORTATION	Driveway Detail With Attached Sidewalk Standard Drawing REVISION DATE: 11/10/04 FILE NAME: SD_2-24	EL PASO COUNTY DEPARTMENT OF TRANSPORTATION

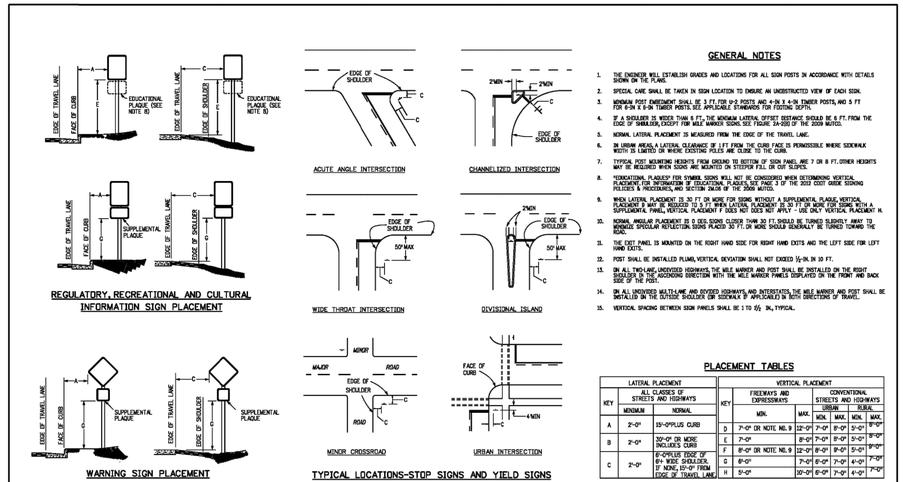

GENERAL NOTES

1. THE ENGINEER WILL ESTABLISH GRADES AND LOCATIONS FOR ALL SIGN POSTS IN ACCORDANCE WITH DETAILS SHOWN ON THE PLANS.
2. SPECIAL CARE SHALL BE TAKEN IN SIGN LOCATION TO ENSURE AN UNOBSTRUCTED VIEW OF EACH SIGN.
3. MINIMUM POST EMBEDMENT SHALL BE 3 FT.FOR U-2 POSTS AND 4-IN X 4-IN TIMBER POSTS,AND 5 FT FOR 6-IN X 6-IN TIMBER POSTS.SEE APPLICABLE STANDARDS FOR FOOTING DEPTH.
4. IF A SHOULDER IS WIDER THAN 8 FT,THE MINIMUM LATERAL OFFSET DISTANCE SHOULD BE 6 FT.FROM THE EDGE OF SHOULDER,EXCEPT FOR MILE MARKER SIGNS.SEE FIGURE 2A-205 OF THE 2009 MUTCD.
5. NORMAL LATERAL PLACEMENT IS MEASURED FROM THE EDGE OF THE TRAVEL LANE.
6. IN URBAN AREAS,A LATERAL CLEARANCE OF 1FT.FROM THE CURB FACE IS PERMISSIBLE WHERE SIDEWALK WIDTH IS LIMITED OR WHERE EXISTING POLES ARE CLOSE TO THE CURB.
7. TYPICAL POST MOUNTING HEIGHTS FROM GROUND TO BOTTOM OF SIGN PANEL,ARE 7 OR 8 FT.OTHER HEIGHTS MAY BE REQUIRED WHEN SIGNS ARE MOUNTED ON STEEPER FILL OR CUT SLOPES.
8. *EDUCATIONAL PLAQUES FOR STOPPER SIGNS WILL NOT BE CONSIDERED WHEN DETERMINING VERTICAL PLACEMENT FOR INFORMATION OF EDUCATIONAL PLAQUES,SEE PAGE 3 OF THE 2012 CDOT GUIDE SIGNING POLICIES & PROCEDURES,AND SECTION 2A.06 OF THE 2009 MUTCD.
9. WHEN LATERAL PLACEMENT IS 30 FT OR MORE FOR SIGNS WITHOUT A SUPPLEMENTAL PLAQUE,VERTICAL PLACEMENT 8 MAY BE REDUCED TO 5 FT.WHEN LATERAL PLACEMENT IS 30 FT OR MORE FOR SIGNS WITH A SUPPLEMENTAL PANEL,VERTICAL PLACEMENT 7 DOES NOT DOES NOT APPLY - USE ONLY VERTICAL PLACEMENT 14.
10. NORMAL ANGULAR PLACEMENT IS 0 DEG.SIGNS CLOSER THAN 50 FT.SHOULD BE TURNED SLIGHTLY AWAY TO REDUCE SPECULAR REFLECTION.SIGNS PLACED 30 FT.OR MORE SHOULD GENERALLY BE TURNED TOWARD THE ROAD.
11. THE EXIT PANEL IS MOUNTED ON THE RIGHT HAND SIDE FOR RIGHT HAND EXITS AND THE LEFT SIDE FOR LEFT HAND EXITS.
12. POST SHALL BE INSTALLED PLUMB,VERTICAL DEVIATION SHALL NOT EXCEED ½-IN IN 10 FT.
13. ON ALL TWO-LANE,UNDIVIDED HIGHWAYS,THE MILE MARKER AND POST SHALL BE INSTALLED ON THE RIGHT SIDE,PER IN THE ASCENDING DIRECTION WITH THE MILE MARKER PANELS DISPLAYED ON THE FRONT AND BACK SIDE OF THE POST.
14. ON ALL UNDIVIDED MULTI-LANE AND DIVIDED HIGHWAYS AND INTERSECTION THE MILE MARKER AND POST SHALL BE INSTALLED ON THE OUTSIDE SHOULDER OR SIDEWALK IF APPLICABLE,IN BOTH DIRECTIONS OF TRAVEL.
15. VERTICAL SPACING BETWEEN SIGN PANELS SHALL BE 1 TO 0½ IN.,TYPICAL.

PLACEMENT TABLES

LATERAL PLACEMENT		
KEY	ALL CLASSES OF STREETS AND HIGHWAYS	
	MINIMUM	NORMAL
A	2'-0"	12'-0"PLUS CURB
B	2'-0"	30'-0" OR MORE INCLUDES CURB
C	2'-0"	6'-0"PLUS EDGE OF 6'+ WIDE SHOULDER. IF NONE,12'-0" FROM EDGE OF TRAVEL LANE

VERTICAL PLACEMENT						
KEY	FREEWAYS AND EXPRESSWAYS		CONVENTIONAL STREETS AND HIGHWAYS			
			URBAN		RURAL	
	MIN.	MAX.	MIN.	MAX.	MIN.	MAX.
D	7'-0" OR NOTE NO. 9		12'-0"	7'-0"	8'-0"	5'-0"
E	7'-0"		8'-0"	7'-0"	8'-0"	5'-0"
F	8'-0" OR NOTE NO. 9		12'-0"	8'-0"	8'-0"	5'-0"
G	6'-0"		7'-0"	6'-0"	7'-0"	4'-0"
H	5'-0"		10'-0"	6'-0"	7'-0"	4'-0"

Computer File Information	
Creation Date: 07/04/12	
Created By: KCM	
Last Modification Date: 07/31/19	
Last Modified By: AVU	
CAD Ver.: MicroStation V8 Scale: Not to Scale Units: English	

Sheet Revisions	
Date	Comments

Colorado Department of Transportation
2829 W. Howard Pl.
Denver, CO 80204
Phone: 303-757-9436
FAX: 303-757-9219
Traffic & Safety Engineering MKB

GROUND SIGN PLACEMENT

Issued By: Traffic & Safety Engineering Branch July 31, 2019

STANDARD PLAN NO.
S-614-1
Standard Sheet No. 1 of 2
Project Sheet Number:

Crushed Limestone Trail Surfacing:

a. This item consists of supplying, placing and compacting crushed limestone surfacing on the existing base material and/or newly placed base course trail platform as described in project specifications, or as directed by the Engineer. This material is sometimes labeled as "crushed limestone", "Colorado white fines", or "breeze".
b. Crushed limestone surfacing shall consist of 3/8" minus crushed limestone to a compacted depth of 4" and meeting the following grading requirements:

• Sieve Size	% Passing
• Particle Size	% Passing
• 3/8"	100%
• #4	70 - 100%
• #8	45 - 70%
• #16	30 - 55%
• #30	20 - 45%
• #200	7 - 15%

c. The rock must be crushed into irregular and angular particles to allow interlocking into a tight matrix. The crushed rock must have adequate fines and some natural binders in order to cement the particles together after the fines are moistened, compacted, and allowed to dry. The fines, when laid to a depth of 4 inches, should bind to each other in a consolidated slab which is porous yet resistant to water falling on the surface. If the gradation of crusher fines does not meet the 7% passing the #200, clay fines may be added and mixed with the aggregate.
d. Crushed limestone surfacing shall be "dense grade" limestone. The material shall be uniform in quality and substantially free from extraneous material.
e. Limestone shall be placed with a method that provides a finished surface of evenly mixed material free from large pockets of separated rock.
f. Crushed limestone material shall be within +/- 2% of the optimum moisture content at time of compaction.
g. Crushed limestone shall be compacted by mechanical methods to 95% of Standard Proctor maximum dry density (per ASTM D698 or AASHTO T-99).

AS-BUILTS
05/24/2023
SF-2123

EPC PCD 1/31/22

Know what's below. Call before you dig.

ENGINEER'S STATEMENT

PREPARED UNDER MY DIRECT SUPERVISION AND ON BEHALF OF JR ENGINEERING

11/11/21
MIKE A. BRAMLETT, P.E. — DATE
COLORADO P.E. 32314
FOR AND ON BEHALF OF JR ENGINEERING, LLC

UNTIL SUCH TIME AS THESE DRAWINGS ARE APPROVED BY THE APPROPRIATE REVIEWING AGENCIES, JR ENGINEERING APPROVES THEIR USE ONLY FOR THE PURPOSES DESIGNATED BY WRITTEN AUTHORIZATION.

PREPARED FOR
MONUMENT HILL CM LLC
1864 WOODMOOR DR., STE. 100
COLORADO SPRINGS, CO 80920
ATTN: JOE DESJARDIN
719-476-0800
JDESJARDIN@PROTERRACO.COM

J·R ENGINEERING
A Westrian Company
Centennial 303-740-9393 • Colorado Springs 719-593-2593
Fort Collins 970-491-9888 • www.jrengineering.com

No.	REVISION	BY	DATE

H-SCALE	N/A
V-SCALE	N/A
DATE	11/11/21
DESIGNED BY	N/A
DRAWN BY	N/A
CHECKED BY	

CLOVERLEAF FILING NO. 2
COUNTY DETAILS

SHEET 19 OF 20
JOB NO. 25158.01

X:\2510000.all\2515801\Drawings\Sheet Dwgs\DT01.dwg, DT01, 1:1111/2021 11:54:43 AM, CS

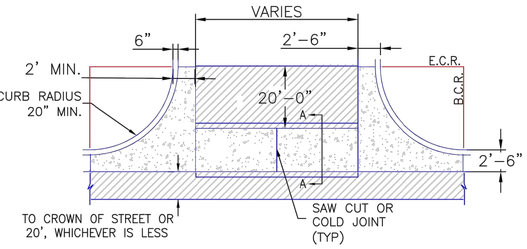

PLAN VIEW

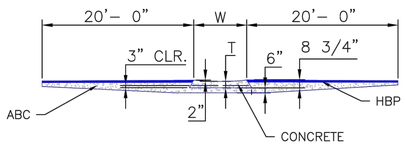

SECTION A–A

NOTES

1. W – WIDTH SHALL BE 6' FOR LOCAL, 8' FOR COLLECTORS, AND 10' FOR ARTERIAL ROADS.

2. T – SQUARED–OFF RETURN TO BE POURED MONOLITHICALLY, 8" PCC FOR LOCAL ROADS, 9" FOR COLLECTORS WITH 6x6 – 4.4 W.W.F. OR #4 REINFORCING BAR @ 18" EACH WAY.

3. = 3" MINIMUM ASPHALT DEPTH (2 LIFTS).

4. DESIGN TO SPECIFY ELEVATIONS AT PI AND PCR.

SCALE: NOT TO SCALE

8/11/11 DATE APPROVED: André P. Brackin DEPARTMENT OF TRANSPORTATION	Typical Cross Pan Layout Detail Standard Drawing REVISION DATE: 12/8/15 FILE NAME: SD_2–26	EL PASO COUNTY DEPARTMENT OF TRANSPORTATION

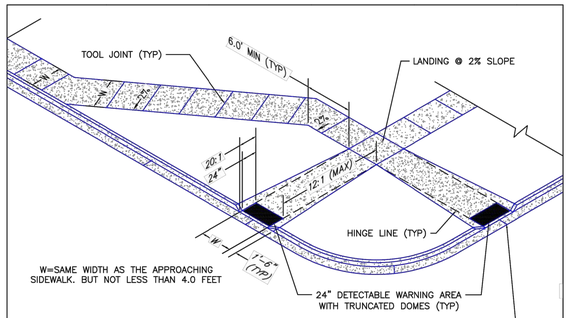

PEDESTRIAN RAMP NOTES

1. ALL WORK SHALL BE DONE IN ACCORDANCE WITH THE CURRENT ENGINEERING CRITERIA MANUAL AND ADA REQUIREMENTS.
2. CONTRACTOR TO NOTIFY ENGINEERING DIVISION INSPECTION STAFF 48 HOURS PRIOR TO CONCRETE PLACEMENT.
3. PEDESTRIAN RAMP CONSTRUCTION SHALL BE A MINIMUM 4,500 PSI CONCRETE, MINIMUM 4" THICK, NON–COLORED, NON–SCORED, COARSE BROOM FINISH.
4. RAMP LOCATION AND LENGTH MAY REQUIRE MODIFICATION TO MAINTAIN THE 12:1 MAXIMUM RUNNING RAMP SLOPE AND 20:1 DETECTABLE WARNING AREA DUE TO STREET INTERSECTION GRADES AND/OR ALIGNMENTS.
5. DETECTABLE WARNING AREA SHALL START A MINIMUM OF 6" BUT NOT MORE THAN 8" FROM THE FLOWLINE OF THE CURB AT ANY POINT.
6. DETECTABLE WARNING AREA SHALL BE PREFABRICATED, REDDISH INTEGRALLY COLORED, TRUNCATED–DOME, PAVERS. THERMOPLASTIC TRUNCATED DOMES WILL NOT BE ACCEPTED.
7. THE DETECTABLE WARNING AREA SHALL BE 24" IN LENGTH AND THE FULL WIDTH OF THE RAMP.
8. RAMP WIDTH REQUIRED IS SAME AS APPROACHING SIDEWALK; 4' MINIMUM.
9. ALL RAMPS WILL BE PERPENDICULAR TO TRAFFIC WITH THE EXCEPTION OF MID–BLOCK OR TERMINAL RAMPS WHICH MAY BE PARALLEL SUBJECT TO APPROVAL.
10. AVOID PLACING DRAINAGE STRUCTURES, TRAFFIC SIGNAL/SIGNAGE, UTILITIES/JUNCTION BOXES, OR OTHER OBSTRUCTIONS WITHIN PROPOSED RAMP AREAS.

GENERAL NOTES

1. WHERE THE 1'–6" FLARED SIDE(S) OF A PERPENDICULAR CURB RAMP IS (ARE) CONTIGUOUS WITH A PEDESTRIAN OR HARD SURFACE AREA, THE MAXIMUM FLARE SLOPE SHALL NOT EXCEED 10:1.
2. PEDESTRIAN WALKWAY AND/OR LOCATION OF EXISTING OR FUTURE PEDESTRIAN RAMPS ON OPPOSITE CORNERS SHALL BE REVIEWED BEFORE CONSTRUCTING NEW RAMPS.
3. AT MARKED PEDESTRIAN CROSSINGS, THE BOTTOM OF THE RAMPS, EXCLUSIVE OF THE FLARE SIDES, SHALL BE TOTALLY CONTAINED WITHIN THE MARKINGS.

7/9/09 DATE APPROVED: André P. Brackin DEPARTMENT OF TRANSPORTATION	Pedestrian Intersection Ramp Standard Drawing REVISION DATE: 12/8/15 FILE NAME: SD_2–41	EL PASO COUNTY DEPARTMENT OF TRANSPORTATION

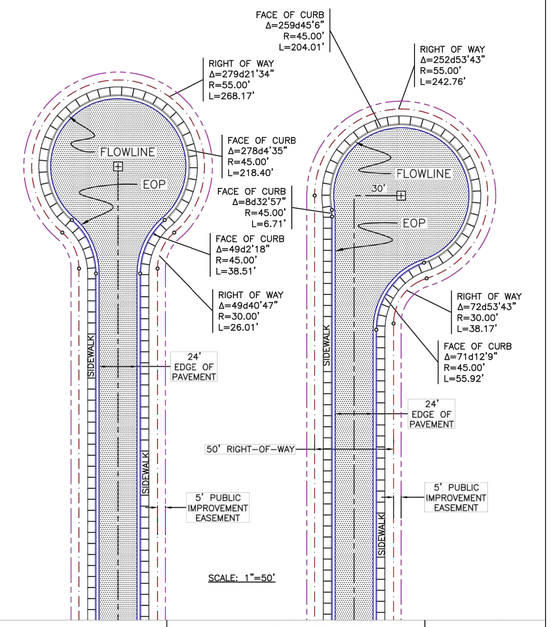

1/1/08 DATE APPROVED: John A. McCarty DEPARTMENT OF TRANSPORTATION	Urban Cul–De–Sac Details Standard Drawing REVISION DATE: 12/8/15 FILE NAME: SD_2–75	EL PASO COUNTY DEPARTMENT OF TRANSPORTATION

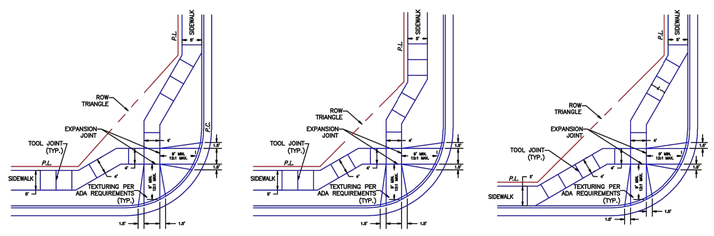

SCALE: NOT TO SCALE

9/16/10 DATE APPROVED: André P. Brackin DEPARTMENT OF TRANSPORTATION	Pedestrian Intersection Ramp Detail Standard Drawing REVISION DATE: 11/10/04 FILE NAME: SD_2–40	EL PASO COUNTY DEPARTMENT OF TRANSPORTATION

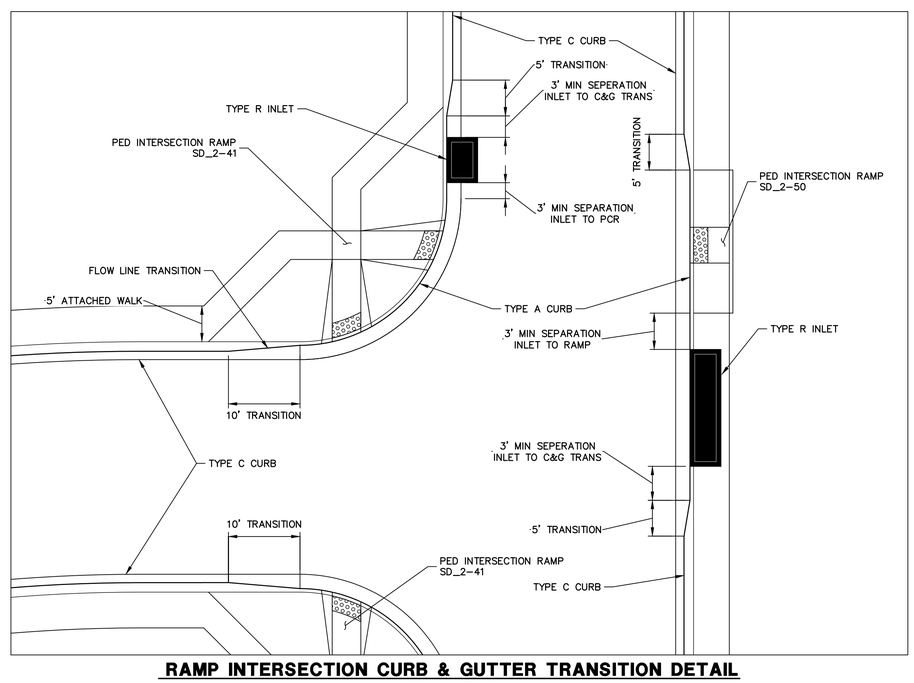

RAMP INTERSECTION CURB & GUTTER TRANSITION DETAIL

SCALE: 1"=10'

AS-BUILTS
05/24/2023
SF-2123

EPC PCD 1/31/22

Know what's below. Call before you dig.

ENGINEER'S STATEMENT

PREPARED UNDER MY DIRECT SUPERVISION AND ON BEHALF OF JR ENGINEERING

11/11/21
DATE

MIKE A. BRAMLETT, P.E.
COLORADO P.E. 32314
FOR AND ON BEHALF OF JR ENGINEERING, LLC

UNTIL SUCH TIME AS THESE DRAWINGS ARE APPROVED BY THE APPROPRIATE REVIEWING AGENCIES, JR ENGINEERING APPROVES THEIR USE ONLY FOR THE PURPOSES DESIGNATED BY WRITTEN AUTHORIZATION.

PREPARED FOR
MONUMENT HILL CM LLC
1864 WOODMOOR DR., STE. 100
COLORADO SPRINGS, CO 80920
ATTN: JOE DESJARDIN
719–476–0800
JDESJARDIN@PROTERRACO.COM

J·R ENGINEERING
A Westrian Company
Centennial 303–740–9393 • Colorado Springs 719–593–2593
Fort Collins 970–491–9888 • www.jrengineering.com

No.	REVISION	BY	DATE

H–SCALE	N/A
V–SCALE	N/A
DATE	11/11/21
DESIGNED BY	N/A
DRAWN BY	N/A
CHECKED BY	

CLOVERLEAF FILING NO. 2

COUNTY DETAILS

SHEET 20 OF 20

JOB NO. 25158.01

X:\2510000.all\2515801\Drawings\Sheet Dwgs\D701.dwg, D702, 11/11/2021 11:54:48 AM, CS