JDM CONSULTING, LLC

P.O. Box 26137, Colorado Springs, CO 80936
p. 719.251.5291 267.261.1825
e. daniel@jdmengineers.com jared@jdmengineers.com

Property Address:	17104 Goshawk Rd E,	Date:	October 7, 2020
	Colorado Springs, CO 80908	Job #:	20-181
Endorsement:	Jared R. Dumke, P.E.		

COLORADO LICENSED
JARED ROBERT DUMKE
54410
PROFESSIONAL ENGINEER
10/7/2020

Purpose of Investigation: To determine the subsurface suitably for an Onsite Wastewater Treatment System (OWTS) as well as outline design criteria for a future Soil Treatment Area (STA) through both visual and tactile evaluations of the onsite subsurface soil. The onsite evaluation and associated soil testing were conducted in compliance with the El Paso County Board of Health OWTS Regulations

Profile Pit Summary	
Profile Pit #1	
Lat:	**39° 4'36.23"N**
Long:	**104°38'2.15"W**
0 - 0'-6"	**Topsoil**
0'-6" - 3'-0"	**Soil Type 4**
3'-0" - 5'-0"	**Soil Type 2**
5'-0" - 6'-0"	**Soil Type 4**
6'-0" - 8'-0"	**Soil Type 4**
Profile Pit #2	
Lat:	**39° 4'36.48"N**
Long:	**104°38'2.77"W**
0 - 0'-6"	**Topsoil**
0'-6" - 6'-6"	**Soil Type 4**
6'-6" - 8'-0"	**Soil Type 3**
-	**-**
-	**-**
Existing Well (If applicable)	
Lat:	**N/A**
Long:	**N/A**

Profile Pit #1		Profile Pit #2	
	Topsoil		Topsoil
1'-0"	Soil Type 4	1'-0"	Soil Type 4
2'-0"		2'-0"	
3'-0"		3'-0"	
	Soil Type 2		
4'-0"		4'-0"	
5'-0"		5'-0"	
	Soil Type 4		
6'-0"		6'-0"	
	Soil Type 4		
7'-0"		7'-0"	Soil Type 3
8'-0"		8'-0"	
9'-0"		9'-0"	

Recommendations:

An Engineered On-Site Wastewater Treatment System (OWTS) will be required for this site due to: (a) Soil Type 4 identified in the treatment zone of Profile Pit #1 & Profile Pit #2. (b) Redoximorphic features (Ground water and/or constantly saturated soils) identified in the treatment zone of Profile Pit #1. Soil Type 4 (LTAR = 0.20, Treatment Level 1) will be the most restrictive soil in the treatment zone of the soil treatment area.

JDM CONSULTING, LLC

P.O. Box 26137, Colorado Springs, CO 80936
p. 719.251.5291 267.261.1825
e. daniel@jdmengineers.com jared@jdmengineers.com

Site Map:

JDM CONSULTING, LLC

P.O. Box 26137, Colorado Springs, CO 80936
p. 719.251.5291 267.261.1825
e. daniel@jdmengineers.com jared@jdmengineers.com

Job Number:	20-181	Test Pit#	Pit #1
Date of Evaluation:	October 5, 2020	Total Depth:	8'-0"
Evaluator:	D.Mizicko	STA Slope and Direction:	S @ ±5%
Excavator:	Down to Earth Excavating	Latitude:	39° 4'36.23"N
Equipment:	Mini Excavator	Longitude:	104°38'2.15"W

17104 Goshawk Rd E, 80908

Depth Below Grade	Sample Depth	USDA Soil texture	USDA Soil Structure - Type	USDA Soil Structure Grade	Soil Type	Redoximorphic Features Present (Y/N)
0 - 0'-6"	**Topsoil**					
0'-6" - 3'-0"	**2'-0"**	**Sandy Clay**	**Blocky**	**Strong**	**Soil Type 4**	**No**
3'-0" - 5'-0"	**4'-0"**	**Sandy Loam**	**Granular**	**Strong**	**Soil Type 2**	**No**
5'-0" - 6'-0"	**7'-0"**	**Silty Clay**	**Blocky**	**Strong**	**Soil Type 4**	**No**
6'-0" - 8'-0"	**-**	**Silty Clay**	**Blocky**	**Strong**	**Soil Type 4**	**Yes**

Total Depth =	**8'-0"**		
Groundwater Encountered?	**Yes**	If yes, what depth?	**6'-0"**
Bedrock Encountered?	**No**	If yes, what depth?	**-**
Is Dawson Arkose (DA) or Cemented Sands (CS) Present?			**No**
Is the material fractured and/or Jointed			**No**
If Yes, what is the cementation class?			
Is the Dawson Arkose or Cemented Sand a limiting layer?			**-**

Comments:

Redoximorphic features (Ground water and/or constantly saturated soils) identified in the profile pit at 6'-0" below grade.

JDM CONSULTING, LLC

P.O. Box 26137, Colorado Springs, CO 80936
p. 719.251.5291 267.261.1825
e. daniel@jdmengineers.com jared@jdmengineers.com

Job Number:	20-181	Test Pit#	Pit #2
Date of Evaluation:	October 5, 2020	Total Depth:	8'-0"
Evaluator:	D.Mizicko	STA Slope and Direction:	S @ ±5%
Excavator:	Down to Earth Excavating	Latitude:	39° 4'36.48"N
Equipment:	Mini Excavator	Longitude:	104°38'2.77"W

17104 Goshawk Rd E, 80908

Depth Below Grade	Sample Depth	USDA Soil texture	USDA Soil Structure - Type	USDA Soil Structure Grade	Soil Type	Redoximorphic Features Present (Y/N)
0 - 0'-6"	**Topsoil**					
0'-6" - 6'-6"	**-**	**Sandy Clay**	**Blocky**	**Strong**	**Soil Type 4**	**No**
6'-6" - 8'-0"	**7'-0"**	**Sandy Clay Loam**	**Granular**	**Moderate**	**Soil Type 3**	**No**
-	-	-	-	-	-	-
-	-	-	-	-	-	-

Total Depth =	**8'-0"**		Comments:
Groundwater Encountered?	**No**	If yes, what depth?	**-**
Bedrock Encountered?	**No**	If yes, what depth?	**-**
Is Dawson Arkose (DA) or Cemented Sands (CS) Present?			**No**
Is the material fractured and/or Jointed			**No**
If Yes, what is the cementation class?			
Is the Dawson Arkose or Cemented Sand a limiting layer?			**-**

JDM CONSULTING, LLC

P.O. Box 26137, Colorado Springs, CO 80936
p. 719.251.5291 267.261.1825
e. daniel@jdmengineers.com jared@jdmengineers.com

Job #: 20-181

Soil Treatment Area Calculations prepared for:

Edward & Deborah Ritchey- Property/Building Owner

10/19/2020

COLORADO LICENSED JARED ROBERT KUMKE 54410 PROFESSIONAL ENGINEER

Project Address:

17104 Goshawk Rd E, 80908

Tank Size & Design Flow

1000	Gallon Tank **(Existing; 48 Hour Usage Retention Min.)**
450	Wastewater Design Flow in GPD from maximum proposed occupancy (See Below)

Water Usage Disclaimer (*Design void if not signed*):

I _____ (property owner) certify that the proposed occupancy is accurate to the best of my knowledge. I understand that water usage may change over time and can have an effect on the functionality of the septic system designed by JDM Consulting, LLC. JDM Consulting, LLC Is not responsible for issues caused within the soil treatment area due to fluctuating water usage.

Signed: _____ Date: _____

Profile Evaluation

Reference Documents: Profile Evaluation by JDM *Consulting, LLC Dated: October 7, 2020* , Job # 20-181

Receiving Soil Type:	**Type 4**	
LTAR of Soil:	**0.2**	Gal/day/sq.ft.

Soil Treatment Area

Design Flow / LTAR = SF Required

2250	Sq.ft. *(Unadjusted)*
1575	Sq.Ft. *(Adjusted)*

Adjustment Factors (Table 10-2, 10-3)*

1.0	Application -	**Trench - Pressure Dosed**
0.7	Distribution Media -	**Chambers**
1.0	Diverter Valve Used -	**Yes**

**No Adjustments Allowed for Type R Soils*

# of Chambers - Arc 36 (15 sq.ft. per Chamber)

105	Minimum

# of Chambers - Quick 4 (12 sq.ft. per Chamber)

132	Minimum

JDM CONSULTING, LLC

P.O. Box 26137, Colorado Springs, CO 80936
p. 719.251.5291 267.261.1825
e. daniel@jdmengineers.com jared@jdmengineers.com

Proposed Building use and Occupancy

Wedding venue with a maximum occupancy of 90 guests. No Kitchen or onsite food preparation (i.e., no food prep or cleanup on site, caterers do everything offsite). No facilities onsite or future plans for overnight guests.

Design Flow rate

<u>Commercial Wastewater, Estimated Daily Wastewater Flow Rate:</u> Facilities with short-term or transient visitors. Examples: Airports or bus stations per passenger; fairgrounds per person attending; ball parks, race tracks, stadiums, theaters or auditoriums per seat.

Gallons/Day per Person =	**5**	***Gallons Per Day***
Max. Proposed Occupancy =	**90**	***Persons***
Total Daily flow rate =	**450**	***Gallons Per Day***

10/19/2020

1 01 - Vicinity Map
1" = 180'-0"

JDM CONSULTING, LLC
P.O. Box 26137, Colorado Springs, CO 80936
p. 719.251.5291 267.261.1825
e. daniel@jdmengineers.com jared@jdmengineers.com

17104 Goshawk Rd E, 80908

OWTS Design

Vicinity Map

Project number	20-181
Date	10/19/2020
Drawn by	D.MIZICKO
Checked by	J.DUMKE

C1 of 5

Scale 1" = 180'-0"

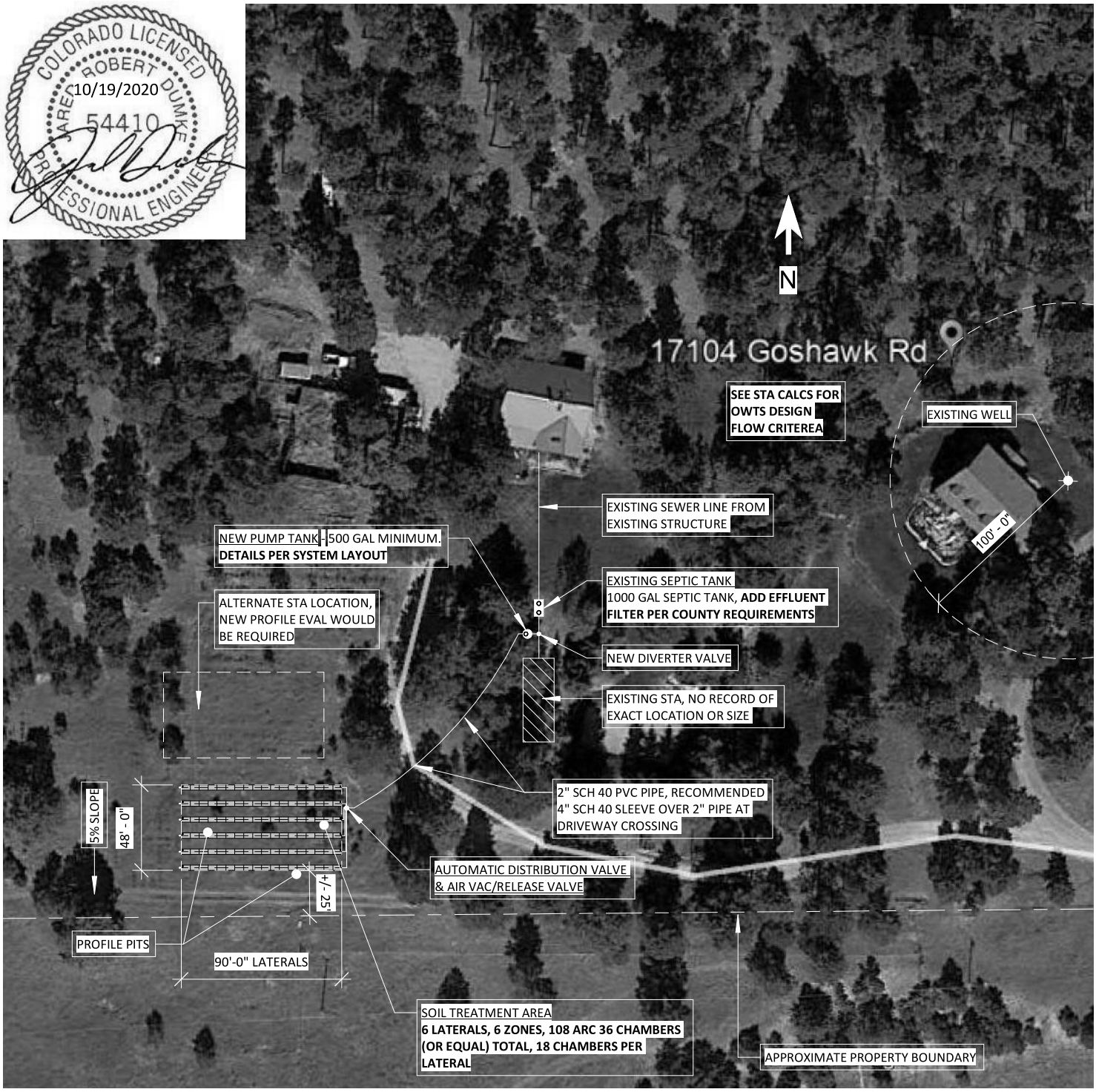

1 01- Site Plan
1" = 80'-0"

JDM CONSULTING, LLC
P.O. Box 26137, Colorado Springs, CO 80936
p. 719.251.5291 267.261.1825
e. daniel@jdmengineers.com jared@jdmengineers.com

17104 Goshawk Rd E, 80908

OWTS Design

Site Map

Project number	20-181	C2 of 5
Date	10/19/2020	
Drawn by	D.MIZICKO	
Checked by	J.DUMKE	Scale 1" = 80'-0"

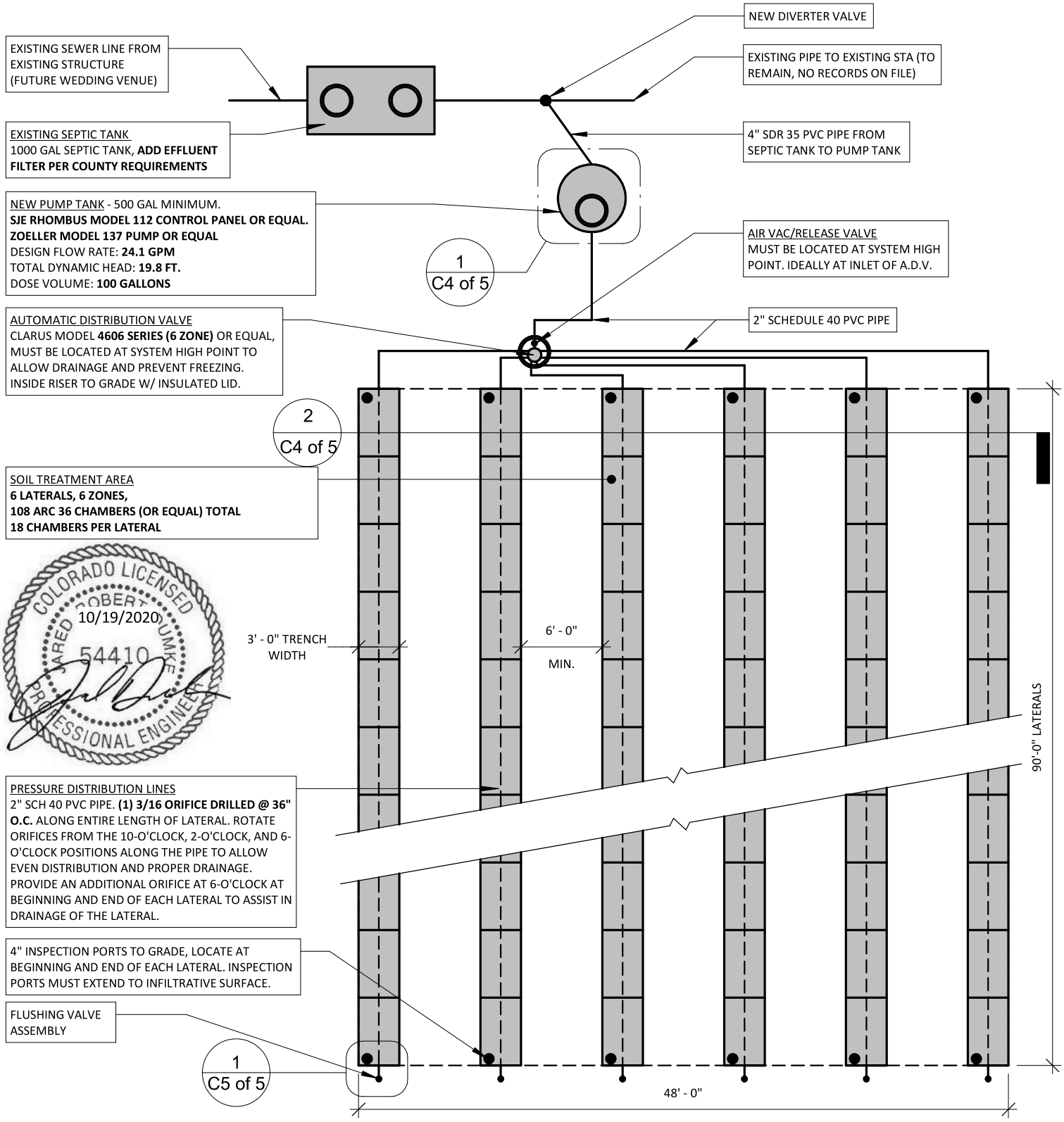

1 STA - 6 Row, Pressure Dosed, Trench
1" = 10'-0"

JDM CONSULTING, LLC
P.O. Box 26137, Colorado Springs, CO 80936
p. 719.251.5291 267.261.1825
e. daniel@jdmengineers.com jared@jdmengineers.com

17104 Goshawk Rd E, 80908

OWTS Design

System Layout

Project number	20-181	C3 of 5
Date	10/19/2020	
Drawn by	D.MIZICKO	
Checked by	J.DUMKE	Scale 1" = 10'-0"

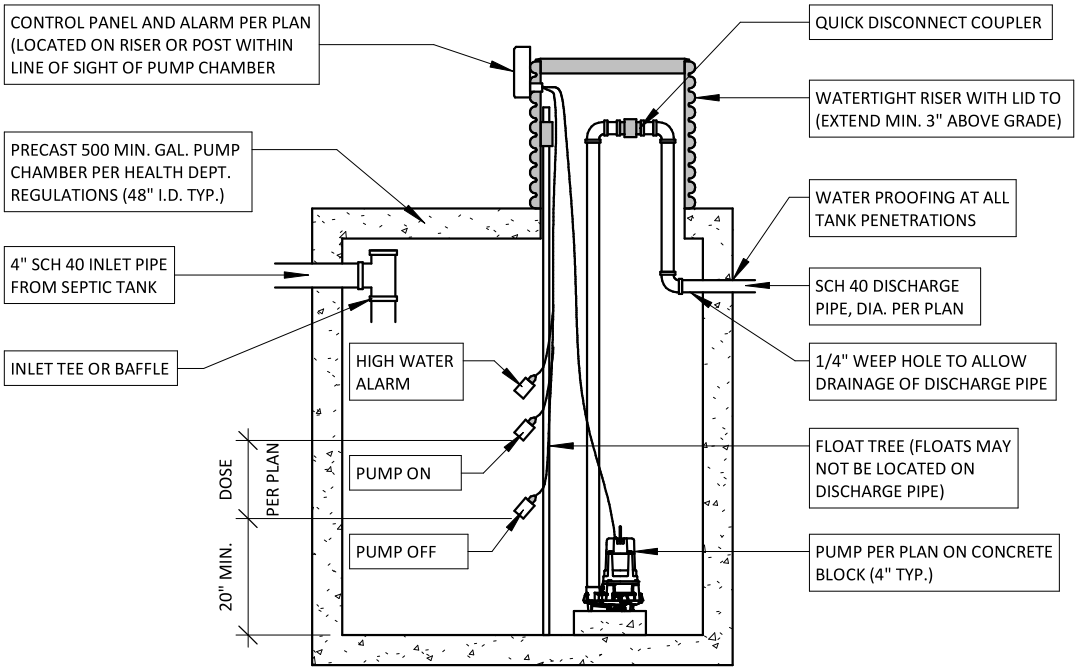

1 Pump Chamber
3/8" = 1'-0"

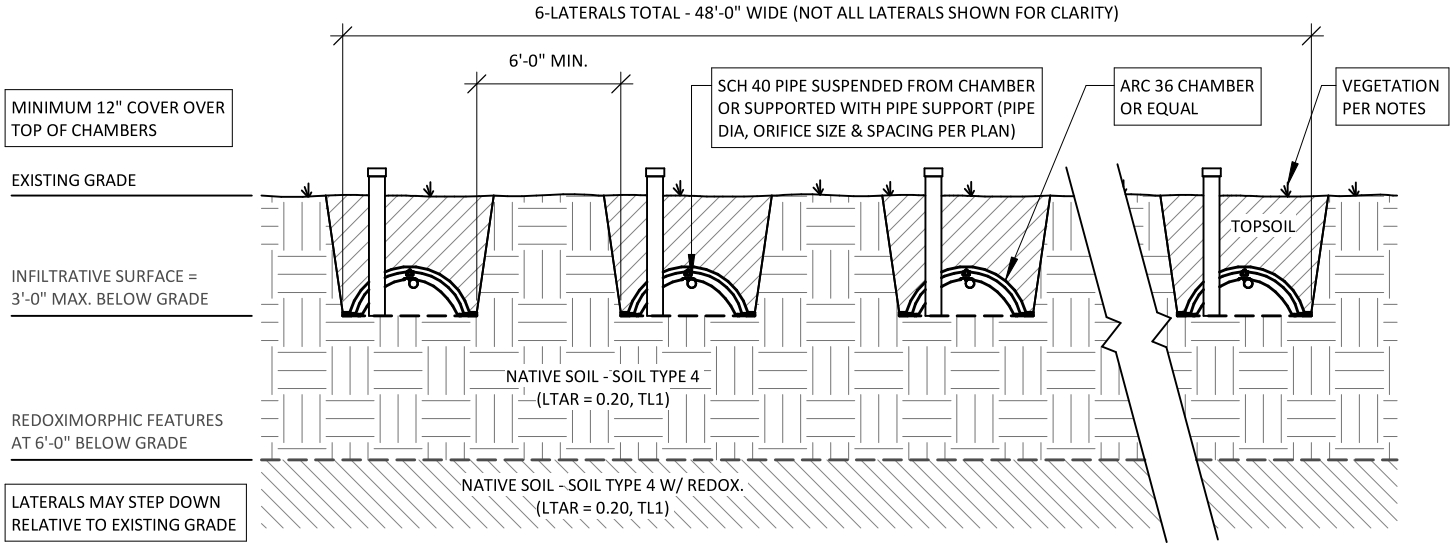

2 STA Section - 6-Row Trench, Pressure Dosed
1/4" = 1'-0"

JDM CONSULTING, LLC
P.O. Box 26137, Colorado Springs, CO 80936
p. 719.251.5291 267.261.1825
e. daniel@jdmengineers.com jared@jdmengineers.com

17104 Goshawk Rd E, 80908

OWTS Design

Sections

Project number	20-181
Date	10/19/2020
Drawn by	D.MIZICKO
Checked by	J.DUMKE

Scale As indicated

10/19/2020

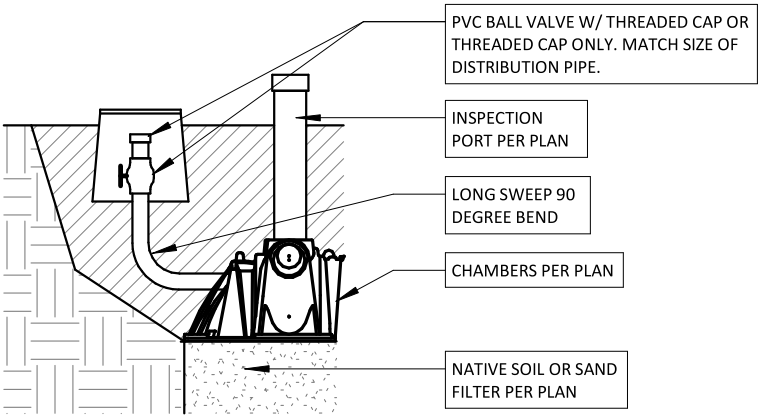

1 Flushing Assembly
1/2" = 1'-0"

OPERATION AND SYSTEM MAINTENANCE:
HOMEOWNERS ARE RESPONSIBLE FOR EDUCATING THEMSELVES ABOUT THE COMPONENTS AND OPERATION OF THEIR ONSITE WASTEWATER TREATMENT SYSTEM (OWTS) TO ENSURE THAT THE SYSTEM FUNCTIONS PROPERLY. HOMEOWNERS SHOULD BE ADVISED OF RECOMMENDED MAINTENANCE AND/OR SPECIAL CONSIDERATIONS (EFFLUENT FILTER, DIVERTER VALVES, PUMP CONTROL, INSPECTION PORTS, ETC) FOR THEIR SEPTIC SYSTEM. REFER TO THE EL PASO COUNTY PUBLIC HEATH DEPARTMENT OR YOUR LOCAL HEALTH DEPARTMENT AUTHORITY FOR MORE INFORMATION REGARDING SEPTIC SYSTEM CARE.
IT IS THE HOMEOWNERS RESPONSIBILITY TO PRACTICE WATER CONSERVATION AS MUCH AS PRACTICAL. REPAIR LEAKING FAUCETS AND TOILETS IMMEDIATELY. LEAKING PLUMBING FIXTURES CAN SATURATE AND ULTIMATELY FAIL A ONSITE WASTEWATER TREATMENT SYSTEM IN A VERY SHORT PERIOD OF TIME.

NOTES & LIMITATIONS:
ALL OWTS ELEMENTS MUST MAINTAIN A MINIMUM 10' FROM PROPERTY LINE.
ALL STA ELEMENTS MUST MAINTAIN A MINIMUM 100' SETBACK FROM THE WELL ONSITE (IF APPLICABLE) IN ADDITION TO ANY NEIGHBORING WELLS

THE DESIGN OF THIS SYSTEM HAS BEEN PREPARED IN ACCORDANCE WITH THE STANDARDS AND REGULATIONS OUTLINED BY THE EL PASO COUNTY HEALTH DEPARTMENT. ALL REGULATIONS APPLY TO THIS DESIGN INCLUDING BUT NOT LIMITED TO: PROPERTY LINE SETBACKS, PIPE CLEANOUTS, WELL SETBACKS, ETC. THIS DESIGN MUST BE COORDINATED WITH FINAL AS-CONSTRUCTED CONDITIONS ONSITE (FINAL ELEVATIONS, STRUCTURE LAYOUT, SITE GRADING, DRAINAGE, ETC.) PRIOR TO CONSTRUCTION. IF DURING CONSTRUCTION, UNFORESEEN CIRCUMSTANCES REQUIRE MODIFICATIONS TO THE DESIGN, JDM CONSULTING LLC. MUST BE NOTIFIED IMMEDIATELY TO RE-EVALUATE THE DESIGN. JDM CONSULTING LLC. SHALL NOT BE HELD LIABLE FOR DESIGN CHANGES AND/OR ADDITIONS TO THE DESIGN DUE TO UNFORESEEN CIRCUMSTANCES.

THIS DESIGN IS BASED OFF INFORMATION AVAILABLE AT THE TIME OF DESIGN AND CRITERIA DETERMINED BY THE PROFILE EVALUATION. SOIL CONDITIONS CAN VARY ACROSS AN STA, JDM CONSULTING, LLC. IS NOT RESPONSIBLE FOR VARYING SOIL CONDITIONS ONSITE. PERFORMANCE OF A SYSTEM IS HIGHLY VARIABLE DEPENDING ON HOMEOWNER WATER USE, DRAINAGE, HEAVY RAINFALL OR SNOWFALL, DEEP FREEZE, ETC. DUE TO THE AFOREMENTIONED VARIABLES, NO WARRANTY AGAINST FAILURE IS GIVEN OR IMPLIED BY JDM CONSULTING, LLC.

(HOMEOWNER) RE-ESTABLISH VEGETATION OVER SOIL TREATMENT AREA AS SOON AS POSSIBLE AFTER INSTALLATION. HOWEVER, NO IRRIGATION IS ALLOWED ON SOIL TREATMENT AREA. NATIVE GRASSES AND PLANTS WITH SHALLOW ROOT SYSTEMS ARE RECOMMENDED. CONTACT SOIL CONSERVATION SERVICE OR COUNTY EXTENSION AGENT FOR INFORMATION REGARDING NATIVE VEGETATION.

NO VEHICULAR TRAFFIC OR LIVESTOCK SHOULD BE PERMITTED ON THE SOIL TREATMENT AREA. WITH LAWN CARE EQUIPMENT, SUCH AS A RIDING LAWN MOWER OR TRACTOR, IT IS IMPORTANT NOT TO TRAVEL ON THE SOIL TREATMENT AREA WHEN THE SOIL IS SATURATED. WINTER TRAFFIC ON THE MOUND SHOULD ALSO BE AVOIDED TO MINIMIZE FROST PENETRATION IN COLDER CLIMATE AREAS AND TO MINIMIZE COMPACTION IN OTHER AREAS.

ALL ONSITE DRAINAGE (INCLUDING GUTTERS, DOWNSPOUTS, ETC.) MUST BE DIVERTED TO AVOID THE SOIL TREATMENT AREA.

JDM CONSULTING, LLC
P.O. Box 26137, Colorado Springs, CO 80936
p. 719.251.5291 267.261.1825
e. daniel@jdmengineers.com jared@jdmengineers.com

17104 Goshawk Rd E, 80908

OWTS Design

Details & Notes

Project number	20-181	C5 of 5
Date	10/19/2020	
Drawn by	D.MIZICKO	
Checked by	J.DUMKE	Scale As indicated

Engineering Properties

This table gives the engineering classifications and the range of engineering properties for the layers of each soil in the survey area.

Hydrologic soil group is a group of soils having similar runoff potential under similar storm and cover conditions. The criteria for determining Hydrologic soil group is found in the National Engineering Handbook, Chapter 7 issued May 2007(http://directives.sc.egov.usda.gov/OpenNonWebContent.aspx?content=17757.wba). Listing HSGs by soil map unit component and not by soil series is a new concept for the engineers. Past engineering references contained lists of HSGs by soil series. Soil series are continually being defined and redefined, and the list of soil series names changes so frequently as to make the task of maintaining a single national list virtually impossible. Therefore, the criteria is now used to calculate the HSG using the component soil properties and no such national series lists will be maintained. All such references are obsolete and their use should be discontinued. Soil properties that influence runoff potential are those that influence the minimum rate of infiltration for a bare soil after prolonged wetting and when not frozen. These properties are depth to a seasonal high water table, saturated hydraulic conductivity after prolonged wetting, and depth to a layer with a very slow water transmission rate. Changes in soil properties caused by land management or climate changes also cause the hydrologic soil group to change. The influence of ground cover is treated independently. There are four hydrologic soil groups, A, B, C, and D, and three dual groups, A/D, B/D, and C/D. In the dual groups, the first letter is for drained areas and the second letter is for undrained areas.

The four hydrologic soil groups are described in the following paragraphs:

Group A. Soils having a high infiltration rate (low runoff potential) when thoroughly wet. These consist mainly of deep, well drained to excessively drained sands or gravelly sands. These soils have a high rate of water transmission.

Group B. Soils having a moderate infiltration rate when thoroughly wet. These consist chiefly of moderately deep or deep, moderately well drained or well drained soils that have moderately fine texture to moderately coarse texture. These soils have a moderate rate of water transmission.

Group C. Soils having a slow infiltration rate when thoroughly wet. These consist chiefly of soils having a layer that impedes the downward movement of water or soils of moderately fine texture or fine texture. These soils have a slow rate of water transmission.

Group D. Soils having a very slow infiltration rate (high runoff potential) when thoroughly wet. These consist chiefly of clays that have a high shrink-swell potential, soils that have a high water table, soils that have a claypan or clay layer at or near the surface, and soils that are shallow over nearly impervious material. These soils have a very slow rate of water transmission.

Depth to the upper and lower boundaries of each layer is indicated.

Texture is given in the standard terms used by the U.S. Department of Agriculture. These terms are defined according to percentages of sand, silt, and clay in the fraction of the soil that is less than 2 millimeters in diameter. "Loam," for example, is soil that is 7 to 27 percent clay, 28 to 50 percent silt, and less than 52 percent sand. If the content of particles coarser than sand is 15 percent or more, an appropriate modifier is added, for example, "gravelly."

Classification of the soils is determined according to the Unified soil classification system (ASTM, 2005) and the system adopted by the American Association of State Highway and Transportation Officials (AASHTO, 2004).

The Unified system classifies soils according to properties that affect their use as construction material. Soils are classified according to particle-size distribution of the fraction less than 3 inches in diameter and according to plasticity index, liquid limit, and organic matter content. Sandy and gravelly soils are identified as GW, GP, GM, GC, SW, SP, SM, and SC; silty and clayey soils as ML, CL, OL, MH, CH, and OH; and highly organic soils as PT. Soils exhibiting engineering properties of two groups can have a dual classification, for example, CL-ML.

The AASHTO system classifies soils according to those properties that affect roadway construction and maintenance. In this system, the fraction of a mineral soil that is less than 3 inches in diameter is classified in one of seven groups from A-1 through A-7 on the basis of particle-size distribution, liquid limit, and plasticity index. Soils in group A-1 are coarse grained and low in content of fines (silt and clay). At the other extreme, soils in group A-7 are fine grained. Highly organic soils are classified in group A-8 on the basis of visual inspection.

If laboratory data are available, the A-1, A-2, and A-7 groups are further classified as A-1-a, A-1-b, A-2-4, A-2-5, A-2-6, A-2-7, A-7-5, or A-7-6. As an additional refinement, the suitability of a soil as subgrade material can be indicated by a group index number. Group index numbers range from 0 for the best subgrade material to 20 or higher for the poorest.

Percentage of rock fragments larger than 10 inches in diameter and 3 to 10 inches in diameter are indicated as a percentage of the total soil on a dry-weight basis. The percentages are estimates determined mainly by converting volume percentage in the field to weight percentage. Three values are provided to identify the expected Low (L), Representative Value (R), and High (H).

Percentage (of soil particles) passing designated sieves is the percentage of the soil fraction less than 3 inches in diameter based on an ovendry weight. The sieves, numbers 4, 10, 40, and 200 (USA Standard Series), have openings of 4.76, 2.00, 0.420, and 0.074 millimeters, respectively. Estimates are based on laboratory tests of soils sampled in the survey area and in nearby areas and on estimates made in the field. Three values are provided to identify the expected Low (L), Representative Value (R), and High (H).

Liquid limit and *plasticity index* (Atterberg limits) indicate the plasticity characteristics of a soil. The estimates are based on test data from the survey area or from nearby areas and on field examination. Three values are provided to identify the expected Low (L), Representative Value (R), and High (H).

References:

American Association of State Highway and Transportation Officials (AASHTO). 2004. Standard specifications for transportation materials and methods of sampling and testing. 24th edition.

American Society for Testing and Materials (ASTM). 2005. Standard classification of soils for engineering purposes. ASTM Standard D2487-00.

Report—Engineering Properties

Absence of an entry indicates that the data were not estimated. The asterisk '*' denotes the representative texture; other possible textures follow the dash. The criteria for determining the hydrologic soil group for individual soil components is found in the National Engineering Handbook, Chapter 7 issued May 2007(http://directives.sc.egov.usda.gov/OpenNonWebContent.aspx?content=17757.wba). Three values are provided to identify the expected Low (L), Representative Value (R), and High (H).

Engineering Properties–El Paso County Area, Colorado														
Map unit symbol and soil name	Pct. of map unit	Hydrologic group	Depth	USDA texture	Classification		Pct Fragments		Percentage passing sieve number—				Liquid limit	Plasticity index
					Unified	AASHTO	>10 inches	3-10 inches	4	10	40	200		
			In				*L-R-H*	*L-R-H*	*L-R-H*	*L-R-H*	*L-R-H*	*L-R-H*	*L-R-H*	*L-R-H*
25—Elbeth sandy loam, 3 to 8 percent slopes														
Elbeth	85	B	0-3	Sandy loam	SC, SC-SM	A-2-4, A-4	0- 0- 0	0- 0- 0	85-93-100	80-90-100	50-60-70	25-33-40	25-28-30	5-8 -10
			3-23	Loamy sand	SM	A-2-4, A-1	0- 0- 0	0- 0- 0	85-93-100	80-90-100	40-58-75	15-23-30	20-23-25	NP-3 -5
			23-68	Sandy clay loam	CL-ML, SC, SC-SM	A-2, A-4, A-6	0- 0- 0	0- 0- 0	85-93-100	80-90-100	65-78-90	30-43-55	25-30-35	5-10-15
			68-74	Sandy clay loam	CL, SC	A-2, A-4	0- 0- 0	0- 0- 0	85-93-100	80-90-100	50-70-90	25-40-55	25-28-30	5-8 -10

Engineering Properties–El Paso County Area, Colorado														
Map unit symbol and soil name	Pct. of map unit	Hydrologic group	Depth	USDA texture	Classification		Pct Fragments		Percentage passing sieve number—				Liquid limit	Plasticity index
					Unified	AASHTO	>10 inches	3-10 inches	4	10	40	200		
			In				*L-R-H*	*L-R-H*	*L-R-H*	*L-R-H*	*L-R-H*	*L-R-H*	*L-R-H*	*L-R-H*
92—Tomah-Crowfoot loamy sands, 3 to 8 percent slopes														
Tomah	50	B	0-10	Loamy sand	SM	A-2-4	0- 0- 0	0- 0- 0	100-100-100	100-100-100	50-60-70	15-23-30	20-23-25	NP-3 -5
			10-22	Coarse sand	SP-SM, SW-SM	A-1, A-2, A-3	0- 0- 0	0- 0- 0	100-100-100	100-100-100	45-55-65	5- 8- 10	—	NP
			22-48	Stratified coarse sand to sandy clay loam	SC, SM, SP-SM, SC-SM	A-2-4, A-1, A-4	0- 0- 0	0- 0- 0	85-93-100	80-90-100	35-63-90	5-28- 50	20-25-30	NP-5-10
			48-60	Coarse sand, loamy coarse sand	SC-SM, SM, SP-SM	A-2-4, A-1, A-3	0- 0- 0	0- 0- 0	85-93-100	80-90-100	35-53-70	5-15- 25	20-23-25	NP-3 -5
Crowfoot	30	B	0-12	Loamy sand	SM	A-2-4, A-1	0- 0- 0	0- 5- 10	85-93-100	80-90-100	40-58-75	15-23-30	20-23-25	NP-3 -5
			12-23	Sand	SM, SP-SM	A-1, A-2, A-3	0- 0- 0	0- 5- 10	85-93-100	80-90-100	40-55-70	5-10- 15	—	NP
			23-36	Sandy clay loam	CL-ML, SC, SC-SM	A-2-4, A-4, A-6	0- 0- 0	0- 5- 10	85-93-100	80-90-100	65-78-90	30-43-55	25-30-35	5-10-15
			36-60	Coarse sand, loamy coarse sand	SM, SP-SM	A-1, A-2	0- 0- 0	0- 5- 10	85-93-100	80-90-100	35-53-70	5-15- 25	—	NP

Data Source Information

Soil Survey Area: El Paso County Area, Colorado
Survey Area Data: Version 18, Jun 5, 2020

Map Scale: 1:2,800 if printed on A landscape (11" x 8.5") sheet.

N

Meters: 0 40 80 160 240

Feet: 0 100 200 400 600

Map projection: Web Mercator Corner coordinates: WGS84 Edge tics: UTM Zone 13N WGS84

MAP LEGEND

Area of Interest (AOI)

Area of Interest (AOI)

Soils

Soil Rating Polygons

Very limited

Somewhat limited

Not limited

Not rated or not available

Soil Rating Lines

Very limited

Somewhat limited

Not limited

Not rated or not available

Soil Rating Points

Very limited

Somewhat limited

Not limited

Not rated or not available

Water Features

Streams and Canals

Transportation

Rails

Interstate Highways

US Routes

Major Roads

Local Roads

Background

Aerial Photography

MAP INFORMATION

The soil surveys that comprise your AOI were mapped at 1:24,000.

Warning: Soil Map may not be valid at this scale.

Enlargement of maps beyond the scale of mapping can cause misunderstanding of the detail of mapping and accuracy of soil line placement. The maps do not show the small areas of contrasting soils that could have been shown at a more detailed scale.

Please rely on the bar scale on each map sheet for map measurements.

Source of Map: Natural Resources Conservation Service
Web Soil Survey URL:
Coordinate System: Web Mercator (EPSG:3857)

Maps from the Web Soil Survey are based on the Web Mercator projection, which preserves direction and shape but distorts distance and area. A projection that preserves area, such as the Albers equal-area conic projection, should be used if more accurate calculations of distance or area are required.

This product is generated from the USDA-NRCS certified data as of the version date(s) listed below.

Soil Survey Area: El Paso County Area, Colorado
Survey Area Data: Version 18, Jun 5, 2020

Soil map units are labeled (as space allows) for map scales 1:50,000 or larger.

Date(s) aerial images were photographed: Sep 8, 2018—May 26, 2019

The orthophoto or other base map on which the soil lines were compiled and digitized probably differs from the background imagery displayed on these maps. As a result, some minor shifting of map unit boundaries may be evident.

Septic Tank Absorption Fields

Map unit symbol	Map unit name	Rating	Component name (percent)	Rating reasons (numeric values)	Acres in AOI	Percent of AOI
25	Elbeth sandy loam, 3 to 8 percent slopes	Very limited	Elbeth (85%)	Slow water movement (1.00)	13.5	33.6%
92	Tomah-Crowfoot loamy sands, 3 to 8 percent slopes	Very limited	Tomah (50%)	Seepage, bottom layer (1.00)	26.6	66.4%
				Slow water movement (0.50)		
			Crowfoot (30%)	Seepage, bottom layer (1.00)		
				Slow water movement (0.50)		
Totals for Area of Interest					**40.1**	**100.0%**

Rating	Acres in AOI	Percent of AOI
Very limited	40.1	100.0%
Totals for Area of Interest	**40.1**	**100.0%**

Description

Septic tank absorption fields are areas in which effluent from a septic tank is distributed into the soil through subsurface tiles or perforated pipe. Only that part of the soil between depths of 24 and 60 inches is evaluated. The ratings are based on the soil properties that affect absorption of the effluent, construction and maintenance of the system, and public health. Saturated hydraulic conductivity (Ksat), depth to a water table, ponding, depth to bedrock or a cemented pan, and flooding affect absorption of the effluent. Stones and boulders, ice, and bedrock or a cemented pan interfere with installation. Subsidence interferes with installation and maintenance. Excessive slope may cause lateral seepage and surfacing of the effluent in downslope areas.

Some soils are underlain by loose sand and gravel or fractured bedrock at a depth of less than 4 feet below the distribution lines. In these soils the absorption field may not adequately filter the effluent, particularly when the system is new. As a result, the ground water may become contaminated.

The ratings are both verbal and numerical. Rating class terms indicate the extent to which the soils are limited by all of the soil features that affect the specified use. "Not limited" indicates that the soil has features that are very favorable for the specified use. Good performance and very low maintenance can be expected. "Somewhat limited" indicates that the soil has features that are moderately favorable for the specified use. The limitations can be overcome or minimized by special planning, design, or installation. Fair performance and moderate maintenance can be expected. "Very limited" indicates that the soil has one or more features that are unfavorable for the specified use. The limitations generally cannot be overcome without major soil reclamation, special design, or expensive installation procedures. Poor performance and high maintenance can be expected.

Numerical ratings indicate the severity of individual limitations. The ratings are shown as decimal fractions ranging from 0.01 to 1.00. They indicate gradations between the point at which a soil feature has the greatest negative impact on the use (1.00) and the point at which the soil feature is not a limitation (0.00).

The map unit components listed for each map unit in the accompanying Summary by Map Unit table in Web Soil Survey or the Aggregation Report in Soil Data Viewer are determined by the aggregation method chosen. An aggregated rating class is shown for each map unit. The components listed for each map unit are only those that have the same rating class as listed for the map unit. The percent composition of each component in a particular map unit is presented to help the user better understand the percentage of each map unit that has the rating presented.

Other components with different ratings may be present in each map unit. The ratings for all components, regardless of the map unit aggregated rating, can be viewed by generating the equivalent report from the Soil Reports tab in Web Soil Survey or from the Soil Data Mart site. Onsite investigation may be needed to validate these interpretations and to confirm the identity of the soil on a given site.

Rating Options

Aggregation Method: Dominant Condition

Component Percent Cutoff: None Specified

Tie-break Rule: Higher