Final Drainage Report

Dancing Wolf Estates Replat (DWE IV)

PCD File No. PUD-18-002, VR-182

Sandee C. Miller, P.E.
Red River Civil Engineering, Inc.
P.O. Box 535
Peyton, CO 80831
719-649-6126

November 8, 2020

Red River Civil Engineering, Inc.
P.O. Box 535
Peyton, CO 80831
719-649-6126

Drainage Letter Report for Dancing Wolf Estates (DWE) IV Replat

Design Engineer's Statement:

The attached drainage plan and report were prepared under my direction and supervision and are correct to the best of my knowledge and belief. Said drainage report has been prepared according to the criteria established by the County for drainage reports and said report is in conformity with the applicable master plan of the drainage basin. I accept responsibility for any liability caused by any negligent acts, errors or omissions on my part in preparing this report.

Sandee Miller, P.E. #35741 — Date: 11-8-2020

COLORADO REGISTERED PROFESSIONAL ENGINEER SANDEE CHRISTINA MILLER 35741

Owner/Developer's Statement:

I, the owner/developer have read and will comply with all of the requirements specified in this drainage report and plan.

David & Alyce McElhoes, Developer — Date: 12 Dec 2020
16605 Dancing Wolf Way, Colorado Springs, CO 80908

El Paso County:

Filed in accordance with the requirements of the Drainage Criteria Manual, Volumes 1 and 2, El Paso County Engineering Criteria Manual and Land Development Code as amended.

Jennifer Irvine, P.E.
County Engineer / ECM Administrator

APPROVED
Engineering Department
01/11/2021 12:14:19 PM
dsdnijkamp
EPC Planning & Community Development Department

Conditions:

Red River Civil Engineering, Inc.
P.O. Box 535
Peyton, CO 80831
719-649-6126

November 8, 2020
El Paso County Planning & Community Development
2880 International Circle, Suite 110
Colorado Springs, CO 80910-3127

RE: Drainage Letter for Dancing Wolf Estates (DWE) Replat (VR182)

The site of the subject project is at the northeast corner of State Highway 83 and Hodgen Road, as depicted on the vicinity map in the Appendix, within the SE ¼ of Section 22, T11S, R66W, 6th P.M., El Paso County, Colorado. The entire property is just over 40 acres. Ground cover consists of mostly native grasses with some trees on the north and east sides of the property, and soil in the area is mostly loamy sand and sandy loam. There are three predominant soils as listed in the NRCS Soils Resource Report found in the Appendix, all of which are in Hydrologic Soils Group B and are well-drained. The site slopes generally east and west toward a surface drainage way interior to the property that flows south to north. The drainage way ultimately exits the property on the north property line, and from there continues under SH 83 and ultimately to Cherry Creek and the South Platte River. The site is on FEMA map 0800590285F, which indicates it is in Zone X outside of the 500 year floodplain (see Appendix for map).

The property is currently subdivided into approximately 5 acre lots. The applicant desires to further subdivide some lots into approximately 2.5 to 3 acre lots. When the property was originally platted, the applicant was instructed to outline a no-build area along the existing drainage way. The no-build area was simply drawn along the existing topography without drainage calculations to support the required location or width of the no-build area. The current no-build area within Lot 2 of DWE IV is very close to the existing house, and takes up over half of the lot, so it is desired to take as much land out of the no-build as possible during the replat, while maintaining an adequate drainage way for the 100-year storm runoff. The northern border of Lot 2 is the driveway area for Lot 3 DWE IV. In order to determine an appropriate no-build area for Lot 2, the requirement for culverts under the future driveway to Lots 3 and 4 of DWE IV must be determined so that the headwater elevation south of the driveway and culverts can be calculated. Since this headwater will be just downstream of the Lot 2 boundary, its elevation will dictate the location of an acceptable no-build area in Lot 2. **In summary, the purpose of this drainage letter is to provide a drainage analysis for the vacation/replat, showing that it will not negatively impact existing drainageways or infrastructure. A main component is to determine an acceptable revised no-build area boundary for Lot 2 DWE IV, so that the revision can be recorded with the replat. The report will analyze the subdivision's impacts and required mitigation.**

Existing 10-year and 100-year storm runoff flows are taken from data in the original drainage report and exhibit for the development, titled "Final Drainage Report, Dancing Wolf Estates" by Phil Weinert Engineering in July, 1996. See excerpts from this report for your reference in the Appendix. The runoff calculations in the original report are very conservative because they used the runoff coefficient for 1-acre lots in the calculation. For this reason, additional runoff is not introduced by subdividing the 5 acre single family residential lots into 2.5 to 3 acre single family residential lots. Additional runoff is introduced by analyzing Lot 1 as a commercial lot, which

apparently was not done in the original analysis. See Appendix for the original runoff calculations and the supporting drainage map with design point discharges, as well as new hydrology calculations for Lots 1-3 and hydraulic calculations for the Lot 3 and 4 culvert design.

Drainage hydraulic calculations for this report consist of sizing culverts under the future driveway to Lots 3 and 4 to convey, at a minimum, the 10 year storm runoff. The culverts and driveway are then analyzed for the 100-year storm to ensure the runoff detained behind the driveway embankment which ultimately overtops the driveway does not affect habitable structures and is contained within the proposed no-build area. The proposed culverts are at the newly designated Design Point 5 on the Drainage Map in the Appendix. The total discharge at design point 5 is determined by adding the discharges of Design Points 1, 3 and 4 (from original drainage report), plus the runoff from the west side of the drainage way which consists of DWE IV Lots 1-3. See new runoff calculations for Lots 1-3 on the Rational Method Spreadsheet, as well as the total runoff for the driveway culvert design. Total runoff for Design Point 5 is calculated as Q10=189.49 cfs, Q100=411.78 cfs.

The culvert size and analysis for Lots 3 and 4 was computed using Bentley CulvertMaster. Two 48-inch culverts are required to convey the runoff while keeping the headwater below the proposed no-build boundary in Lot 2 of DWE IV. After trial and error, the analysis of the 100-year flow was conducted with the maximum allowable headwater set to an elevation of 7502, which corresponds with the proposed no-build boundary on the east side of Lot 2 of DWE IV. This maximum headwater elevation is achieved with a driveway crest elevation (the low point above the culverts) of 7501 for a distance of 40’, assuming a 36’ wide driveway embankment.

The culvert design is restricted by the location of the existing drainage way and lot boundaries, and the existing slopes of the drainage way. The velocity and Froude numbers of the discharge at the culverts dictates a riprap lined channel. The riprap was designed using the UDFCD spreadsheet, which requires a d50 = 24 inch riprap, 41’ long and 27’ wide, upstream and downstream of the culverts. Upstream and downstream inverts for the 50-feet long double 48” CMP culverts are 7495 and 7493.5, respectively.

The proposed revisions to the no-build area for Lot 2 of DWE IV are shown on the Replat document. These revisions allow slightly more “available” land in the Lot, which is extensively covered by the no-build area. The Lots 3 and 4 culvert and driveway design described in this drainage letter make the revision acceptable. When the first of Lots 3 and 4 are developed, the two 48-inch culverts could be redesigned to a different type of structure as long as the structure conveys the runoff and does not create headwater elevations in excess of 7502 within Lot 2.

Existing Ponds:
There are two existing ponds on the property. These are dry retention ponds. The property is analyzed assuming these ponds provide no detention or water quality control volume (WQCV). There is no applicable pond maintenance agreement or operations and maintenance manual and none is required with this vacation and replat.

Proposed Ponds:
There are no proposed ponds with this vacation and replat. DWE IV Lots 2-7 are single family residential of 2.5 acres or more, which means they do not require WQCV. Lot 1 is already platted as a commercial lot, and will require a drainage analysis at the time the site development plan is submitted to determine requirements for both WQCV and detention.

Existing and proposed conditions of the DWE IV Lots 2-7 were analyzed for additional runoff generated by replatting from four lots to six lots. See calculations in the Appendix. The results of the analysis are as follows:

- An increase in 10-year runoff from DWE IV lots of 1.62 cfs, equating to 0.8% of total runoff of 203 cfs
- An increase in 100-year runoff from DWE IV lots of 2.92 cfs, equating to 0.66% cfs of total runoff of 442 cfs

The increase in runoff due to replatting four lots into six lots is negligible compared to the existing runoff. The engineering recommendation based on this data is that detention is not required for this replat.

Four-Step Process:
The Four-Step Process for selecting structural BMPs, which is outlined in the El Paso County Engineering Criteria Manual, Appendix I, was considered during the evaluation of existing and proposed conditions for this project. The County requires the Four Step Process for receiving water protection that focuses on reducing runoff volumes, stabilizing drainage ways, treating the WQCV, and implementing special BMPs where needed. Implementation of the Four Step Process helps to achieve stormwater permit requirements. The process is applied to this project as follows:

1. *Employ Runoff Reduction Practices:*
    a. Conserve Existing Features & Minimize Impacts: This large lot development will disturb as little land area as possible to construct the new homes and access to the homes. The drainage channel will be disturbed only where needed to provide crossings for access driveways. Proposed runoff reduction on the site is achieved by platting large lots that will provide overland flow across grassy areas, which slows down runoff and promotes infiltration
    b. Minimize Directly Connected Impervious Areas (MDCIA): Runoff from impervious improvements on each lot will flow overland through grassy or landscaped areas before reaching the drainage swales. Drainage is not routed to additional impervious areas.
2. *Stabilize Drainageways:* The existing drainage channel is well vegetated and stabilized, and will be disturbed only where needed to provide crossings for access driveways. Where it is disturbed, it will be stabilized by riprap at pipe ends as needed, and revegetating slopes with seeding and erosion control blanket.
3. *Provide Water Quality Capture Volume (WQCV):* According to ECM Appendix I Section 1.7.1.B.5, permanent BMPs to treat the WQCV are not required for single family residential lots 2.5 acres and larger. Water quality must be addressed during construction, if necessary, with temporary erosion and sediment control BMPs on each single family lot, until the disturbed area has achieved final stabilization. Since Lot 1 is a proposed commercial lot, WQCV treatment is required. The on-site WQCV requirements for Lot 1 will be determined with the associated drainage report for the future site development plan application.

4. *Consider Need for Industrial and Commercial BMPs:* No specialized BMPs are needed for this large lot, rural residential development.

Drainage Fees:
This development is located within the West Cherry Creek drainage basin. At this time, West Cherry Creek is not included in the El Paso County Drainage Basin Fee program; therefore, no drainage or bridge fees are due at time of plat recording.

Conclusion:
This vacation replat will not have negative drainage impacts to the surrounding properties. All single family residential lots are 2.5 acres or larger, which provides adequate open space for drainage, and does not require water quality or detention ponds. When Lot 1 is developed, specific infrastructure will be designed in accordance with El Paso County's Drainage Criteria to mitigate the effects of the amount of impervious area proposed on the lot.

Sincerely,

Sandee C. Miller, P.E.
Colorado Professional Engineer 35741

APPENDIX:

- Vicinity Map
- FEMA Floodplain Map
- NRCS Soils Resource Report
- Hydrology Calculations:
  - Calculations from Original Drainage Report
  - Table of Runoff Coefficients "C" from Original Drainage Report
  - Calculation of Runoff for Dancing Wolf Estates IV Lots 1-3: Historic & Proposed Hydrology (for Design Point 5 Driveway Culvert Design)
  - Calculation of Runoff for Dancing Wolf Estates IV Lots 2-7: Historic & Proposed Hydrology (for determination of runoff increase and whether detention is required)
  - Table 6-6: 2020 Runoff Coefficients "C"
- Hydraulic Calculations:
  - Proposed Culverts at Design Point 5, 10-year Discharge
  - Proposed Culverts at Design Point 5, 100-year Discharge
  - Riprap Size Calculation Upstream & Downstream of Design Point 5 Culverts
- Drainage Plan

Google Maps Dancing Wolf Estates Vicinity Map

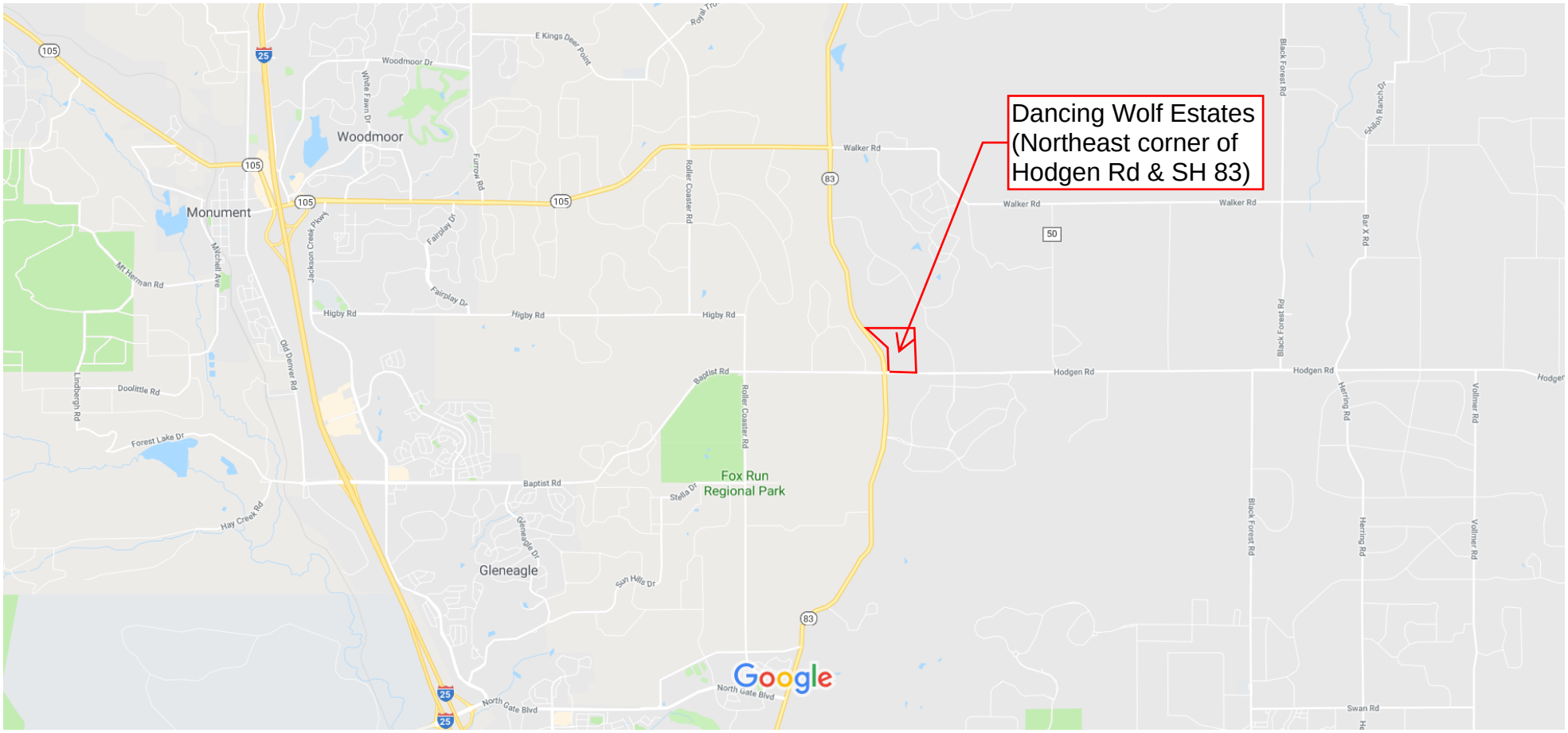

Map data ©2018 Google 1 mi

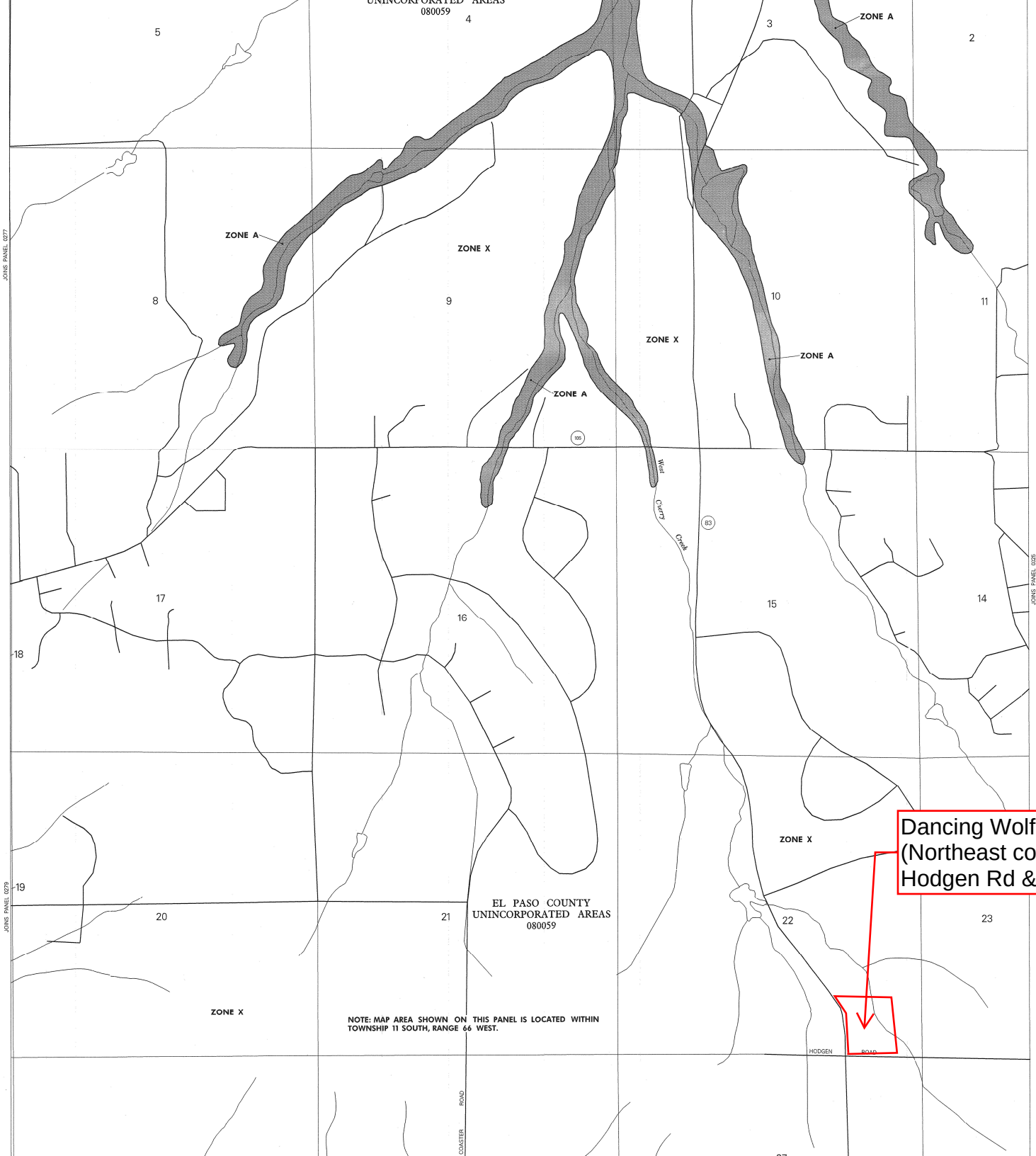

ZONE V Coastal flood with velocity hazard (wave action); no base flood elevations determined.

ZONE VE Coastal flood with velocity hazard (wave action); base flood elevations determined.

FLOODWAY AREAS IN ZONE AE

OTHER FLOOD AREAS

ZONE X Areas of 500-year flood; areas of 100-year flood with average depths of less than 1 foot or with drainage areas less than 1 square mile; and areas protected by levees from 100-year flood.

OTHER AREAS

ZONE X Areas determined to be outside 500-year floodplain.

ZONE D Areas in which flood hazards are undetermined.

UNDEVELOPED COASTAL BARRIERS

Identified 1983 — Identified 1990 — Otherwise Protected Areas

Coastal barrier areas are normally located within or adjacent to Special Flood Hazard Areas.

Flood Boundary

Floodway Boundary

Zone D Boundary

Boundary Dividing Special Flood Hazard Zones, and Boundary Dividing Areas of Different Coastal Base Flood Elevations Within Special Flood Hazard Zones.

513 — Base Flood Elevation Line; Elevation in Feet. See Map Index for Elevation Datum.

D — Cross Section Line

(EL 987) — Base Flood Elevation in Feet Where Uniform Within Zone. See Map Index for Elevation Datum.

RM7 — Elevation Reference Mark

M2 — River Mile

97°07'30", 32°22'30" — Horizontal Coordinates Based on North American Datum of 1927 (NAD 27) Projection.

NOTES

This map is for use in administering the National Flood Insurance Program; it does not necessarily identify all areas subject to flooding, particularly from local drainage sources of small size, or all planimetric features outside Special Flood Hazard Areas.

Coastal base flood elevations apply only landward of 0.0 NGVD, and include the effects of wave action; these elevations may also differ significantly from those developed by the National Weather Service for hurricane evacuation planning.

Areas of Special Flood Hazard (100-year flood) include Zones A, AE, AH, AO, A99, V, and VE.

Certain areas not in Special Flood Hazard Areas may be protected by flood control structures.

Boundaries of the floodways were computed at cross sections and interpolated between cross sections. The floodways were based on hydraulic considerations with regard to requirements of the Federal Emergency Management Agency.

Floodway widths in some areas may be too narrow to show to scale. Floodway widths are provided in the Flood Insurance Study Report.

This map may incorporate approximate boundaries of Coastal Barrier Resource System Units and /or Otherwise Protected Areas established under the Coastal Barrier Improvement Act of 1990 (PL 101-591).

Corporate limits shown are current as of the date of this map. The user should contact appropriate community officials to determine if corporate limits have changed subsequent to the issuance of this map.

For community map revision history prior to countywide mapping, see Section 6.0 of the Flood Insurance Study Report.

For adjoining map panels and base map source see separately printed Map Index.

MAP REPOSITORY
Refer to Repository Listing on Map Index

EFFECTIVE DATE OF
COUNTYWIDE FLOOD INSURANCE RATE MAP:
MARCH 17, 1997

EFFECTIVE DATE(S) OF REVISION(S) TO THIS PANEL:

Refer to the FLOOD INSURANCE RATE MAP EFFECTIVE DATE shown on this map to determine when actuarial rates apply to structures in zones where elevations or depths have been established.

To determine if flood insurance is available, contact an insurance agent or call the National Flood Insurance Program at (800) 638-6620.

N

APPROXIMATE SCALE IN FEET
1000 0 1000

NATIONAL FLOOD INSURANCE PROGRAM

FIRM
FLOOD INSURANCE RATE MAP

EL PASO COUNTY,
COLORADO AND
INCORPORATED AREAS

PANEL 285 OF 1300
(SEE MAP INDEX FOR PANELS NOT PRINTED)

CONTAINS: COMMUNITY	NUMBER	PANEL	SUFFIX
EL PASO COUNTY, UNINCORPORATED AREAS	080059	0285	F

United States Department of Agriculture

NRCS

Natural Resources Conservation Service

A product of the National Cooperative Soil Survey, a joint effort of the United States Department of Agriculture and other Federal agencies, State agencies including the Agricultural Experiment Stations, and local participants

Custom Soil Resource Report for

El Paso County Area, Colorado

Dancing Wolf Estates

December 31, 2018

Preface

Soil surveys contain information that affects land use planning in survey areas. They highlight soil limitations that affect various land uses and provide information about the properties of the soils in the survey areas. Soil surveys are designed for many different users, including farmers, ranchers, foresters, agronomists, urban planners, community officials, engineers, developers, builders, and home buyers. Also, conservationists, teachers, students, and specialists in recreation, waste disposal, and pollution control can use the surveys to help them understand, protect, or enhance the environment.

Various land use regulations of Federal, State, and local governments may impose special restrictions on land use or land treatment. Soil surveys identify soil properties that are used in making various land use or land treatment decisions. The information is intended to help the land users identify and reduce the effects of soil limitations on various land uses. The landowner or user is responsible for identifying and complying with existing laws and regulations.

Although soil survey information can be used for general farm, local, and wider area planning, onsite investigation is needed to supplement this information in some cases. Examples include soil quality assessments (http://www.nrcs.usda.gov/wps/portal/nrcs/main/soils/health/) and certain conservation and engineering applications. For more detailed information, contact your local USDA Service Center (https://offices.sc.egov.usda.gov/locator/app?agency=nrcs) or your NRCS State Soil Scientist (http://www.nrcs.usda.gov/wps/portal/nrcs/detail/soils/contactus/?cid=nrcs142p2_053951).

Great differences in soil properties can occur within short distances. Some soils are seasonally wet or subject to flooding. Some are too unstable to be used as a foundation for buildings or roads. Clayey or wet soils are poorly suited to use as septic tank absorption fields. A high water table makes a soil poorly suited to basements or underground installations.

The National Cooperative Soil Survey is a joint effort of the United States Department of Agriculture and other Federal agencies, State agencies including the Agricultural Experiment Stations, and local agencies. The Natural Resources Conservation Service (NRCS) has leadership for the Federal part of the National Cooperative Soil Survey.

Information about soils is updated periodically. Updated information is available through the NRCS Web Soil Survey, the site for official soil survey information.

The U.S. Department of Agriculture (USDA) prohibits discrimination in all its programs and activities on the basis of race, color, national origin, age, disability, and where applicable, sex, marital status, familial status, parental status, religion, sexual orientation, genetic information, political beliefs, reprisal, or because all or a part of an individual's income is derived from any public assistance program. (Not all prohibited bases apply to all programs.) Persons with disabilities who require

Contents

Soil Map

The soil map section includes the soil map for the defined area of interest, a list of soil map units on the map and extent of each map unit, and cartographic symbols displayed on the map. Also presented are various metadata about data used to produce the map, and a description of each soil map unit.

Custom Soil Resource Report
Soil Map

Map Scale: 1:3,270 if printed on A landscape (11" x 8.5") sheet.

N

Meters: 0 45 90 180 270

Feet: 0 150 300 600 900

Map projection: Web Mercator Corner coordinates: WGS84 Edge tics: UTM Zone 13N WGS84

MAP LEGEND

Area of Interest (AOI)

Area of Interest (AOI)

Soils

Soil Map Unit Polygons

Soil Map Unit Lines

Soil Map Unit Points

Special Point Features

Blowout

Borrow Pit

Clay Spot

Closed Depression

Gravel Pit

Gravelly Spot

Landfill

Lava Flow

Marsh or swamp

Mine or Quarry

Miscellaneous Water

Perennial Water

Rock Outcrop

Saline Spot

Sandy Spot

Severely Eroded Spot

Sinkhole

Slide or Slip

Sodic Spot

Spoil Area

Stony Spot

Very Stony Spot

Wet Spot

Other

Special Line Features

Water Features

Streams and Canals

Transportation

Rails

Interstate Highways

US Routes

Major Roads

Local Roads

Background

Aerial Photography

MAP INFORMATION

The soil surveys that comprise your AOI were mapped at 1:24,000.

Warning: Soil Map may not be valid at this scale.

Enlargement of maps beyond the scale of mapping can cause misunderstanding of the detail of mapping and accuracy of soil line placement. The maps do not show the small areas of contrasting soils that could have been shown at a more detailed scale.

Please rely on the bar scale on each map sheet for map measurements.

Source of Map: Natural Resources Conservation Service
Web Soil Survey URL:
Coordinate System: Web Mercator (EPSG:3857)

Maps from the Web Soil Survey are based on the Web Mercator projection, which preserves direction and shape but distorts distance and area. A projection that preserves area, such as the Albers equal-area conic projection, should be used if more accurate calculations of distance or area are required.

This product is generated from the USDA-NRCS certified data as of the version date(s) listed below.

Soil Survey Area: El Paso County Area, Colorado
Survey Area Data: Version 16, Sep 10, 2018

Soil map units are labeled (as space allows) for map scales 1:50,000 or larger.

Date(s) aerial images were photographed: Jun 7, 2016—Aug 17, 2017

The orthophoto or other base map on which the soil lines were compiled and digitized probably differs from the background imagery displayed on these maps. As a result, some minor shifting of map unit boundaries may be evident.

Map Unit Legend

Map Unit Symbol	Map Unit Name	Acres in AOI	Percent of AOI
21	Cruckton sandy loam, 1 to 9 percent slopes	8.8	21.2%
26	Elbeth sandy loam, 8 to 15 percent slopes	13.8	33.1%
92	Tomah-Crowfoot loamy sands, 3 to 8 percent slopes	19.1	45.7%
Totals for Area of Interest		**41.8**	**100.0%**

Map Unit Descriptions

The map units delineated on the detailed soil maps in a soil survey represent the soils or miscellaneous areas in the survey area. The map unit descriptions, along with the maps, can be used to determine the composition and properties of a unit.

A map unit delineation on a soil map represents an area dominated by one or more major kinds of soil or miscellaneous areas. A map unit is identified and named according to the taxonomic classification of the dominant soils. Within a taxonomic class there are precisely defined limits for the properties of the soils. On the landscape, however, the soils are natural phenomena, and they have the characteristic variability of all natural phenomena. Thus, the range of some observed properties may extend beyond the limits defined for a taxonomic class. Areas of soils of a single taxonomic class rarely, if ever, can be mapped without including areas of other taxonomic classes. Consequently, every map unit is made up of the soils or miscellaneous areas for which it is named and some minor components that belong to taxonomic classes other than those of the major soils.

Most minor soils have properties similar to those of the dominant soil or soils in the map unit, and thus they do not affect use and management. These are called noncontrasting, or similar, components. They may or may not be mentioned in a particular map unit description. Other minor components, however, have properties and behavioral characteristics divergent enough to affect use or to require different management. These are called contrasting, or dissimilar, components. They generally are in small areas and could not be mapped separately because of the scale used. Some small areas of strongly contrasting soils or miscellaneous areas are identified by a special symbol on the maps. If included in the database for a given area, the contrasting minor components are identified in the map unit descriptions along with some characteristics of each. A few areas of minor components may not have been observed, and consequently they are not mentioned in the descriptions, especially where the pattern was so complex that it was impractical to make enough observations to identify all the soils and miscellaneous areas on the landscape.

The presence of minor components in a map unit in no way diminishes the usefulness or accuracy of the data. The objective of mapping is not to delineate pure taxonomic classes but rather to separate the landscape into landforms or

landform segments that have similar use and management requirements. The delineation of such segments on the map provides sufficient information for the development of resource plans. If intensive use of small areas is planned, however, onsite investigation is needed to define and locate the soils and miscellaneous areas.

An identifying symbol precedes the map unit name in the map unit descriptions. Each description includes general facts about the unit and gives important soil properties and qualities.

Soils that have profiles that are almost alike make up a *soil series*. Except for differences in texture of the surface layer, all the soils of a series have major horizons that are similar in composition, thickness, and arrangement.

Soils of one series can differ in texture of the surface layer, slope, stoniness, salinity, degree of erosion, and other characteristics that affect their use. On the basis of such differences, a soil series is divided into *soil phases*. Most of the areas shown on the detailed soil maps are phases of soil series. The name of a soil phase commonly indicates a feature that affects use or management. For example, Alpha silt loam, 0 to 2 percent slopes, is a phase of the Alpha series.

Some map units are made up of two or more major soils or miscellaneous areas. These map units are complexes, associations, or undifferentiated groups.

A *complex* consists of two or more soils or miscellaneous areas in such an intricate pattern or in such small areas that they cannot be shown separately on the maps. The pattern and proportion of the soils or miscellaneous areas are somewhat similar in all areas. Alpha-Beta complex, 0 to 6 percent slopes, is an example.

An *association* is made up of two or more geographically associated soils or miscellaneous areas that are shown as one unit on the maps. Because of present or anticipated uses of the map units in the survey area, it was not considered practical or necessary to map the soils or miscellaneous areas separately. The pattern and relative proportion of the soils or miscellaneous areas are somewhat similar. Alpha-Beta association, 0 to 2 percent slopes, is an example.

An *undifferentiated group* is made up of two or more soils or miscellaneous areas that could be mapped individually but are mapped as one unit because similar interpretations can be made for use and management. The pattern and proportion of the soils or miscellaneous areas in a mapped area are not uniform. An area can be made up of only one of the major soils or miscellaneous areas, or it can be made up of all of them. Alpha and Beta soils, 0 to 2 percent slopes, is an example.

Some surveys include *miscellaneous areas*. Such areas have little or no soil material and support little or no vegetation. Rock outcrop is an example.

El Paso County Area, Colorado

21—Cruckton sandy loam, 1 to 9 percent slopes

Map Unit Setting

National map unit symbol: 367s
Elevation: 7,200 to 7,600 feet
Mean annual precipitation: 16 to 18 inches
Mean annual air temperature: 42 to 46 degrees F
Frost-free period: 110 to 120 days
Farmland classification: Not prime farmland

Map Unit Composition

Cruckton and similar soils: 85 percent
Estimates are based on observations, descriptions, and transects of the mapunit.

Description of Cruckton

Setting

Landform: Hills, flats
Landform position (three-dimensional): Side slope, talf
Down-slope shape: Linear
Across-slope shape: Linear
Parent material: Alluvium derived from arkose

Typical profile

A - 0 to 11 inches: sandy loam
Bt - 11 to 28 inches: sandy loam
C - 28 to 60 inches: loamy coarse sand

Properties and qualities

Slope: 1 to 9 percent
Depth to restrictive feature: More than 80 inches
Natural drainage class: Well drained
Runoff class: Medium
Capacity of the most limiting layer to transmit water (Ksat): Moderately high to high (0.60 to 2.00 in/hr)
Depth to water table: More than 80 inches
Frequency of flooding: None
Frequency of ponding: None
Available water storage in profile: Low (about 5.9 inches)

Interpretive groups

Land capability classification (irrigated): None specified
Land capability classification (nonirrigated): 4e
Hydrologic Soil Group: B
Ecological site: Sandy Divide (R049BY216CO)
Hydric soil rating: No

Minor Components

Other soils

Percent of map unit:
Hydric soil rating: No

26—Elbeth sandy loam, 8 to 15 percent slopes

Map Unit Setting

National map unit symbol: 367y
Elevation: 7,300 to 7,600 feet
Farmland classification: Not prime farmland

Map Unit Composition

Elbeth and similar soils: 85 percent
Estimates are based on observations, descriptions, and transects of the mapunit.

Description of Elbeth

Setting

Landform: Hills
Landform position (three-dimensional): Side slope
Down-slope shape: Linear
Across-slope shape: Linear
Parent material: Alluvium derived from arkose

Typical profile

A - 0 to 3 inches: sandy loam
E - 3 to 23 inches: loamy sand
Bt - 23 to 68 inches: sandy clay loam
C - 68 to 74 inches: sandy clay loam

Properties and qualities

Slope: 8 to 15 percent
Depth to restrictive feature: More than 80 inches
Natural drainage class: Well drained
Runoff class: Medium
Capacity of the most limiting layer to transmit water (Ksat): Moderately high (0.20 to 0.60 in/hr)
Depth to water table: More than 80 inches
Frequency of flooding: None
Frequency of ponding: None
Available water storage in profile: Moderate (about 7.1 inches)

Interpretive groups

Land capability classification (irrigated): None specified
Land capability classification (nonirrigated): 4e
Hydrologic Soil Group: B
Hydric soil rating: No

Minor Components

Other soils

Percent of map unit:
Hydric soil rating: No

Pleasant

Percent of map unit:
Landform: Depressions
Hydric soil rating: Yes

92—Tomah-Crowfoot loamy sands, 3 to 8 percent slopes

Map Unit Setting

National map unit symbol: 36b9
Elevation: 7,300 to 7,600 feet
Farmland classification: Not prime farmland

Map Unit Composition

Tomah and similar soils: 50 percent
Crowfoot and similar soils: 30 percent
Estimates are based on observations, descriptions, and transects of the mapunit.

Description of Tomah

Setting

Landform: Alluvial fans, hills
Landform position (three-dimensional): Side slope, crest
Down-slope shape: Linear
Across-slope shape: Linear
Parent material: Alluvium derived from arkose and/or residuum weathered from arkose

Typical profile

A - 0 to 10 inches: loamy sand
E - 10 to 22 inches: coarse sand
C - 48 to 60 inches: coarse sand

Properties and qualities

Slope: 3 to 8 percent
Depth to restrictive feature: More than 80 inches
Natural drainage class: Well drained
Runoff class: Medium
Capacity of the most limiting layer to transmit water (Ksat): Moderately high to high (0.60 to 2.00 in/hr)
Depth to water table: More than 80 inches
Frequency of flooding: None
Frequency of ponding: None
Available water storage in profile: Very low (about 2.0 inches)

Interpretive groups

Land capability classification (irrigated): None specified
Land capability classification (nonirrigated): 4e
Hydrologic Soil Group: B
Ecological site: Sandy Divide (R049BY216CO)
Hydric soil rating: No

Description of Crowfoot

Setting

Landform: Alluvial fans, hills
Landform position (three-dimensional): Side slope, crest
Down-slope shape: Linear
Across-slope shape: Linear
Parent material: Alluvium

Typical profile

A - 0 to 12 inches: loamy sand
E - 12 to 23 inches: sand
Bt - 23 to 36 inches: sandy clay loam
C - 36 to 60 inches: coarse sand

Properties and qualities

Slope: 3 to 8 percent
Depth to restrictive feature: More than 80 inches
Natural drainage class: Well drained
Runoff class: Medium
Capacity of the most limiting layer to transmit water (Ksat): Moderately high to high (0.60 to 2.00 in/hr)
Depth to water table: More than 80 inches
Frequency of flooding: None
Frequency of ponding: None
Available water storage in profile: Low (about 4.7 inches)

Interpretive groups

Land capability classification (irrigated): None specified
Land capability classification (nonirrigated): 4e
Hydrologic Soil Group: B
Ecological site: Sandy Divide (R049BY216CO)
Hydric soil rating: No

Minor Components

Other soils

Percent of map unit:
Hydric soil rating: No

Pleasant

Percent of map unit:
Landform: Depressions
Hydric soil rating: Yes

References

American Association of State Highway and Transportation Officials (AASHTO). 2004. Standard specifications for transportation materials and methods of sampling and testing. 24th edition.

American Society for Testing and Materials (ASTM). 2005. Standard classification of soils for engineering purposes. ASTM Standard D2487-00.

Cowardin, L.M., V. Carter, F.C. Golet, and E.T. LaRoe. 1979. Classification of wetlands and deep-water habitats of the United States. U.S. Fish and Wildlife Service FWS/OBS-79/31.

Federal Register. July 13, 1994. Changes in hydric soils of the United States.

Federal Register. September 18, 2002. Hydric soils of the United States.

Hurt, G.W., and L.M. Vasilas, editors. Version 6.0, 2006. Field indicators of hydric soils in the United States.

National Research Council. 1995. Wetlands: Characteristics and boundaries.

Soil Survey Division Staff. 1993. Soil survey manual. Soil Conservation Service. U.S. Department of Agriculture Handbook 18. http://www.nrcs.usda.gov/wps/portal/nrcs/detail/national/soils/?cid=nrcs142p2_054262

Soil Survey Staff. 1999. Soil taxonomy: A basic system of soil classification for making and interpreting soil surveys. 2nd edition. Natural Resources Conservation Service, U.S. Department of Agriculture Handbook 436. http://www.nrcs.usda.gov/wps/portal/nrcs/detail/national/soils/?cid=nrcs142p2_053577

Soil Survey Staff. 2010. Keys to soil taxonomy. 11th edition. U.S. Department of Agriculture, Natural Resources Conservation Service. http://www.nrcs.usda.gov/wps/portal/nrcs/detail/national/soils/?cid=nrcs142p2_053580

Tiner, R.W., Jr. 1985. Wetlands of Delaware. U.S. Fish and Wildlife Service and Delaware Department of Natural Resources and Environmental Control, Wetlands Section.

United States Army Corps of Engineers, Environmental Laboratory. 1987. Corps of Engineers wetlands delineation manual. Waterways Experiment Station Technical Report Y-87-1.

United States Department of Agriculture, Natural Resources Conservation Service. National forestry manual. http://www.nrcs.usda.gov/wps/portal/nrcs/detail/soils/home/?cid=nrcs142p2_053374

United States Department of Agriculture, Natural Resources Conservation Service. National range and pasture handbook. http://www.nrcs.usda.gov/wps/portal/nrcs/detail/national/landuse/rangepasture/?cid=stelprdb1043084

United States Department of Agriculture, Natural Resources Conservation Service. National soil survey handbook, title 430-VI. http://www.nrcs.usda.gov/wps/portal/nrcs/detail/soils/scientists/?cid=nrcs142p2_054242

United States Department of Agriculture, Natural Resources Conservation Service. 2006. Land resource regions and major land resource areas of the United States, the Caribbean, and the Pacific Basin. U.S. Department of Agriculture Handbook 296. http://www.nrcs.usda.gov/wps/portal/nrcs/detail/national/soils/?cid=nrcs142p2_053624

United States Department of Agriculture, Soil Conservation Service. 1961. Land capability classification. U.S. Department of Agriculture Handbook 210. http://www.nrcs.usda.gov/Internet/FSE_DOCUMENTS/nrcs142p2_052290.pdf

PHIL WEINERT ENGINEERING
6755 Earl Drive Suite 105
COLORADO SPRINGS, CO 80918
Phone (719) 548-5019
Fax (719) 548-5034

JOB McElhoes - 960089
SHEET NO. ____ OF ____
CALCULATED BY MPH DATE 30 Apr 196
CHECKED BY ____ DATE ____
SCALE ____

On Site Developed & Undeveloped

Average Developed C

$$C_{D_{10}} = \frac{(39.95)(0.25) + (0.76)(.30)}{40.71} = \frac{9.9875 + 0.228}{40.71}$$

$$C_{D_{10}} = 0.251$$

$$C_{D_{100}} = \frac{(39.95)(0.35) + (0.76)(0.40)}{40.71} = \frac{13.9825 + 0.304}{40.71}$$

$$C_{D_{100}} = 0.351$$

ΔQ for Developed vs. Undeveloped

$$Q_{un_{10}} = (0.25)(2.4)(40) = 24 \text{ cfs}$$

$$Q_{un_{100}} = (0.35)(3.8)(40) = 53.2 \text{ cfs}$$

$$Q_{D_{10}} = (0.251)(2.4)(40) = 24.1 \text{ cfs}$$

$$Q_{D_{100}} = (0.351)(3.8)(40) = 53.4 \text{ cfs}$$

$$\Delta Q_{10} = 0.1 \text{ cfs}$$

$$\Delta Q_{100} = 0.2 \text{ cfs}$$

These runoff calculations from the original drainage report still apply.Minor and major storm runoff is shown for various design points on the attached drainage map. The design points were added together as appropriate to determine the discharge at the proposed Lot 4 and 5 culverts. New hydrology calculations were performed for Lots 1, 2, and 3 for their contribution to Design Point 5 culverts. See Rational spreadsheet for those calculations.

TABLE 5-1

RECOMMENDED AVERAGE RUNOFF COEFFICIENTS AND PERCENT IMPERVIOUS

This Table was used for runoff coefficients in the original Drainage Report. New calculations use a revised Table 6-6 from the Drainage Criteria Manual. Differences are not significant.

LAND USE OR SURFACE CHARACTERISTICS	PERCENT IMPERVIOUS	"C" FREQUENCY 10 A&B*	10 C&D*	100 A&B*	100 C&D*
Business					
Commercial Areas	95	0.90	0.90	0.90	0.90
Neighborhood Areas	70	0.75	0.75	0.80	0.80
Residential					
1/8 Acre or less	65	0.60	0.70	0.70	0.80
1/4 Acre	40	0.50	0.60	0.60	0.70
1/3 Acre	30	0.40	0.50	0.55	0.60
1/2 Acre	25	0.35	0.45	0.45	0.55
1 Acre DEVELOPED (this is a conservative coefficient since actual lot size is 2.5 to 5 acres	20	0.30	0.40	0.40	0.50
Industrial					
Light Areas	80	0.70	0.70	0.80	0.80
Heavy Areas	90	0.80	0.80	0.90	0.90
Parks and Cemeteries	7	0.30	0.35	0.55	0.60
Playgrounds	13	0.30	0.35	0.60	0.65
Railroad Yard Areas	40	0.50	0.55	0.60	0.65
Undeveloped Areas					
Historic Flow Analysis- Greenbelts, Agricultural	2	0.15	0.25	0.20	0.30
Pasture/Meadow HISTORIC	0	0.25	0.30	0.35	0.45
Forest	0	0.10	0.15	0.15	0.20
Exposed Rock	100	0.90	0.90	0.95	0.95
Offsite Flow Analysis (when land use not defined)	45	0.55	0.60	0.65	0.70
Streets					
Paved	100	0.90	0.90	0.95	0.95
Gravel	80	0.80	0.80	0.85	0.85
Drive and Walks	100	0.90	0.90	0.95	0.95
Roofs	90	0.90	0.90	0.95	0.95
Lawns	0	0.25	0.30	0.35	0.45

* Hydrologic Soil Group

9/30/90

Dancing Wolf Estates IV Lots 1,2,3: Existing & Proposed Hydrology

Final

Rational Method

	User Entered Data
	Calculated Cells

Basin	Area				Landuse & C-Values														Flow	Overland Flow				Channel Flow / Gutter Flow				Time of Concentration						
	Total Area	Total Area	A/B Soil	C/D Soil	Surface Type 1 (Driveway - Gravel)			Surface Type 2 (Undeveloped - Pasture/Meadow)			Surface Type 3 (Residential - 1 Acre)			Surface Type 4 (Commercial)			Average	Average	Total Length	True Initial Length	High Point	Low Point	Slope	True Channel Length	High Point	Low Point	Slope	Initial	Channel	Total	i_{10}	Q_{10}	i_{100}	Q_{100}
	[sf]	[ac]	[sf]	[sf]	C_{10}	C_{100}	Area	C_{10}	C_{100}	Area	C_{10}	C_{100}	Area	C_5	C_{100}	Area	C_{10}	C_{100}	[ft]	[ft]	Elevation	Elevation	[ft/ft]	[ft]	Elevation	Elevation	[ft/ft]	[min]	[min]	[min]	[in/hr]	[cfs]	[in/hr]	[cfs]
Historic/DWE																																			
Area of L1/2/3	489415	11.24	489415	0	0.90	0.96	0	0.15	0.35	489415	0.27	0.44	0	0.45	0.59		0.15	0.35	950	350	7560.00	7532.00	0.08	600	7532.00	7496.00	0.06	16.16	5.83	15.28	3.49	**5.89**	5.86	**23.06**
Proposed/DWE IV																																			
L1	218814	5.02	218814	0	0.63	0.70	0.00	0.15	0.35	0	0.27	0.44	0	0.83	0.88	218814	0.83	0.88	950	350	7560.00	7532.00	0.08	600	7532.00	7496.00	0.06	4.59	5.83	10.42	4.07	**16.96**	6.83	**30.18**
L2	114575	2.63	114575	0	0.63	0.70	4000.00	0.15	0.35	67015	0.27	0.44	43560				0.21	0.40	770	420	7548.00	7516.00	0.08	350	7516.00	7496.00	0.06	16.80	1.22	14.28	3.59	**2.01**	6.04	**6.29**
L3	156026	3.58	156026	0	0.63	0.70	4000.00	0.15	0.35	108466	0.27	0.44	43560				0.20	0.38	770	420	7556.00	7516.00	0.10	350	7516.00	7496.00	0.06	15.90	1.22	14.28	3.59	**2.52**	6.04	**8.30**
TOTAL	489415	**11.24**																														**21.49**		**44.78**

Overland Flow

True Initial Length = Length from top of basin to transition point between sheet, channel flow or storm drain
High Point Elevation = Elevation at top of basin
Low Point Elevation = Elevation at transition point between sheet and channel flow

Channel Flow

True Channel Length = Length from transition point between sheet and channel flow to basin outlet
High Point Elevation = Elevation at transition point between sheet and channel flow
Low Point Elevation = Elevation at basin outlet

Use Rational Method if basin is less than 130 acres

Design Storms determined from City of Colorado Springs Drainage Criteria Manual (COS DCM)
C values taken from COS DCM Table 6-6, based on predominant soil type for each basin
Elevations taken from Proposed surfaces and Topographic Survey.
Intensities determined using the equations in Figure 6-5 of the COS DCM

Total Runoff for Lots 3 & 4 Driveway Culvert Design & Analysis at Design Point 5					
	DP1	DP3	DP4	Lots 1/2/3	DP5 TOTAL (cfs)
Q_{10}	34.00	124.00	10.00	21.49	**189.49**
Q_{100}	75.00	274.00	18.00	44.78	**411.78**

Dancing Wolf Estates IV Lots 2-7: Historic & Proposed Hydrology
Final
Rational Method

	User Entered Data
	Calculated Cells

Basin	Area				Landuse & C-Values														Flow	Overland Flow				Channel Flow / Gutter Flow				Time of Concentration						
	Total Area	Total Area	A/B Soil	C/D Soil	Surface Type 1 (Driveway - Gravel)			Surface Type 2 (Undeveloped - Pasture/Meadow)			Surface Type 3 (Residential - 1 Acre)			Surface Type 4 (Commercial)			Average	Average	Total Length	True Initial Length	High Point	Low Point	Slope	True Channel Length	High Point	Low Point	Slope	Initial	Channel	Total	i_{10}	Q_{10}	i_{100}	Q_{100}
	[sf]	[ac]	[sf]	[sf]	C_{10}	C_{100}	Area	C_{10}	C_{100}	Area	C_{10}	C_{100}	Area	C_5	C_{100}	Area	C_{10}	C_{100}	[ft]	[ft]	Elevation	Elevation	[ft/ft]	[ft]	Elevation	Elevation	[ft/ft]	[min]	[min]	[min]	[in/hr]	[cfs]	[in/hr]	[cfs]
Existing 4 lots																																			
DWE L2	232412	5.34	232412	0	0.63	0.70	4000.00	0.15	0.35	184852	0.27	0.44	43560				0.18	0.37	770	420	7548.00	7516.00	0.08	350	7516.00	7496.00	0.06	17.40	3.49	14.28	3.59	**3.47**	6.04	**12.01**
DWE L3	229056	5.26	229056	0	0.63	0.70	4000.00	0.15	0.35	181496	0.27	0.44	43560				0.18	0.37	665	300	7540.00	7520.00	0.07	365	7520.00	7484.00	0.10	15.36	2.77	13.69	3.66	**3.49**	6.14	**12.05**
DWE III L1	114409	2.63	114409	0	0.63	0.70	4000.00	0.15	0.35	66849	0.27	0.44	43560				0.21	0.40	530	230	7546.00	7520.00	0.11	300	7520.00	7500.00	0.07	10.92	2.77	12.94	3.74	**2.09**	6.28	**6.54**
DWE III L2	300722	6.90	300722	0	0.63	0.70	4000.00	0.15	0.35	253162	0.27	0.44	43560				0.17	0.37	875	150	7558.00	7540.00	0.12	725	7540.00	7484.00	0.08	9.02	6.21	14.86	3.53	**4.24**	5.93	**15.06**
TOTAL		**20.12**																														**13.28**		**45.66**
Proposed 6 lots																																			
DWE IV																																			
L2	114575	2.63	114575	0	0.63	0.70	4000.00	0.15	0.35	67015	0.27	0.44	43560				0.21	0.40	770	420	7548.00	7516.00	0.08	350	7516.00	7496.00	0.06	16.80	3.49	14.28	3.59	**2.01**	6.04	**6.29**
L3	156026	3.58	156026	0	0.63	0.70	4000.00	0.15	0.35	108466	0.27	0.44	43560				0.20	0.38	770	420	7556.00	7516.00	0.10	350	7516.00	7496.00	0.06	15.90	3.49	14.28	3.59	**2.52**	6.04	**8.30**
L4	231821	5.32	231821	0	0.63	0.70	4000.00	0.15	0.35	184261	0.27	0.44	43560				0.18	0.37	665	300	7540.00	7520.00	0.07	365	7520.00	7484.00	0.10	15.37	2.77	13.69	3.66	**3.52**	6.14	**12.19**
L5	139517	3.20	139517	0	0.63	0.70	4000.00	0.15	0.35	91957	0.27	0.44	43560				0.20	0.39	525	255	7524.00	7498.00	0.10	270	7498.00	7484.00	0.05	12.04	2.82	12.92	3.75	**2.41**	6.29	**7.82**
L6	111558	2.56	111558	0	0.63	0.70	4000.00	0.15	0.35	63998	0.27	0.44	43560				0.21	0.40	530	230	7546.00	7520.00	0.11	300	7520.00	7500.00	0.07	10.90	2.77	12.94	3.74	**2.05**	6.28	**6.40**
L7	123054	2.82	123054	0	0.63	0.70	4000.00	0.15	0.35	75494	0.27	0.44	43560				0.21	0.39	350	150	7558.00	7540.00	0.12	200	7540.00	7525.00	0.08	8.69	1.74	10.43	4.07	**2.39**	6.83	**7.58**
TOTAL	**876551.00**	**20.12**																														**14.91**		**48.58**

TOTAL INCREASED RUNOFF:		**1.62**	**2.92**
PERCENT INCREASE FOR ALL DWE:		0.80%	0.66%

Overland Flow

True Initial Length = Length from top of basin to transition point between sheet, channel flow or storm drain
High Point Elevation = Elevation at top of basin
Low Point Elevation = Elevation at transition point between sheet and channel flow

Channel Flow

True Channel Length = Length from transition point between sheet and channel flow to basin outlet
High Point Elevation = Elevation at transition point between sheet and channel flow
Low Point Elevation = Elevation at basin outlet

Use Rational Method if basin is less than 130 acres

Design Storms determined from City of Colorado Springs Drainage Criteria Manual (COS DCM)
C values taken from COS DCM Table 6-6, based on predominant soil type for each basin
Elevations taken from Proposed surfaces and Topographic Survey.
Intensities determined using the equations in Figure 6-5 of the COS DCM

Hydrology for Replatted Lots in DWE IV			
BASIN	**AREA (ACRES)**	**Q_{10} (CFS)**	**Q_{100} (CFS)**
DWE IV L2	**2.63**	**2.01**	**6.29**
DWE IV L3	**3.58**	**2.52**	**8.30**
DWE IV L4	**5.32**	**3.52**	**12.19**
DWE IV L5	**3.20**	**2.41**	**7.82**
DWE IV L6	**2.56**	**2.05**	**6.40**
DWE IV L7	**2.82**	**2.39**	**7.58**

Table 6-6. Runoff Coefficients for Rational Method
(Source: UDFCD 2001)

Land Use or Surface Characteristics	Percent Impervious	Runoff Coefficients											
		2-year		5-year		10-year		25-year		50-year		100-year	
		HSG A&B	HSG C&D	HSG A&B	HSG C&D	HSG A&B	HSG C&D	HSG A&B	HSG C&D	HSG A&B	HSG C&D	HSG A&B	HSG C&D
Business													
Commercial Areas	95	0.79	0.80	0.81	0.82	0.83	0.84	0.85	0.87	0.87	0.88	0.88	0.89
Neighborhood Areas	70	0.45	0.49	0.49	0.53	0.53	0.57	0.58	0.62	0.60	0.65	0.62	0.68
Residential													
1/8 Acre or less	65	0.41	0.45	0.45	0.49	0.49	0.54	0.54	0.59	0.57	0.62	0.59	0.65
1/4 Acre	40	0.23	0.28	0.30	0.35	0.36	0.42	0.42	0.50	0.46	0.54	0.50	0.58
1/3 Acre	30	0.18	0.22	0.25	0.30	0.32	0.38	0.39	0.47	0.43	0.52	0.47	0.57
1/2 Acre	25	0.15	0.20	0.22	0.28	0.30	0.36	0.37	0.46	0.41	0.51	0.46	0.56
1 Acre	20	0.12	0.17	0.20	0.26	0.27	0.34	0.35	0.44	0.40	0.50	0.44	0.55
Industrial													
Light Areas	80	0.57	0.60	0.59	0.63	0.63	0.66	0.66	0.70	0.68	0.72	0.70	0.74
Heavy Areas	90	0.71	0.73	0.73	0.75	0.75	0.77	0.78	0.80	0.80	0.82	0.81	0.83
Parks and Cemeteries	7	0.05	0.09	0.12	0.19	0.20	0.29	0.30	0.40	0.34	0.46	0.39	0.52
Playgrounds	13	0.07	0.13	0.16	0.23	0.24	0.31	0.32	0.42	0.37	0.48	0.41	0.54
Railroad Yard Areas	40	0.23	0.28	0.30	0.35	0.36	0.42	0.42	0.50	0.46	0.54	0.50	0.58
Undeveloped Areas													
Historic Flow Analysis-- Greenbelts, Agriculture	2	0.03	0.05	0.09	0.16	0.17	0.26	0.26	0.38	0.31	0.45	0.36	0.51
Pasture/Meadow	0	0.02	0.04	0.08	0.15	0.15	0.25	0.25	0.37	0.30	0.44	0.35	0.50
Forest	0	0.02	0.04	0.08	0.15	0.15	0.25	0.25	0.37	0.30	0.44	0.35	0.50
Exposed Rock	100	0.89	0.89	0.90	0.90	0.92	0.92	0.94	0.94	0.95	0.95	0.96	0.96
Offsite Flow Analysis (when landuse is undefined)	45	0.26	0.31	0.32	0.37	0.38	0.44	0.44	0.51	0.48	0.55	0.51	0.59
Streets													
Paved	100	0.89	0.89	0.90	0.90	0.92	0.92	0.94	0.94	0.95	0.95	0.96	0.96
Gravel	80	0.57	0.60	0.59	0.63	0.63	0.66	0.66	0.70	0.68	0.72	0.70	0.74
Drive and Walks	100	0.89	0.89	0.90	0.90	0.92	0.92	0.94	0.94	0.95	0.95	0.96	0.96
Roofs	90	0.71	0.73	0.73	0.75	0.75	0.77	0.78	0.80	0.80	0.82	0.81	0.83
Lawns	0	0.02	0.04	0.08	0.15	0.15	0.25	0.25	0.37	0.30	0.44	0.35	0.50

3.2 Time of Concentration

One of the basic assumptions underlying the Rational Method is that runoff is a function of the average rainfall rate during the time required for water to flow from the hydraulically most remote part of the drainage area under consideration to the design point. However, in practice, the time of concentration can be an empirical value that results in reasonable and acceptable peak flow calculations.

For urban areas, the time of concentration (t_c) consists of an initial time or overland flow time (t_i) plus the travel time (t_t) in the storm sewer, paved gutter, roadside drainage ditch, or drainage channel. For non-urban areas, the time of concentration consists of an overland flow time (t_i) plus the time of travel in a concentrated form, such as a swale or drainageway. The travel portion (t_t) of the time of concentration can be estimated from the hydraulic properties of the storm sewer, gutter, swale, ditch, or drainageway. Initial time, on the other hand, will vary with surface slope, depression storage, surface cover, antecedent rainfall, and infiltration capacity of the soil, as well as distance of surface flow. The time of concentration is represented by Equation 6-7 for both urban and non-urban areas.

Culvert Designer/Analyzer Report
2-48" CMP Culverts

Design Discharge: 10-year

Analysis Component			
Storm Event	Design	Discharge	189.49 cfs

Peak Discharge Method: User-Specified			
Design Discharge	189.49 cfs	Check Discharge	411.78 cfs

Tailwater Conditions: Constant Tailwater	
Tailwater Elevation	0.00 ft

Name	Description	Discharge	HW Elev.	Velocity
Culvert-1	2-48 inch Circular	189.47 cfs	7,499.65 ft	11.48 ft/s
Weir	Roadway (Constant Elev)	0.00 cfs	7,499.65 ft	N/A
Total	----------	189.47 cfs	7,499.65 ft	N/A

Culvert Designer/Analyzer Report
2-48" CMP Culverts

Component:Culvert-1

Culvert Summary					
Computed Headwater Eleva	7,499.65	ft	Discharge	189.47	cfs
Inlet Control HW Elev.	7,499.56	ft	Tailwater Elevation	0.00	ft
Outlet Control HW Elev.	7,499.65	ft	Control Type	Entrance Control	
Headwater Depth/Height	1.16				

Grades					
Upstream Invert	7,495.00	ft	Downstream Invert	7,493.50	ft
Length	50.00	ft	Constructed Slope	0.030000	ft/ft

Hydraulic Profile					
Profile	S2		Depth, Downstream	2.50	ft
Slope Type	Steep		Normal Depth	2.47	ft
Flow Regime	Supercritical		Critical Depth	2.95	ft
Velocity Downstream	11.48	ft/s	Critical Slope	0.018539	ft/ft

Section					
Section Shape	Circular		Mannings Coefficient	0.024	
Section Material	CMP		Span	4.00	ft
Section Size	48 inch		Rise	4.00	ft
Number Sections	2				

Outlet Control Properties					
Outlet Control HW Elev.	7,499.65	ft	Upstream Velocity Head	1.41	ft
Ke	0.20		Entrance Loss	0.28	ft

Inlet Control Properties					
Inlet Control HW Elev.	7,499.56	ft	Flow Control	Transition	
Inlet Type	Beveled ring, 33.7° (1.5:1) bevels		Area Full	25.1	ft²
K	0.00180		HDS 5 Chart	3	
M	2.50000		HDS 5 Scale	B	
C	0.02430		Equation Form	1	
Y	0.83000				

Culvert Designer/Analyzer Report
2-48" CMP Culverts

Component:Weir

Hydraulic Component(s): Roadway (Constant Elevation)					
Discharge	0.00	cfs	Allowable HW Elevation	7,499.65	ft
Roadway Width	36.00	ft	Overtopping Coefficient	2.90	US
Length	40.00	ft	Crest Elevation	7,501.00	ft
Headwater Elevation	N/A	ft	Discharge Coefficient (Cr)	2.90	
Submergence Factor (Kt)	1.00				

Sta (ft)	Elev. (ft)
0.00	7,501.00
40.00	7,501.00

Culvert Designer/Analyzer Report
2-48" CMP Culverts

Check Discharge: 100-year

Analysis Component			
Storm Event	Check	Discharge	411.78 cfs

Peak Discharge Method: User-Specified			
Design Discharge	189.49 cfs	Check Discharge	411.78 cfs

Tailwater Conditions: Constant Tailwater	
Tailwater Elevation	0.00 ft

Name	Description	Discharge	HW Elev.	Velocity
Culvert-1	2-48 inch Circular	305.53 cfs	7,501.92 ft	12.78 ft/s
Weir	Roadway (Constant Elev)	106.29 cfs	7,501.92 ft	N/A
Total	----------	411.81 cfs	7,501.92 ft	N/A

Culvert Designer/Analyzer Report
2-48" CMP Culverts

Component:Culvert-1

Culvert Summary					
Computed Headwater Eleva	7,501.92	ft	Discharge	305.53	cfs
Inlet Control HW Elev.	7,501.85	ft	Tailwater Elevation	0.00	ft
Outlet Control HW Elev.	7,501.92	ft	Control Type	Outlet Control	
Headwater Depth/Height	1.73				

Grades					
Upstream Invert	7,495.00	ft	Downstream Invert	7,493.50	ft
Length	50.00	ft	Constructed Slope	0.030000	ft/ft

Hydraulic Profile					
Profile	CompositeM2PressureProfile		Depth, Downstream	3.62	ft
Slope Type	Mild		Normal Depth	N/A	ft
Flow Regime	Subcritical		Critical Depth	3.62	ft
Velocity Downstream	12.78	ft/s	Critical Slope	0.033816	ft/ft

Section					
Section Shape	Circular		Mannings Coefficient	0.024	
Section Material	CMP		Span	4.00	ft
Section Size	48 inch		Rise	4.00	ft
Number Sections	2				

Outlet Control Properties					
Outlet Control HW Elev.	7,501.92	ft	Upstream Velocity Head	2.30	ft
Ke	0.20		Entrance Loss	0.46	ft

Inlet Control Properties					
Inlet Control HW Elev.	7,501.85	ft	Flow Control	Submerged	
Inlet Type	Beveled ring, 33.7° (1.5:1) bevels		Area Full	25.1	ft²
K	0.00180		HDS 5 Chart	3	
M	2.50000		HDS 5 Scale	B	
C	0.02430		Equation Form	1	
Y	0.83000				

Culvert Designer/Analyzer Report
2-48" CMP Culverts

Component:Weir

Hydraulic Component(s): Roadway (Constant Elevation)					
Discharge	106.29	cfs	Allowable HW Elevation	7,501.92	ft
Roadway Width	36.00	ft	Overtopping Coefficient	3.04	US
Length	40.00	ft	Crest Elevation	7,501.00	ft
Headwater Elevation	7,501.92	ft	Discharge Coefficient (Cr)	3.04	
Submergence Factor (Kt)	1.00				

Sta (ft)	Elev. (ft)
0.00	7,501.00
40.00	7,501.00

Determination of Culvert Headwater and Outlet Protection

Project: Dancing Wolf Estates IV Vacation/Replat
Basin ID: Design Point 5 Upstream and Downstream Riprap

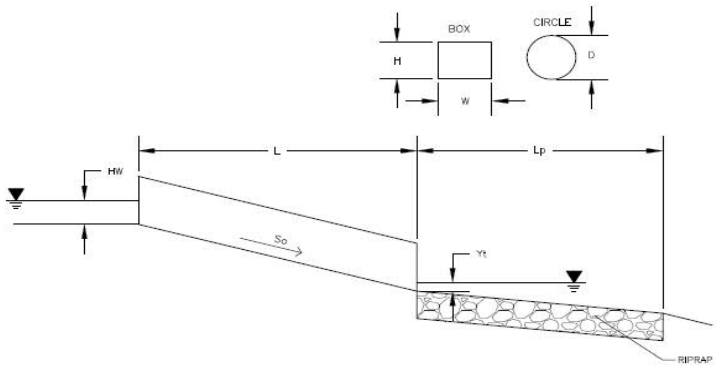

Soil Type:
Choose One:
- (●) Sandy
- ( ) Non-Sandy

Design Information (Input):

Design Discharge	Q =	411.78	cfs
Circular Culvert:			
Barrel Diameter in Inches	D =	48	inches
Inlet Edge Type (Choose from pull-down list)	1.5 : 1 Beveled Edge		
Box Culvert:		**OR**	
Barrel Height (Rise) in Feet	Height (Rise) =		ft
Barrel Width (Span) in Feet	Width (Span) =		ft
Inlet Edge Type (Choose from pull-down list)			
Number of Barrels	No =	2	
Inlet Elevation	Elev IN =	7495	ft
Outlet Elevation **OR** Slope	Elev OUT =	7493.5	ft
Culvert Length	L =	50	ft
Manning's Roughness	n =	0.024	
Bend Loss Coefficient	k_b =	0	
Exit Loss Coefficient	k_x =	1	
Tailwater Surface Elevation	Elev Y_t =		ft
Max Allowable Channel Velocity	V =	5	ft/s

Required Protection (Output):

Tailwater Surface Height	Y_t =	1.60	ft
Flow Area at Max Channel Velocity	A_t =	41.18	ft^2
Culvert Cross Sectional Area Available	A =	12.57	ft^2
Entrance Loss Coefficient	k_e =	0.20	
Friction Loss Coefficient	k_f =	0.84	
Sum of All Losses Coefficients	k_s =	2.04	ft
Culvert Normal Depth	Y_n =	1.94	ft
Culvert Critical Depth	Y_c =	3.86	ft
Tailwater Depth for Design	d =	3.93	ft
Adjusted Diameter **OR** Adjusted Rise	D_a =	-	ft
Expansion Factor	1/(2*tan(Θ)) =	1.85	
Flow/Diameter$^{2.5}$ **OR** Flow/(Span * Rise$^{1.5}$)	Q/D^2.5 =	6.43	$ft^{0.5}/s$
Froude Number	Fr =	-	**Pressure flow!**
Tailwater/Adjusted Diameter **OR** Tailwater/Adjusted Rise	Yt/D =	0.40	
Inlet Control Headwater	HW_I =	10.06	ft
Outlet Control Headwater	HW_O =	10.92	
Design Headwater Elevation	**HW =**	**7,505.92**	**ft**
Headwater/Diameter OR Headwater/Rise Ratio	**HW/D =**	**2.73**	**HW/D > 1.5!**
Minimum Theoretical Riprap Size	d_{50} =	21	in
Nominal Riprap Size	d_{50} =	24	in
UDFCD Riprap Type	**Type =**	**VH**	
Length of Protection	**L_p =**	**41**	**ft**
Width of Protection	**T =**	**27**	**ft**

This spreadsheet is being used for riprap design only. The CulvertMaster Reports are used for headwater elevation because they analyze both the culvert discharge and the overtopping of the driveway in computing the headwater elevation.

Revision: Change double culvert location add note.

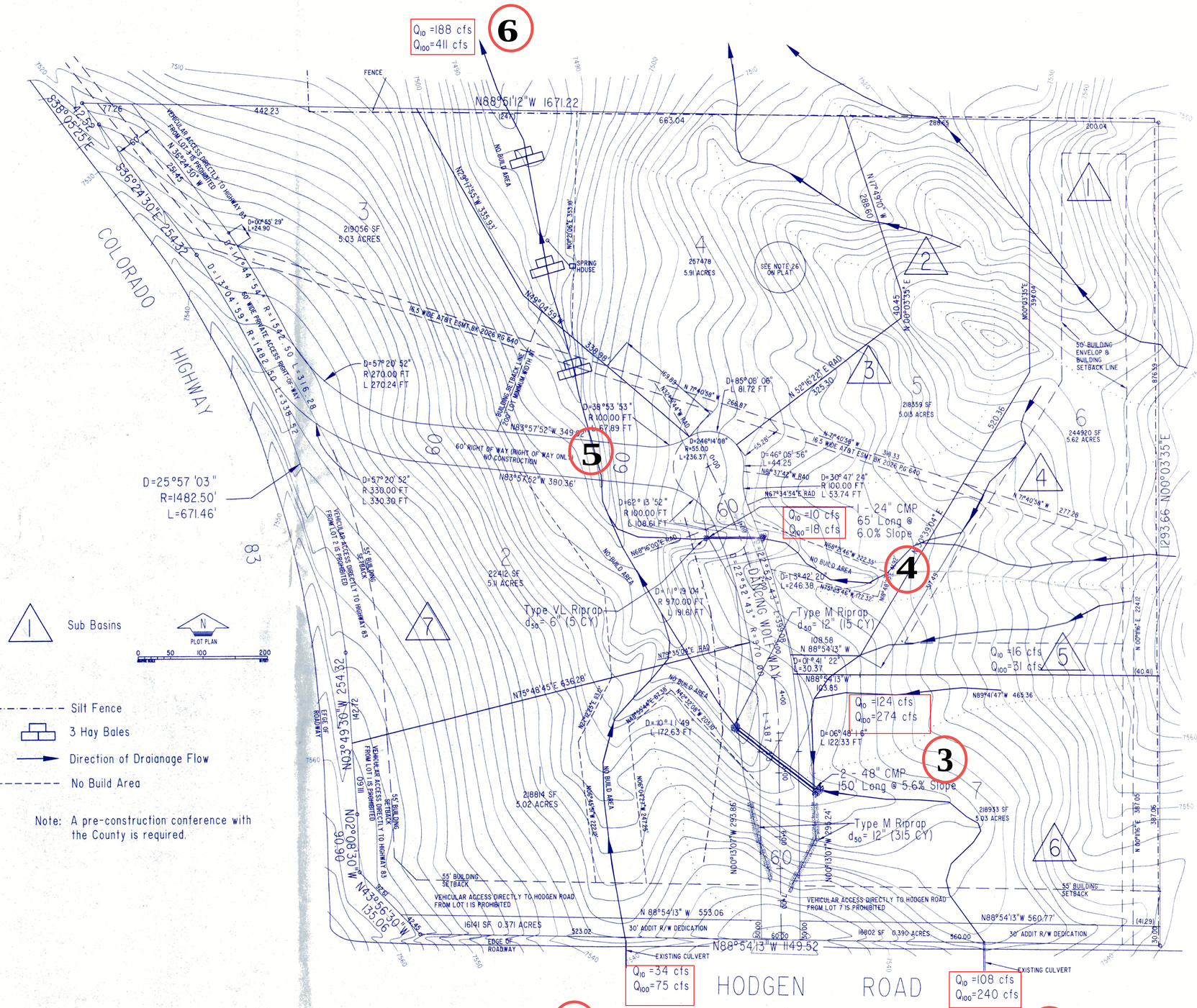

Sub Basins

PLOT PLAN

Silt Fence

3 Hay Bales

Direction of Drainage Flow

No Build Area

Note: A pre-construction conference with the County is required.

PLAN

Scale: 1"=80'

TYPICAL DESIGN POINTS THAT CORRESPOND WITH DESIGN POINTS IN THE VACATION REPLAT PLAN OF AUGUST 2020.

The storm drainage flows on this original drainage plan were used as a guide to evaluate the flow through the drainage way. The 10 and 100 year flow are highlighted with a rectangle on this plan for easier reference. The design points that correspond with the vacation/replat drainage plan are nubers inside circles.

Sandee Miller, P.E.
August, 2020

REVISED 17 Sept. 1996
DRAWN mjl
CHECKED pdw
DATE 30 April 1996

SHEET TITLE: Final Drainage & Erosion Control Plan

PROJECT NAME: Dancing Wolf Estates
El Paso County, CO

PHIL WEINERT ENGINEERING
ENGINEERING & CONSTRUCTION SERVICES
6755 EARL DRIVE, SUITE 105
COLORADO SPRINGS, COLORADO 80918
(719) 548 - 5019

SHEET 2 OF 4

PROJECT NO. 960089d.DWG

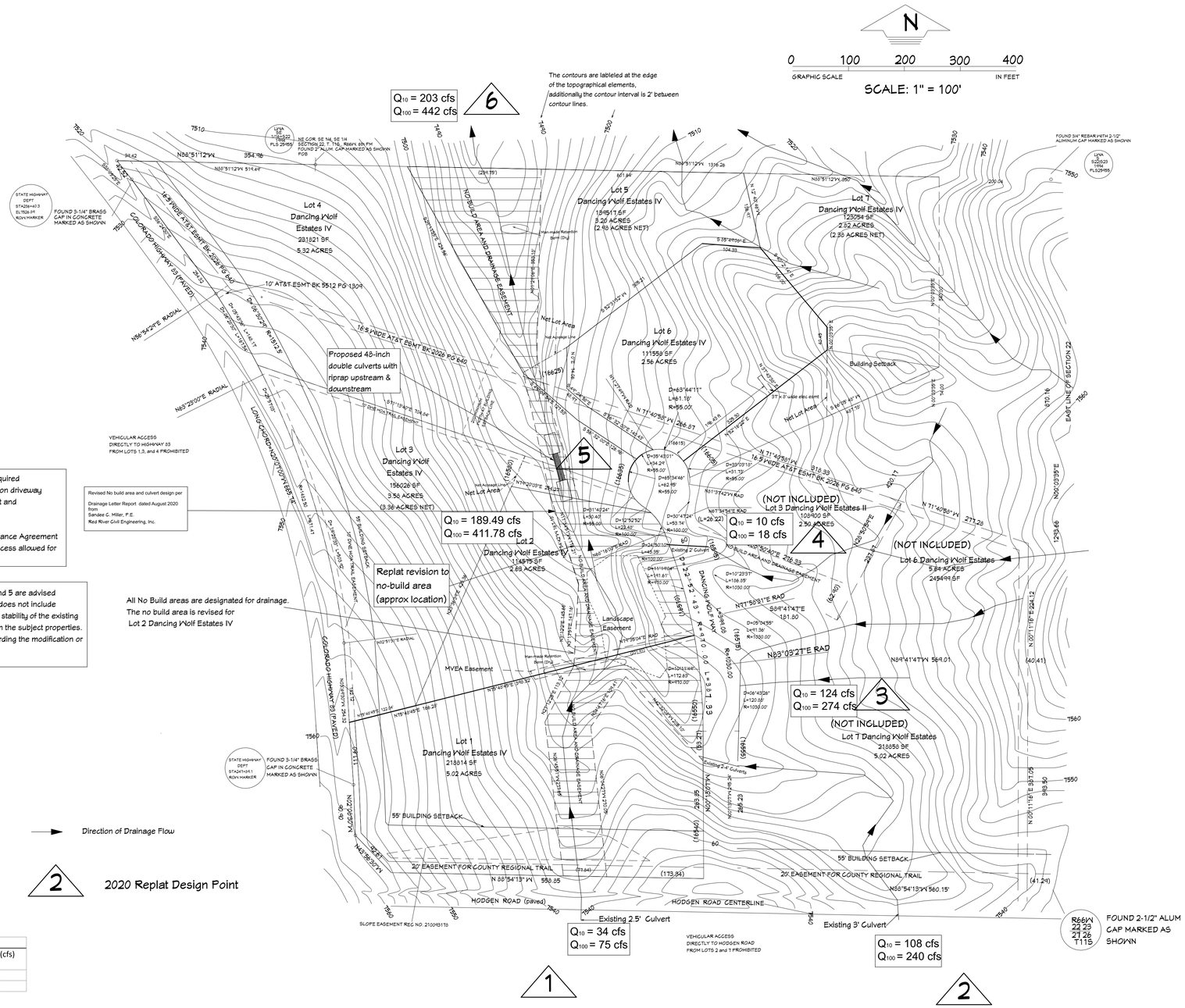

For Lots 3 & 4 an engineered site plan is required as it relates to the construction of the common driveway as identified in the approved drainage report and per LDC code 6.3.3.C.2 and 6.3.3.C.3.

Common Driveway Agreement and Maintenance Agreement recorded as noted on plat and is the only access allowed for Lots 3 & 4.

Notice: current or future owners of lots 1 and 5 are advised that El Paso County's approval of this plat does not include certification of water rights or the structural stability of the existing dry stock pond or retention berm located on the subject properties. The state of Colorado has jurisdiction regarding the modification or elimination of the dry stock pond.

All No Build areas are designated for drainage. The no build area is revised for Lot 2 Dancing Wolf Estates IV

Hydrology for Replatted Lots in DWE IV			
BASIN	AREA (ACRES)	Q_{10} (CFS)	Q_{100} (CFS)
DWE IV L2	2.63	2.01	6.29
DWE IV L3	3.58	2.52	8.30
DWE IV L4	5.32	3.52	12.19
DWE IV L5	3.20	2.41	7.82
DWE IV L6	2.56	2.05	6.40
DWE IV L7	2.82	2.39	7.58

Total Runoff (cfs) for Lots 3 & 4 Driveway Culvert Design & Analysis at Design Point 5 (DP5)					
Runoff Return Period	DP 1	DP 3	DP 4	Lots 1/2/3	DP5 TOTAL (cfs)
Q_{10}	34.00	124.00	10.00	21.49	189.49
Q_{100}	75.00	274.00	18.00	44.78	411.78

Culvert Requirements at Design Point 5 (DP5)								
	Size (inch)	Number	Length (ft)	Width (ft)	Invert In	Invert Out	Maximum Driveway Elevation above Culverts	Design Maximum Headwater Elevation
CMP Culverts	48	2	50		7495	7493.5	7501 for 40' along driveway	7502
Riprap	D50=24		21	27