BRANDING IRON AT STERLING RANCH FILING NO. 2

COUNTY OF EL PASO, STATE OF COLORADO

FINAL GRADING/EROSION CONTROL PLANS

MAY 2020

STANDARD CONSTRUCTION NOTES:

1. ALL DRAINAGE AND ROADWAY CONSTRUCTION SHALL MEET THE STANDARDS AND SPECIFICATIONS OF THE CITY OF COLORADO SPRINGS/EL PASO COUNTY DRAINAGE CRITERIA MANUAL VOLUMES 1 AND 2, AND THE EL PASO COUNTY ENGINEERING CRITERIA MANUAL.

2. CONTRACTOR SHALL BE RESPONSIBLE FOR THE NOTIFICATION AND FIELD LOCATION OF ALL EXISTING UTILITIES, WHETHER SHOWN ON THE PLANS OR NOT, BEFORE BEGINNING CONSTRUCTION. LOCATION OF EXISTING UTILITIES SHALL BE VERIFIED BY THE CONTRACTOR PRIOR TO CONSTRUCTION. CALL 811 TO CONTACT THE UTILITY NOTIFICATION CENTER OF COLORADO SPRINGS.

3. CONTRACTOR SHALL KEEP A COPY OF THESE APPROVED PLANS, THE GRADING AND EROSION CONTROL PLAN, THE STORMWATER MANAGEMENT PLAN (SWMP), THE SOILS AND GEOTECHNICAL REPORT AND THE APPROPRIATE DESIGN AND CONSTRUCTION STANDARDS AND SPECIFICATIONS AT THE JOB SITE AT ALL TIME INCLUDING THE FOLLOWING:
   - 3.1 EL PASO COUNTY ENGINEERING CRITERIA MANUAL (ECM)
   - 3.2 CITY OF COLORADO SPRINGS/EL PASO COUNTY ENGINEERING CRITERIA MANUAL VOLUMES 1 AND 2.
   - 3.3 COLORADO DEPARTMENT OF TRANSPORTATION (CDOT) STANDARDS SPECIFICATION FOR ROAD AND BRIDGE CONSTRUCTION.
   - 3.4 CDOT M&S STANDARDS.

4. IT IS THE DESIGN ENGINEERS RESPONSIBILITY TO ACCURACY SHOW EXISTING CONDITION BOTH ONSITE AND OFFSITE ON THE CONSTRUCTION PLANS. ANY MODIFICATION NECESSARY DUE TO CONFLICT OMISSIONS OR CHANGED CONDITIONS WILL BE ENTIRELY THE DEVELOPERS RESPONSIBILITY TO RECTIFY.

5. ONCE THE ESQCP HAS BEEN ISSUED, THE CONTRACTOR MAY INSTALL THE INITIAL STAGE EROSION AND SEDIMENT CONTROL BMPS AS INDICATED ON THE GEC. A PRECONSTRUCTION MEETING BETWEEN THE CONTRACTOR, ENGINEER, AND EL PASO COUNTY WILL BE HELD PRIOR TO ANY CONSTRUCTION. IT IS THE RESPONSIBILITY OF THE APPLICANT TO COORDINATE THE MEETING TIME AND PLACE WITH COUNTY PCD INSPECTIONS STAFF.

6. IT IS THE CONTRACTORS RESPONSIBILITY TO UNDERSTAND THE REQUIREMENTS OF ALL JURISDICTIONAL AGENCIES AND TO OBTAIN ALL REQUIRED PERMITS, INCLUDING BUT NOT LIMITED TO EL PASO COUNTY EROSION AND STORM WATER QUALITY CONTROL PERMIT (ESQCP), US ARMY CORPS OF ENGINEER ISSUED 401 AND/OR 404 PERMITS AND COUNTY AND STATE FUGITIVE DUST PERMITS.

7. ALL CONSTRUCTION TRAFFIC MUST ENTER/EXIT THE CONSTRUCTION SITE AT APPROVED CONSTRUCTION ACCESS POINTS.

8. ANY TEMPORARY SIGNAGE AND STRIPING SHALL COMPLY WITH EL PASO COUNTY DOW AND MUTCD CRITERIA.

9. CONTRACTOR SHALL OBTAIN ANY PERMITS REQUIRE BY EL PASO COUNTY DOT INCLUDING WORK WITHIN THE RIGHT-OF-WAY AND SPECIAL TRANSPORT PERMITS.

10. THE LIMITS OF CONSTRUCTION SHALL REMAIN WITHIN THE PROPERTY LINE UNLESS OTHERWISE NOTED. THE OWNER/DEVELOPER SHALL OBTAIN WRITTEN PERMISSION AND EASEMENTS, WHERE REQUIRED, FROM ADJOINING PROPERTY OWNER(S) PRIOR TO ANY OFFSITE DISTURBANCE GRADING, OR CONSTRUCTION.

GRADING AND EROSION CONTROL NOTES:

1. STORMWATER DISCHARGES FROM CONSTRUCTION SITES SHALL NOT CAUSE OR THREATEN TO CAUSE POLLUTION, CONTAMINATION, OR DEGRADATION OF STATE WATERS. ALL WORK AND EARTH DISTURBANCE SHALL BE DONE IN A MANNER THAT MINIMIZES POLLUTION OF ANY ON-SITE OR OFF-SITE WATERS, INCLUDING WETLANDS.

2. NOTWITHSTANDING ANYTHING DEPICTED IN THESE PLANS IN WORDS OR GRAPHIC REPRESENTATION, ALL DESIGN AND CONSTRUCTION RELATED TO ROADS, STORM DRAINAGE AND EROSION CONTROL SHALL CONFORM TO THE STANDARDS AND REQUIREMENTS OF THE MOST RECENT VERSION OF THE RELEVANT ADOPTED EL PASO COUNTY STANDARDS, INCLUDING THE LAND DEVELOPMENT CODE, THE ENGINEERING CRITERIA MANUAL, THE DRAINAGE CRITERIA MANUAL, AND THE DRAINAGE CRITERIA MANUAL VOLUME 2. ANY DEVIATIONS FROM REGULATIONS AND STANDARDS MUST BE REQUESTED, AND APPROVED, IN WRITING.

3. A SEPARATE STORMWATER MANAGEMENT PLAN (SMWP) FOR THIS PROJECT SHALL BE COMPLETED AND AN EROSION AND STORMWATER QUALITY CONTROL PERMIT (ESQCP) ISSUED PRIOR TO COMMENCING CONSTRUCTION. MANAGEMENT OF THE SWMP DURING CONSTRUCTION IS THE RESPONSIBILITY OF THE DESIGNATED QUALIFIED STORMWATER MANAGER OR CERTIFIED EROSION CONTROL INSPECTOR. THE SWMP SHALL BE LOCATED ON SITE AT ALL TIMES DURING CONSTRUCTION AND SHALL BE KEPT UP TO DATE WITH WORK PROGRESS AND CHANGES IN THE FIELD.

4. ONCE THE ESQCP IS APPROVED AND A "NOTICE TO PROCEED" HAS BEEN ISSUED, THE CONTRACTOR MAY INSTALL THE INITIAL STAGE EROSION AND SEDIMENT CONTROL MEASURES AS INDICATED ON THE APPROVED GEC. A PRECONSTRUCTION MEETING BETWEEN THE CONTRACTOR, ENGINEER, AND EL PASO COUNTY WILL BE HELD PRIOR TO ANY CONSTRUCTION. IT IS THE RESPONSIBILITY OF THE APPLICANT TO COORDINATE THE MEETING TIME AND PLACE WITH COUNTY STAFF.

5. CONTROL MEASURES MUST BE INSTALLED PRIOR TO COMMENCEMENT OF ACTIVITIES THAT COULD CONTRIBUTE POLLUTANTS TO STORMWATER. CONTROL MEASURES FOR ALL SLOPES, CHANNELS, DITCHES, AND DISTURBED LAND AREAS SHALL BE INSTALLED IMMEDIATELY UPON COMPLETION OF THE DISTURBANCE.

6. ALL TEMPORARY SEDIMENT AND EROSION CONTROL MEASURES SHALL BE MAINTAINED AND REMAIN IN EFFECTIVE OPERATING CONDITION UNTIL PERMANENT SOIL EROSION CONTROL MEASURES ARE IMPLEMENTED AND FINAL STABILIZATION IS ESTABLISHED. ALL PERSONS ENGAGED IN LAND DISTURBANCE ACTIVITIES SHALL ASSESS THE ADEQUACY OF CONTROL MEASURES AT THE SITE AND IDENTIFY IF CHANGES TO THOSE CONTROL MEASURES ARE NEEDED TO ENSURE THE CONTINUED EFFECTIVE PERFORMANCE OF THE CONTROL MEASURES. ALL CHANGES TO TEMPORARY SEDIMENT AND EROSION CONTROL MEASURES MUST BE INCORPORATED INTO THE STORMWATER MANAGEMENT PLAN.

7. TEMPORARY STABILIZATION SHALL BE IMPLEMENTED ON DISTURBED AREAS AND STOCKPILES WHERE GROUND DISTURBING CONSTRUCTION ACTIVITY HAS PERMANENTLY CEASED OR TEMPORARILY CEASED FOR LONGER THAN 14 DAYS.

8. FINAL STABILIZATION MUST BE IMPLEMENTED AT ALL APPLICABLE CONSTRUCTION SITES. FINAL STABILIZATION IS ACHIEVED WHEN ALL GROUND DISTURBING ACTIVITIES ARE COMPLETE AND ALL DISTURBED AREAS EITHER HAVE A UNIFORM VEGETATIVE COVER WITH INDIVIDUAL PLANT DENSITY OF 70 PERCENT OF PRE-DISTURBANCE LEVELS ESTABLISHED OR EQUIVALENT PERMANENT ALTERNATIVE STABILIZATION METHOD IS IMPLEMENTED. ALL TEMPORARY SEDIMENT AND EROSION CONTROL MEASURES SHALL BE REMOVED UPON FINAL STABILIZATION AND BEFORE PERMIT CLOSURE.

9. ALL PERMANENT STORMWATER MANAGEMENT FACILITIES SHALL BE INSTALLED AS DESIGNED IN THE APPROVED PLANS. ANY PROPOSED CHANGES THAT EFFECT THE DESIGN OR FUNCTION OF PERMANENT STORMWATER MANAGEMENT STRUCTURES MUST BE APPROVED BY THE ECM ADMINISTRATOR PRIOR TO IMPLEMENTATION.

10. EARTH DISTURBANCES SHALL BE CONDUCTED IN SUCH A MANNER SO AS TO EFFECTIVELY MINIMIZE ACCELERATED SOIL EROSION AND RESULTING SEDIMENTATION. ALL DISTURBANCES SHALL BE DESIGNED, CONSTRUCTED, AND COMPLETED SO THAT THE EXPOSED AREA OF ANY DISTURBED LAND SHALL BE LIMITED TO THE SHORTEST PRACTICAL PERIOD OF TIME. PRE-EXISTING VEGETATION SHALL BE PROTECTED AND MAINTAINED WITHIN 50 HORIZONTAL FEET OF A WATERS OF THE STATE UNLESS SHOWN TO BE INFEASIBLE AND SPECIFICALLY REQUESTED AND APPROVED.

11. COMPACTION OF SOIL MUST BE PREVENTED IN AREAS DESIGNATED FOR INFILTRATION CONTROL MEASURES OR WHERE FINAL STABILIZATION WILL BE ACHIEVED BY VEGETATIVE COVER. AREAS DESIGNATED FOR INFILTRATION CONTROL MEASURES SHALL ALSO BE PROTECTED FROM SEDIMENTATION DURING CONSTRUCTION UNTIL FINAL STABILIZATION IS ACHIEVED. IF COMPACTION PREVENTION IS NOT FEASIBLE DUE TO SITE CONSTRAINTS, ALL AREAS DESIGNATED FOR INFILTRATION AND VEGETATION CONTROL MEASURES MUST BE LOOSENED PRIOR TO INSTALLATION OF THE CONTROL MEASURE(S).

12. ANY TEMPORARY OR PERMANENT FACILITY DESIGNED AND CONSTRUCTED FOR THE CONVEYANCE OF STORMWATER AROUND, THROUGH, OR FROM THE EARTH DISTURBANCE AREA SHALL BE A STABILIZED CONVEYANCE DESIGNED TO MINIMIZE EROSION AND THE DISCHARGE OF SEDIMENT OFF SITE.

13. CONCRETE WASH WATER SHALL BE CONTAINED AND DISPOSED OF IN ACCORDANCE WITH THE SWMP. NO WASH WATER SHALL BE DISCHARGED TO OR ALLOWED TO ENTER STATE WATERS, INCLUDING ANY SURFACE OR SUBSURFACE STORM DRAINAGE SYSTEM OR FACILITIES. CONCRETE WASHOUTS SHALL NOT BE LOCATED IN AN AREA WHERE SHALLOW GROUNDWATER MAY BE PRESENT, OR WITHIN 50 FEET OF A SURFACE WATER BODY, CREEK OR STREAM.

14. DURING DEWATERING OPERATIONS OF UNCONTAMINATED GROUND WATER MAY BE DISCHARGED ON SITE, BUT SHALL NOT LEAVE THE SITE IN THE FORM OF SURFACE RUNOFF UNLESS AN APPROVED STATE DEWATERING PERMIT IS IN PLACE.

15. EROSION CONTROL BLANKETING OR OTHER PROTECTIVE COVERING SHALL BE USED ON SLOPES STEEPER THAN 3:1.

16. CONTRACTOR SHALL BE RESPONSIBLE FOR THE REMOVAL OF ALL WASTES FROM THE CONSTRUCTION SITE FOR DISPOSAL IN ACCORDANCE WITH LOCAL AND STATE REGULATORY REQUIREMENTS. NO CONSTRUCTION DEBRIS, TREE SLASH, BUILDING MATERIAL WASTES OR UNUSED BUILDING MATERIALS SHALL BE BURIED, DUMPED, OR DISCHARGED AT THE SITE.

17. WASTE MATERIALS SHALL NOT BE TEMPORARILY PLACED OR STORED IN THE STREET, ALLEY, OR OTHER PUBLIC WAY, UNLESS IN ACCORDANCE WITH AN APPROVED TRAFFIC CONTROL PLAN. CONTROL MEASURES MAY BE REQUIRED BY EL PASO COUNTY ENGINEERING IF DEEMED NECESSARY, BASED ON SPECIFIC CONDITIONS AND CIRCUMSTANCES.

18. TRACKING OF SOILS AND CONSTRUCTION DEBRIS OFF-SITE SHALL BE MINIMIZED. MATERIALS TRACKED OFF-SITE SHALL BE CLEANED UP AND PROPERLY DISPOSED OF IMMEDIATELY.

19. THE OWNER/DEVELOPER SHALL BE RESPONSIBLE FOR THE REMOVAL OF ALL CONSTRUCTION DEBRIS, DIRT, TRASH, ROCK, SEDIMENT, SOIL, AND SAND THAT MAY ACCUMULATE IN ROADS, STORM DRAINS AND OTHER DRAINAGE CONVEYANCE SYSTEMS AND STORMWATER APPURTENANCES AS A RESULT OF SITE DEVELOPMENT.

20. THE QUANTITY OF MATERIALS STORED ON THE PROJECT SITE SHALL BE LIMITED, AS MUCH AS PRACTICAL, TO THAT QUANTITY REQUIRED TO PERFORM THE WORK IN AN ORDERLY SEQUENCE. ALL MATERIALS STORED ON-SITE SHALL BE STORED IN A NEAT, ORDERLY MANNER, IN THEIR ORIGINAL CONTAINERS, WITH ORIGINAL MANUFACTURER'S LABELS.

21. NO CHEMICAL(S) HAVING THE POTENTIAL TO BE RELEASED IN STORMWATER ARE TO BE STORED OR USED ONSITE UNLESS PERMISSION FOR THE USE OF SUCH CHEMICAL(S) IS GRANTED IN WRITING BY THE ECM ADMINISTRATOR. IN GRANTING APPROVAL FOR THE USE OF SUCH CHEMICAL(S), SPECIAL CONDITIONS AND MONITORING MAY BE REQUIRED.

22. BULK STORAGE OF ALLOWED PETROLEUM PRODUCTS OR OTHER ALLOWED LIQUID CHEMICALS IN EXCESS OF 55 GALLONS SHALL REQUIRE ADEQUATE SECONDARY CONTAINMENT PROTECTION TO CONTAIN ALL SPILLS ONSITE AND TO PREVENT ANY SPILLED MATERIALS FROM ENTERING STATE WATERS, ANY SURFACE OR SUBSURFACE STORM DRAINAGE SYSTEM OR OTHER FACILITIES.

23. NO PERSON SHALL CAUSE THE IMPEDIMENT OF STORMWATER FLOW IN THE CURB AND GUTTER OR DITCH EXCEPT WITH APPROVED SEDIMENT CONTROL MEASURES.

24. OWNER/DEVELOPER AND THEIR AGENTS SHALL COMPLY WITH THE "COLORADO WATER QUALITY CONTROL ACT" (TITLE 25, ARTICLE 8, CRS), AND THE "CLEAN WATER ACT" (33 USC 1344), IN ADDITION TO THE REQUIREMENTS OF THE LAND DEVELOPMENT CODE, DCM VOLUME II AND THE ECM APPENDIX I. ALL APPROPRIATE PERMITS MUST BE OBTAINED BY THE CONTRACTOR PRIOR TO CONSTRUCTION (1041, NPDES, FLOODPLAIN, 404, FUGITIVE DUST, ETC.). IN THE EVENT OF CONFLICTS BETWEEN THESE REQUIREMENTS AND OTHER LAWS, RULES, OR REGULATIONS OF OTHER FEDERAL, STATE, LOCAL, OR COUNTY AGENCIES, THE MOST RESTRICTIVE LAWS, RULES, OR REGULATIONS SHALL APPLY.

25. ALL CONSTRUCTION TRAFFIC MUST ENTER/EXIT THE SITE ONLY AT APPROVED CONSTRUCTION ACCESS POINTS.

26. PRIOR TO CONSTRUCTION THE PERMITTEE SHALL VERIFY THE LOCATION OF EXISTING UTILITIES.

27. A WATER SOURCE SHALL BE AVAILABLE ON SITE DURING EARTHWORK OPERATIONS AND SHALL BE UTILIZED AS REQUIRED TO MINIMIZE DUST FROM EARTHWORK EQUIPMENT AND WIND.

28. THE SOILS REPORT FOR THIS SITE HAS BEEN PREPARED BY ENTECH ENGINEERING, INC., ENTITLED GEOLOGIC HAZARD/LAND STUDY AND PRELIMINARY SUBSURFACE SOIL INVESTIGATION STERLING RANCH, DATED OCTOBER 31, 2006, AND SHALL BE CONSIDERED A PART OF THESE PLANS.

29. AT LEAST TEN (10) DAYS PRIOR TO THE ANTICIPATED START OF CONSTRUCTION, FOR PROJECTS THAT WILL DISTURB ONE (1) ACRE OR MORE, THE OWNER OR OPERATOR OF CONSTRUCTION ACTIVITY SHALL SUBMIT A PERMIT APPLICATION FOR STORMWATER DISCHARGE TO THE COLORADO DEPARTMENT OF PUBLIC HEALTH AND ENVIRONMENT, WATER QUALITY DIVISION. THE APPLICATION CONTAINS CERTIFICATION OF COMPLETION OF A STORMWATER MANAGEMENT PLAN (SWMP), OF WHICH THIS GRADING AND EROSION CONTROL PLAN MAY BE A PART. FOR INFORMATION OR APPLICATION MATERIALS CONTACT:

COLORADO DEPARTMENT OF PUBLIC HEALTH AND ENVIRONMENT
WATER QUALITY CONTROL DIVISION
WQCD - PERMITS
4300 CHERRY CREEK DRIVE SOUTH
DENVER, CO 80246-1530
ATTN: PERMITS UNIT

EXISTING VEGETATION: THE SITE ORIGINALLY CONSISTED OF PRAIRIE GRASSES AND SHRUBS. NO OTHER NOTABLE VEGETATION EXISTED. THE SITE IS PROPOSED FOR SINGLE FAMILY SUBDIVISION. IF THE SUBDIVISION IS NOT COMPLETED, THE ENTIRE SITE SHOULD BE RESEEDED PER EPC SPECIFICATIONS. FOR AREAS OUTSIDE OF THE DEVELOPED LOTS, THE GROUND SHOULD BE RESEEDED PER EPC CRITERIA AS SHOWN ON THE GRADING AND EROSION CONTROL PLAN. THE VEGETATION SHOULD BE VISUALLY INSPECTED TO EXCEED THE AMOUNT OF VEGETATION THAT EXISTS IN NON-DISTURBED AREAS AROUND THE SITE.

FOR CONSTRUCTION DRAWINGS AND DETAILS, SEE SAND CREEK BANK STABILIZATION PLAN & STORM SEWER PLANS FOR BRANDING IRON AT SR FILING NO.2, BY M&S CIVIL CONSULTANTS, INC.

SAND CREEK CHANNEL IMPROVEMENT PLAN IS FORTHCOMING PROVIDED BY KIOWA ENGINEERING. THESE PLANS WILL DEPICT THE IMPROVEMENTS TO SAND CREEK CHANNEL, THE FINAL TRAIL LOCATION AND MAINTENANCE ACCESS LOCATIONS FOR THE SAND CREEK DRAINAGE STRUCTURES.

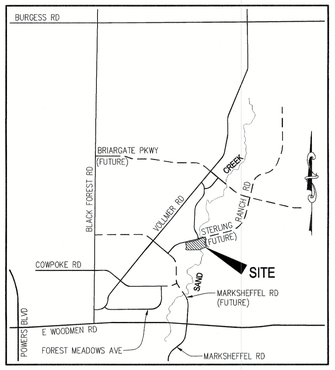

VICINITY MAP
N.T.S.

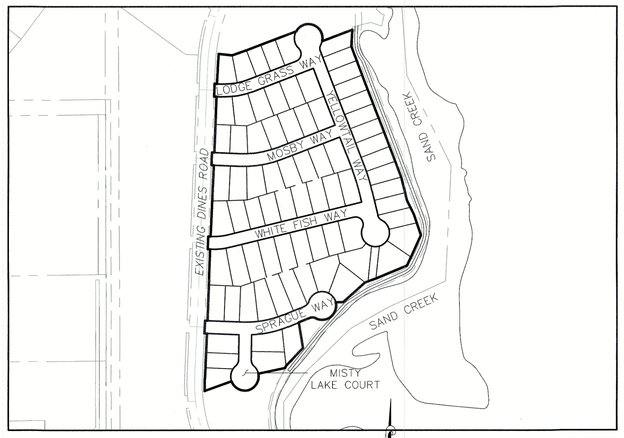

SITE MAP
N.T.S.

ADDITIONAL NOTES:

STAGING AREA TO BE DETERMINED BY CONTRACTOR IN THE FIELD. THE LOCATIONS SHALL BE DELINEATED ON THIS PLAN BY THE CONTRACTOR.

THE EROSION CONTROL DELINEATED ON THIS PLAN SHALL BE REGULARLY UPDATED BY THE CONTRACTOR.

TEMPORARY SEDIMENT TRAP LOCATIONS WILL BE DETERMINED BY THE CONTRACTOR IN THE FIELD.

EXISTING SITE TERRIAN GENERALLY SLOPES FROM NORTH TO SOUTHWEST AT GRADE RATES THAT VARY BETWEEN 2% TO 6%.

THERE ARE NO BATCH PLANTS ON SITE.

AREAS LEFT OPEN FOR 30 DAYS OR MORE, OTHER THAN FOR UTILITY AND DRAINAGE CONSTRUCTION SHALL BE SEEDED AND/OR MULCHED.

NO PORTION OF THIS PROPERTY IS LOCATED WITHIN A DESIGNATED FEMA FLOODPLAIN IN ACCORDANCE WITH FLOOD INSURANCE RATE MAPS (FIRM) 08041C0533G, EFFECTIVE DATE DECEMBER 7, 2018.

BENCHMARKS

1. THE TOP OF AN ALUMINUM SURVEYORS CAP, STAMPED "9853", AT THE SOUTHEAST BOUNDARY CORNER OF BARBARICK SUBDIVISION
   NORTHING = 411416.273
   EASTING = 235167.071
   ELEVATION = 7023.42
2. THE TOP OF A RED PLASTIC SURVEYORS CAP, ILLEGIBLE, AT THE NORTHWEST BOUNDARY CORNER OF PAWNEE RANCHEROS SUBDIVISION
   NORTHING = 410095.404
   EASTING = 235052.131
   ELEVATION = 7000.40
3. THE TOP OF A RED PLASTIC SURVEYORS CAP, STAMPED "38141", AT THE SOUTHWEST BOUNDARY CORNER OF BARBARICK SUBDIVISION
   NORTHING = 411399.962
   EASTING = 233849.817
   ELEVATION = 7030.82

AGENCIES

OWNER/DEVELOPER:	SR LAND, LLC 20 BOULDER CRESCENT, SUITE 201 COLORADO SPRINGS, CO 80903 JIM MORLEY (719) 598-5192
CIVIL ENGINEER:	M & S CIVIL CONSULTANTS, INC. 102 E. PIKES PEAK AVENUE, 5TH FLOOR COLORADO SPRINGS, CO 80903 VIRGIL A. SANCHEZ P.E. (719) 955-5485
COUNTY ENGINEERING:	EL PASO COUNTY PLANNING AND COMMUNITY DEVELOPMENT 2880 INTERNATIONAL CIRCLE, SUITE 110 COLORADO SPRINGS, CO 80910 JEFF RICE, P.E. (719) 520-6300
TRAFFIC ENGINEERING:	EL PASO COUNTY DEPARTMENT OF PUBLIC WORKS 3275 AKERS DRIVE COLORADO SPRINGS, CO 80922 JENNIFER IRVINE, P.E. (719) 520-6460
WATER RESOURCES:	STERLING RANCH METRO DISTRICT ENGINEERS JDS-HYDRO CONSULTANTS 545 E. PIKES PEAK AVE., SUITE 300 COLORADO SPRINGS, CO 80903 JOHN MCGINN (719) 668-8769
FIRE DISTRICT:	BLACK FOREST FIRE PROTECTION DISTRICT 11445 TEACHOUT ROAD COLORADO SPRINGS, CO 80908 CHIEF BRYAN JACK (719) 495-4300
GAS DEPARTMENT:	COLORADO SPRINGS UTILITIES 7710 DURANT DR. COLORADO SPRINGS, CO 80947 TIM WENDT (719) 668-3556
ELECTRIC DEPARTMENT:	MOUNTAIN VIEW ELECTRIC 11140 E. WOODMEN ROAD FALCON, CO 80831 (719) 495-2283
COMMUNICATIONS:	QWEST COMMUNICATIONS (U.N.C.C. LOCATORS) (800) 922-1987 AT&T (LOCATORS) (719) 635-3674

ENGINEER'S STATEMENT:

THIS GRADING AND EROSION CONTROL PLAN WAS PREPARED UNDER MY DIRECTION AND SUPERVISION AND IS CORRECT TO THE BEST OF MY KNOWLEDGE AND BELIEF. SAID PLAN HAS BEEN PREPARED ACCORDING TO THE CRITERIA ESTABLISHED BY THE COUNTY FOR GRADING AND EROSION CONTROL PLANS. I ACCEPT RESPONSIBILITY FOR ANY LIABILITY CAUSED BY ANY NEGLIGENT ACTS, ERRORS OR OMISSIONS ON MY PART IN PREPARING THIS PLAN.

VIRGIL A. SANCHEZ, COLORADO P.E. NO. 37160 DATE
FOR AND ON BEHALF OF M&S CIVIL CONSULTANTS, INC.

DEVELOPER'S STATEMENT:

I, THE OWNER/DEVELOPER HAVE READ AND WILL COMPLY WITH THE REQUIREMENTS OF THE GRADING AND EROSION CONTROL PLAN.

JAMES F. MORLEY 3-31-2020
SR LAND, LLC DATE
20 BOULDER CRESCENT, SUITE 201
COLORADO SPRINGS, CO 80903
(719) 471-1742

EL PASO COUNTY:

COUNTY PLAN REVIEW IS PROVIDED ONLY FOR GENERAL CONFORMANCE WITH COUNTY DESIGN CRITERIA. THE COUNTY IS NOT RESPONSIBLE FOR THE ACCURACY AND ADEQUACY OF THE DESIGN, DIMENSIONS, AND/OR ELEVATIONS WHICH SHALL BE CONFIRMED AT THE JOB SITE. THE COUNTY THROUGH THE APPROVAL OF THIS DOCUMENT ASSUMES NO RESPONSIBILITY FOR COMPLETENESS AND/OR ACCURACY OF THIS DOCUMENT.

FILED IN ACCORDANCE WITH THE REQUIREMENTS OF THE EL PASO COUNTY LAND DEVELOPMENT CODE, DRAINAGE CRITERIA MANUAL VOLUMES 1 AND 2, AND ENGINEERING CRITERIA MANUAL AS AMENDED.

IN ACCORDANCE WITH ECM SECTION 1.12, THESE CONSTRUCTION DOCUMENTS WILL BE VALID FOR CONSTRUCTION FOR A PERIOD OF 2 YEARS FROM THE DATE SIGNED BY THE EL PASO COUNTY ENGINEER. IF CONSTRUCTION HAS NOT STARTED WITHIN THOSE 2 YEARS, THE PLANS WILL NEED TO BE RESUBMITTED FOR APPROVAL, INCLUDING PAYMENT OF REVIEW FEES AT THE PLANNING AND COMMUNITY DEVELOPMENT DIRECTOR'S DISCRETION.

JENNIFER IRVINE, P.E.
COUNTY ENGINEER/ECM ADMINISTRATOR

For File
By: Elizabeth Nijkamp
Date:06/23/2020
El Paso County Planning & Community Development

SHEET INDEX

EL PASO COUNTY FILE NO. SF 19-018

FOR LOCATING & MARKING GAS, ELECTRIC, WATER & TELEPHONE LINES
FOR BURIED UTILITY INFORMATION
48 HRS BEFORE YOU DIG
CALL 1-800-922-1987

BRANDING IRON AT STERLING RANCH FILING NO. 2
GRADING & EROSION CONTROL PLAN
PROJECT NO. 09-012 | DATE: 03/23/2020 | SHEET 1 OF 7 | GR01
DESIGNED BY: DLM | SCALE: HORIZONTAL: N/A
DRAWN BY: JWP | VERTICAL: N/A
CHECKED BY: VAS

102 E. PIKES PEAK AVE. 5TH FLOOR
COLORADO SPRINGS, CO 80903
PHONE: 719.955.5485
CIVIL CONSULTANTS, INC.

FOR AND ON BEHALF OF M&S CIVIL CONSULTANTS, INC.
VIRGIL A. SANCHEZ, COLORADO P.E. NO. 37160

REVISIONS: NO. | DATE | BY | DESCRIPTION | APPR'D. | BY | DATE

THE ENGINEER PREPARING THESE PLANS WILL NOT BE RESPONSIBLE OR LIABLE FOR UNAUTHORIZED CHANGES TO OR USES OF THESE PLANS. ALL CHANGES TO THE PLANS MUST BE IN WRITING AND MUST BE APPROVED BY THE PREPARER OF THESE PLANS.

CAUTION

File: O:\09012A\Challenger East\dwg\Const Dwg\Grading & Erosion Control\GR01.dwg Plotstamp: 3/25/2020 4:36 PM

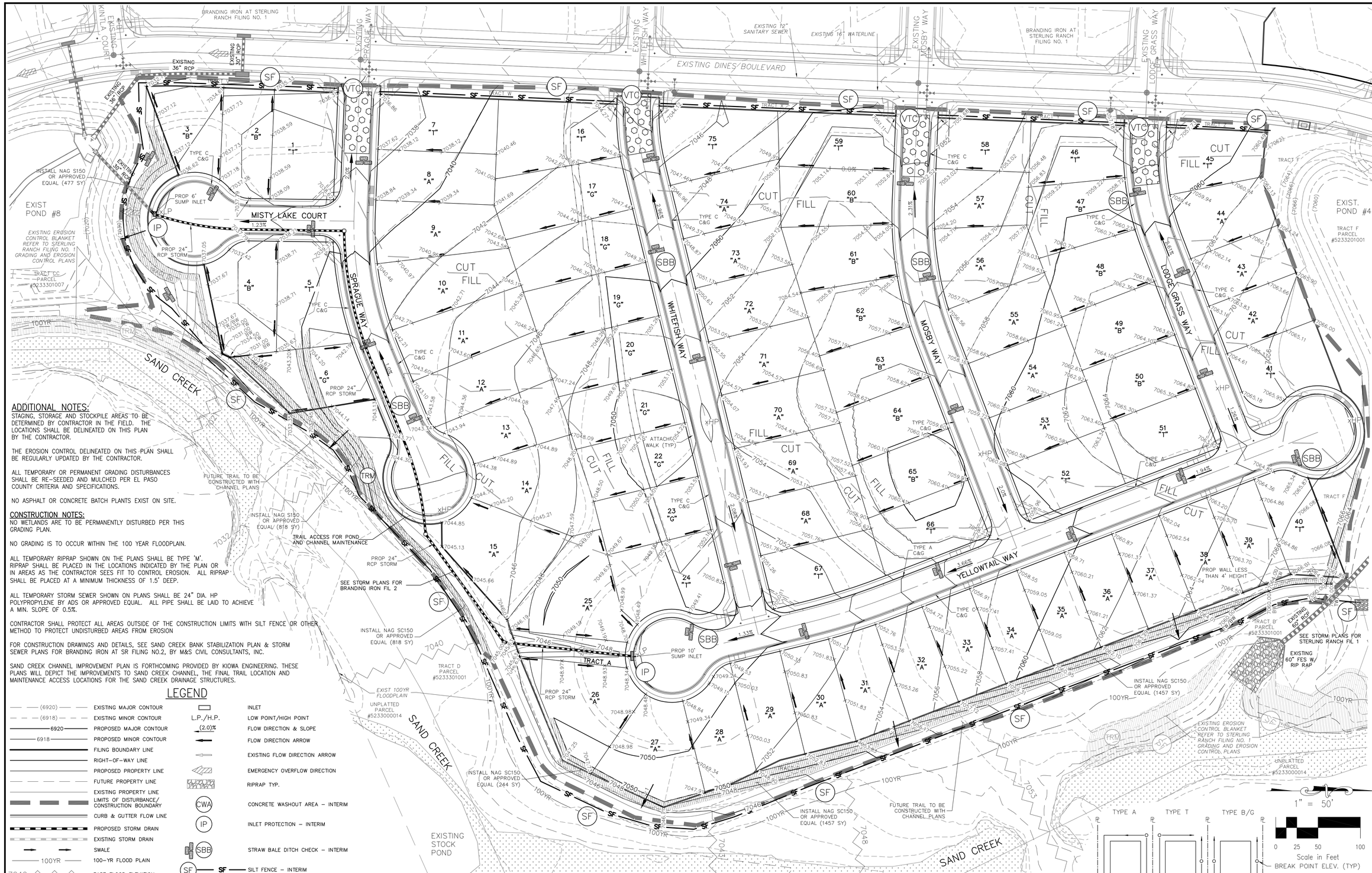

ADDITIONAL NOTES:

STAGING, STORAGE AND STOCKPILE AREAS TO BE DETERMINED BY CONTRACTOR IN THE FIELD. THE LOCATIONS SHALL BE DELINEATED ON THIS PLAN BY THE CONTRACTOR.

THE EROSION CONTROL DELINEATED ON THIS PLAN SHALL BE REGULARLY UPDATED BY THE CONTRACTOR.

ALL TEMPORARY OR PERMANENT GRADING DISTURBANCES SHALL BE RE-SEEDED AND MULCHED PER EL PASO COUNTY CRITERIA AND SPECIFICATIONS.

NO ASPHALT OR CONCRETE BATCH PLANTS EXIST ON SITE.

CONSTRUCTION NOTES:

NO WETLANDS ARE TO BE PERMANENTLY DISTURBED PER THIS GRADING PLAN.

NO GRADING IS TO OCCUR WITHIN THE 100 YEAR FLOODPLAIN.

ALL TEMPORARY RIPRAP SHOWN ON THE PLANS SHALL BE TYPE 'M'. RIPRAP SHALL BE PLACED IN THE LOCATIONS INDICATED BY THE PLAN OR IN AREAS AS THE CONTRACTOR SEES FIT TO CONTROL EROSION. ALL RIPRAP SHALL BE PLACED AT A MINIMUM THICKNESS OF 1.5' DEEP.

ALL TEMPORARY STORM SEWER SHOWN ON PLANS SHALL BE 24" DIA. HP POLYPROPYLENE BY ADS OR APPROVED EQUAL. ALL PIPE SHALL BE LAID TO ACHIEVE A MIN. SLOPE OF 0.5%.

CONTRACTOR SHALL PROTECT ALL AREAS OUTSIDE OF THE CONSTRUCTION LIMITS WITH SILT FENCE OR OTHER METHOD TO PROTECT UNDISTURBED AREAS FROM EROSION

FOR CONSTRUCTION DRAWINGS AND DETAILS, SEE SAND CREEK BANK STABILIZATION PLAN & STORM SEWER PLANS FOR BRANDING IRON AT SR FILING NO.2, BY M&S CIVIL CONSULTANTS, INC.

SAND CREEK CHANNEL IMPROVEMENT PLAN IS FORTHCOMING PROVIDED BY KIOWA ENGINEERING. THESE PLANS WILL DEPICT THE IMPROVEMENTS TO SAND CREEK CHANNEL, THE FINAL TRAIL LOCATION AND MAINTENANCE ACCESS LOCATIONS FOR THE SAND CREEK DRAINAGE STRUCTURES.

LEGEND

(6920)	EXISTING MAJOR CONTOUR
(6918)	EXISTING MINOR CONTOUR
6920	PROPOSED MAJOR CONTOUR
6918	PROPOSED MINOR CONTOUR
	FILING BOUNDARY LINE
	RIGHT-OF-WAY LINE
	PROPOSED PROPERTY LINE
	FUTURE PROPERTY LINE
	EXISTING PROPERTY LINE
	LIMITS OF DISTURBANCE/ CONSTRUCTION BOUNDARY
	CURB & GUTTER FLOW LINE
	PROPOSED STORM DRAIN
	EXISTING STORM DRAIN
	SWALE
100YR	100-YR FLOOD PLAIN
7040	BASE FLOOD ELEVATION
A	TYPE A LOT
B	TYPE B LOT
G	TYPE G LOT
W/O	TYPE G LOT
T	TRANSITION LOT
	EX. WETLANDS
	WETLAND DISTURBANCE
	INLET
L.P./H.P.	LOW POINT/HIGH POINT
(2.0)%	FLOW DIRECTION & SLOPE
	FLOW DIRECTION ARROW
	EXISTING FLOW DIRECTION ARROW
	EMERGENCY OVERFLOW DIRECTION
	RIPRAP TYP.
CWA	CONCRETE WASHOUT AREA – INTERIM
IP	INLET PROTECTION – INTERIM
SBB	STRAW BALE DITCH CHECK – INTERIM
SF — SF	SILT FENCE – INTERIM
VTC	VEHICLE TRACKING CONTROL – INTERIM
TRM	NORTH AMERICAN GREEN SC250 PERMANENT EROSION CONTROL BLANKET (OR APPROVED EQUAL) – PERM
TRM	NORTH AMERICAN GREEN SC150 TEMPORARY EROSION CONTROL BLANKET (OR APPROVED EQUAL) – PERM

FOR LOCATING & MARKING GAS, ELECTRIC, WATER & TELEPHONE LINES

FOR BURIED UTILITY INFORMATION 48 HRS BEFORE YOU DIG CALL 1-800-922-1987

BRANDING IRON AT STERLING RANCH FILING NO. 2

GRADING & EROSION CONTROL PLAN

PROJECT NO. 09-012	DATE: 05/06/2020
DESIGNED BY: DLM	SCALE: HORIZONTAL: 1"=50'
DRAWN BY: JWP	VERTICAL: N/A
CHECKED BY: VAS	SHEET 2 OF 7
	GR02

102 E. PIKES PEAK AVE., 5TH FLOOR
COLORADO SPRINGS, CO 80903
PHONE: 719.955.5485
CIVIL CONSULTANTS, INC.

VIRGIL A. SANCHEZ, COLORADO P.E. NO. 37160

FOR AND ON BEHALF OF M&S CIVIL CONSULTANTS, INC.

REGISTERED PROFESSIONAL ENGINEER VIRGIL A. SANCHEZ 37160 COLORADO

REVISIONS:				APRV'D. BY:	DATE:
NO.	DATE:	BY:	DESCRIPTION:		

THE ENGINEER PREPARING THESE PLANS WILL NOT BE RESPONSIBLE, OR LIABLE FOR, UNAUTHORIZED CHANGES TO OR USES OF THESE PLANS. ALL CHANGES TO THE PLANS MUST BE IN WRITING AND MUST BE APPROVED BY THE PREPARER OF THESE PLANS.

CAUTION

File: O:\09012A\Challenger East\dwg\Const Dwg\Grading & Erosion Control\GR02.dwg Plotstamp: 6/9/2020 12:09 PM

soil amendments and rototill them into the soil to a depth of 6 inches or more.

Topsoil should be salvaged during grading operations for use and spread on areas to be revegetated later. Topsoil should be viewed as an important resource to be utilized for vegetation establishment, due to its water-holding capacity, structure, texture, organic matter content, biological activity, and nutrient content. The rooting depth of most native grasses in the semi-arid Denver metropolitan area is 6 to 18 inches. At a minimum, the upper 6 inches of topsoil should be stripped, stockpiled, and ultimately respread across areas that will be revegetated.

Where topsoil is not available, subsoils should be amended to provide an appropriate plant-growth medium. Organic matter, such as well digested compost, can be added to improve soil characteristics conducive to plant growth. Other treatments can be used to adjust soil pH conditions when needed. Soil testing, which is typically inexpensive, should be completed to determine and optimize the types and amounts of amendments that are required.

If the disturbed ground surface is compacted, rip or rototill the surface prior to placing topsoil. If adding compost to the existing soil surface, rototilling is necessary. Surface roughening will assist in placement of a stable topsoil layer on steeper slopes, and allow infiltration and root penetration to greater depth.

Prior to seeding, the soil surface should be rough and the seedbed should be firm, but neither too loose nor compacted. The upper layer of soil should be in a condition suitable for seeding at the proper depth and conducive to plant growth. Seed-to-soil contact is the key to good germination.

Seed Mix for Temporary Vegetation

To provide temporary vegetative cover on disturbed areas which will not be paved, built upon, or fully landscaped or worked for an extended period (typically 30 days or more), plant an annual grass appropriate for the time of planting and mulch the planted areas. Annual grasses suitable for the Denver metropolitan area are listed in Table TS/PS-1. These are to be considered only as general recommendations when specific design guidance for a particular site is not available. Local governments typically specify seed mixes appropriate for their jurisdiction.

Seed Mix for Permanent Revegetation

To provide vegetative cover on disturbed areas that have reached final grade, a perennial grass mix should be established. Permanent seeding should be performed promptly (typically within 14 days) after reaching final grade. Each site will have different characteristics and a landscape professional or the local jurisdiction should be contacted to determine the most suitable seed mix for a specific site. In lieu of a specific recommendation, one of the perennial grass mixes appropriate for site conditions and growth season listed in Table TS/PS-2 can be used. The pure live seed (PLS) rates of application recommended in these tables are considered to be absolute minimum rates for seed applied using proper drill-seeding equipment.

If desired for wildlife habitat or landscape diversity, shrubs such as rubber rabbitbrush (*Chrysothamnus nauseosus*), fourwing saltbush (*Atriplex canescens*) and skunkbrush sumac (*Rhus trilobata*) could be added to the upland seedmixes at 0.25, 0.5 and 1 pound PLS/acre, respectively. In riparian zones, planting root stock of such species as American plum (*Prunus americana*), woods rose (*Rosa woodsii*), plains cottonwood (*Populus sargentii*), and willow (*Populus spp.*) may be considered. On non-topsoiled upland sites, a legume such as Ladak alfalfa at 1 pound PLS/acre can be included as a source of nitrogen for perennial grasses.

Seeding dates for the highest success probability of perennial species along the Front Range are generally in the spring from April through early May and in the fall after the first of September until the ground freezes. If the area is irrigated, seeding may occur in summer months, as well. See Table TS/PS-3 for appropriate seeding dates.

Table TS/PS-1. Minimum Drill Seeding Rates for Various Temporary Annual Grasses

Species[a] (Common name)	Growth Season[b]	Pounds of Pure Live Seed (PLS)/acre[c]	Planting Depth (inches)
1. Oats	Cool	35 - 50	1 - 2
2. Spring wheat	Cool	25 - 35	1 - 2
3. Spring barley	Cool	25 - 35	1 - 2
4. Annual ryegrass	Cool	10 - 15	½
5. Millet	Warm	3 - 15	½ - ¾
6. Sudangrass	Warm	5–10	½ - ¾
7. Sorghum	Warm	5–10	½ - ¾
8. Winter wheat	Cool	20–35	1 - 2
9. Winter barley	Cool	20–35	1 - 2
10. Winter rye	Cool	20–35	1 - 2
11. Triticale	Cool	25–40	1 - 2

[a] Successful seeding of annual grass resulting in adequate plant growth will usually produce enough dead-plant residue to provide protection from wind and water erosion for an additional year. This assumes that the cover is not disturbed or mowed closer than 8 inches.

Hydraulic seeding may be substituted for drilling only where slopes are steeper than 3:1 or where access limitations exist. When hydraulic seeding is used, hydraulic mulching should be applied as a separate operation, when practical, to prevent the seeds from being encapsulated in the mulch.

[b] See Table TS/PS-3 for seeding dates. Irrigation, if consistently applied, may extend the use of cool season species during the summer months.

[c] Seeding rates should be doubled if seed is broadcast, or increased by 50 percent if done using a Brillion Drill or by hydraulic seeding.

Table TS/PS-2. Minimum Drill Seeding Rates for Perennial Grasses

Common[a] Name	Botanical Name	Growth Season[b]	Growth Form	Seeds/ Pound	Pounds of PLS/acre
Alakali Soil Seed Mix					
Alkali sacaton	*Sporobolus airoides*	Cool	Bunch	1,750,000	0.25
Basin wildrye	*Elymus cinereus*	Cool	Bunch	165,000	2.5
Sodar streambank wheatgrass	*Agropyron riparium 'Sodar'*	Cool	Sod	170,000	2.5
Jose tall wheatgrass	*Agropyron elongatum 'Jose'*	Cool	Bunch	79,000	7.0
Arriba western wheatgrass	*Agropyron smithii 'Arriba'*	Cool	Sod	110,000	5.5
Total					**17.75**
Fertile Loamy Soil Seed Mix					
Ephriam crested wheatgrass	*Agropyron cristatum 'Ephriam'*	Cool	Sod	175,000	2.0
Dural hard fescue	*Festuca ovina 'duriuscula'*	Cool	Bunch	565,000	1.0
Lincoln smooth brome	*Bromus inermis leyss 'Lincoln'*	Cool	Sod	130,000	3.0
Sodar streambank wheatgrass	*Agropyron riparium 'Sodar'*	Cool	Sod	170,000	2.5
Arriba western wheatgrass	*Agropyron smithii 'Arriba'*	Cool	Sod	110,000	7.0
Total					**15.5**
High Water Table Soil Seed Mix					
Meadow foxtail	*Alopecurus pratensis*	Cool	Sod	900,000	0.5
Redtop	*Agrostis alba*	Warm	Open sod	5,000,000	0.25
Reed canarygrass	*Phalaris arundinacea*	Cool	Sod	68,000	0.5
Lincoln smooth brome	*Bromus inermis leyss 'Lincoln'*	Cool	Sod	130,000	3.0
Pathfinder switchgrass	*Panicum virgatum 'Pathfinder'*	Warm	Sod	389,000	1.0
Alkar tall wheatgrass	*Agropyron elongatum 'Alkar'*	Cool	Bunch	79,000	5.5
Total					**10.75**
Transition Turf Seed Mix[c]					
Ruebens Canadian bluegrass	*Poa compressa 'Ruebens'*	Cool	Sod	2,500,000	0.5
Dural hard fescue	*Festuca ovina 'duriuscula'*	Cool	Bunch	565,000	1.0
Citation perennial ryegrass	*Lolium perenne 'Citation'*	Cool	Sod	247,000	3.0
Lincoln smooth brome	*Bromus inermis leyss 'Lincoln'*	Cool	Sod	130,000	3.0
Total					**7.5**

EROSION CONTROL CRITERIA:

EROSION CONTROL MEASURES SHALL BE IMPLEMENTED IN A MANNER THAT WILL PROTECT PROPERTIES AND PUBLIC FACILITIES FROM THE ADVERSE EFFECTS OF EROSION AND SEDIMENTATION AS A RESULT OF CONSTRUCTION AND EARTHWORK ACTIVITIES WITHIN THE PROJECT SITE.

1. PRIOR TO START OF GRADING OPERATIONS, LOCATE AND SET THE SEDIMENT BERM AND VEHICLE TRACKING CONTROL AS SHOWN ON THE EROSION CONTROL PLAN.
2. THE SEDIMENT BERM SHALL BE KEPT IN PLACE AND MAINTAINED UNTIL EROSION AND SEDIMENTATION POTENTIAL IS MITIGATED. REMOVAL OF SILT AND SEDIMENT COLLECTED BY THE SEDIMENT BERM IS REQUIRED ONCE IT REACHES HALF THE HEIGHT OF THE SEDIMENT BERM.
3. EROSION CONTROL DEVICES SHOULD BE CHECKED AFTER EVERY STORM OR NOT MORE THAN EVERY 14 DAYS. REPAIRS OR REPLACEMENT SHOULD BE MADE AS NECESSARY TO MAINTAIN PROPER PROTECTION.

SOIL EROSION CONTROL MEASURES FOR ALL SLOPES, CHANNELS, DITCHES, OR ANY DISTURBED LAND AREA SHALL BE COMPLETED WITHIN TWENTY-ONE (21) CALENDAR DAYS AFTER FINAL GRADING, OR FINAL EARTH DISTURBANCE HAS BEEN COMPLETED. DISTURBED AREAS AND STOCKPILES WHICH ARE NOT AT THE FINAL GRADE BUT WILL REMAIN DORMANT FOR LONGER THAN 30 DAYS SHALL ALSO BE MULCHED WITHIN 21 DAYS AFTER INTERIM GRADING. AN AREA THAT IS GOING TO REMAIN IN AN INTERIM STATE FOR MORE THAN 60 DAYS SHALL ALSO BE SEEDED. ALL TEMPORARY SOIL EROSION CONTROL MEASURES AND BMP'S SHALL BE MAINTAINED UNTIL PERMANENT SOIL EROSION CONTROL MEASURES ARE IMPLEMENTED.

Table TS/PS-2. Minimum Drill Seeding Rates for Perennial Grasses (cont.)

Common Name	Botanical Name	Growth Season[b]	Growth Form	Seeds/ Pound	Pounds of PLS/acre
Sandy Soil Seed Mix					
Blue grama	*Bouteloua gracilis*	Warm	Sod-forming bunchgrass	825,000	0.5
Camper little bluestem	*Schizachyrium scoparium 'Camper'*	Warm	Bunch	240,000	1.0
Prairie sandreed	*Calamovilfa longifolia*	Warm	Open sod	274,000	1.0
Sand dropseed	*Sporobolus cryptandrus*	Cool	Bunch	5,298,000	0.25
Vaughn sideoats grama	*Bouteloua curtipendula 'Vaughn'*	Warm	Sod	191,000	2.0
Arriba western wheatgrass	*Agropyron smithii 'Arriba'*	Cool	Sod	110,000	5.5
Total					**10.25**
Heavy Clay, Rocky Foothill Seed Mix					
Ephriam crested wheatgrass[d]	*Agropyron cristatum 'Ephriam'*	Cool	Sod	175,000	1.5
Oahe Intermediate wheatgrass	*Agropyron intermedium 'Oahe'*	Cool	Sod	115,000	5.5
Vaughn sideoats grama[e]	*Bouteloua curtipendula 'Vaughn'*	Warm	Sod	191,000	2.0
Lincoln smooth brome	*Bromus inermis leyss 'Lincoln'*	Cool	Sod	130,000	3.0
Arriba western wheatgrass	*Agropyron smithii 'Arriba'*	Cool	Sod	110,000	5.5
Total					**17.5**

[a] All of the above seeding mixes and rates are based on drill seeding followed by crimped straw mulch. These rates should be doubled if seed is broadcast and should be increased by 50 percent if the seeding is done using a Brillion Drill or is applied through hydraulic seeding. Hydraulic seeding may be substituted for drilling only where slopes are steeper than 3:1. If hydraulic seeding is used, hydraulic mulching should be done as a separate operation.

[b] See Table TS/PS-3 for seeding dates.

[c] If site is to be irrigated, the transition turf seed rates should be doubled.

[d] Crested wheatgrass should not be used on slopes steeper than 6H to 1V.

[e] Can substitute 0.5 lbs PLS of blue grama for the 2.0 lbs PLS of Vaughn sideoats grama.

Table TS/PS-3. Seeding Dates for Annual and Perennial Grasses

	Annual Grasses (Numbers in table reference species in Table TS/PS-1)		Perennial Grasses	
Seeding Dates	**Warm**	**Cool**	**Warm**	**Cool**
January 1–March 15			✓	✓
March 16–April 30	4	1,2,3	✓	✓
May 1–May 15	4		✓	
May 16–June 30	4,5,6,7			
July 1–July 15	5,6,7			
July 16–August 31				
September 1–September 30		8,9,10,11		
October 1–December 31			✓	✓

Mulch

Cover seeded areas with mulch or an appropriate rolled erosion control product to promote establishment of vegetation. Anchor mulch by crimping, netting or use of a non-toxic tackifier. See the Mulching BMP Fact Sheet for additional guidance.

Maintenance and Removal

Monitor and observe seeded areas to identify areas of poor growth or areas that fail to germinate. Reseed and mulch these areas, as needed.

An area that has been permanently seeded should have a good stand of vegetation within one growing season if irrigated and within three growing seasons without irrigation in Colorado. Reseed portions of the site that fail to germinate or remain bare after the first growing season.

Seeded areas may require irrigation, particularly during extended dry periods. Targeted weed control may also be necessary.

Protect seeded areas from construction equipment and vehicle access.

- Clean, weed-free and seed-free cereal grain straw should be applied evenly at a rate of 2 tons per acre and must be tacked or fastened by a method suitable for the condition of the site. Straw mulch must be anchored (and not merely placed) on the surface. This can be accomplished mechanically by crimping or with the aid of tackifiers or nets. Anchoring with a crimping implement is preferred, and is the recommended method for areas flatter than 3:1. Mechanical crimpers must be capable of tucking the long mulch fibers into the soil to a depth of 3 inches without cutting them. An agricultural disk, while not an ideal substitute, may work if the disk blades are dull or blunted and set vertically; however, the frame may have to be weighted to afford proper soil penetration.
- Grass hay may be used in place of straw; however, because hay is comprised of the entire plant including seed, mulching with hay may seed the site with non-native grass species which might in turn out-compete the native seed. Alternatively, native species of grass hay may be purchased, but can be difficult to find and are more expensive than straw. Purchasing and utilizing a certified weed-free straw is an easier and less costly mulching method. When using grass hay, follow the same guidelines as for straw (provided above).
- On small areas sheltered from the wind and heavy runoff, spraying a tackifier on the mulch is satisfactory for holding it in place. For steep slopes and special situations where greater control is needed, erosion control blankets anchored with stakes should be used instead of mulch.
- Hydraulic mulching consists of wood cellulose fibers mixed with water and a tackifying agent and should be applied at a rate of no less than 1,500 pounds per acre (1,425 lbs of fibers mixed with at least 75 lbs of tackifier) with a hydraulic mulcher. For steeper slopes, up to 2000 pounds per acre may be required for effective hydroseeding. Hydromulch typically requires up to 24 hours to dry; therefore, it should not be applied immediately prior to inclement weather. Application to roads, waterways and existing vegetation should be avoided.
- Erosion control mats, blankets, or nets are recommended to help stabilize steep slopes (generally 3:1 and steeper) and waterways. Depending on the product, these may be used alone or in conjunction with grass or straw mulch. Normally, use of these products will be restricted to relatively small areas. Biodegradable mats made of straw and jute, straw-coconut, coconut fiber, or excelsior can be used instead of mulch. (See the ECM/TRM BMP for more information.)
- Some tackifiers or binders may be used to anchor mulch. Check with the local jurisdiction for allowed tackifiers. Manufacturer's recommendations should be followed at all times. (See the Soil Binder BMP for more information on general types of tackifiers.)
- Rock can also be used as mulch. It provides protection of exposed soils to wind and water erosion and allows infiltration of precipitation. An aggregate base course can be spread on disturbed areas for temporary or permanent stabilization. The rock mulch layer should be thick enough to provide full coverage of exposed soil on the area it is applied.

Maintenance and Removal

After mulching, the bare ground surface should not be more than 10 percent exposed. Reapply mulch, as needed, to cover bare areas.

EPC 6/23/2020

FOR LOCATING & MARKING GAS, ELECTRIC, WATER & TELEPHONE LINES
FOR BURIED UTILITY INFORMATION
48 HRS BEFORE YOU DIG
CALL 1-800-922-1987

BRANDING IRON AT STERLING RANCH FILING NO. 2
GRADING & EROSION CONTROL DETAILS
DATE: 03/23/2020
SCALE: HORIZONTAL: N/A VERTICAL: N/A
SHEET 3 OF 7
GR03
PROJECT NO. 09-012
DESIGNED BY: DLM
DRAWN BY: JWP
CHECKED BY: VAS

102 E. PIKES PEAK AVE. 5TH FLOOR
COLORADO SPRINGS, CO 80903
PHONE: 719.955.5485
CIVIL CONSULTANTS, INC.

FOR AND ON BEHALF OF M&S CIVIL CONSULTANTS, INC.
VIRGIL A. SANCHEZ, COLORADO P.E. NO. 37160
COLORADO REGISTERED PROFESSIONAL ENGINEER 37160

REVISIONS: NO. DATE: BY: DESCRIPTION: APRV'D. BY: DATE:

THE ENGINEER PREPARING THESE PLANS WILL NOT BE RESPONSIBLE OR LIABLE FOR UNAUTHORIZED CHANGES TO OR USES OF THESE PLANS. ALL CHANGES TO THE PLANS MUST BE IN WRITING AND MUST BE APPROVED BY THE PREPARER OF THESE PLANS.

CAUTION

File: O:\09012A\Challenger East\dwg\Const Dwg\Grading & Erosion Control\GR03.dwg Plotstamp: 3/25/2020 3:00 PM

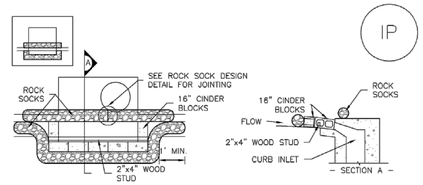

IP–1. BLOCK AND ROCK SOCK SUMP OR ON GRADE INLET PROTECTION

BLOCK AND CURB SOCK INLET PROTECTION INSTALLATION NOTES

1. SEE ROCK SOCK DESIGN DETAIL FOR INSTALLATION REQUIREMENTS.

2. CONCRETE "CINDER" BLOCKS SHALL BE LAID ON THEIR SIDES AROUND THE INLET IN A SINGLE ROW, ABUTTING ONE ANOTHER WITH THE OPEN END FACING AWAY FROM THE CURB.

3. GRAVEL BAGS SHALL BE PLACED AROUND CONCRETE BLOCKS, CLOSELY ABUTTING ONE ANOTHER AND JOINTED TOGETHER IN ACCORDANCE WITH ROCK SOCK DESIGN DETAIL.

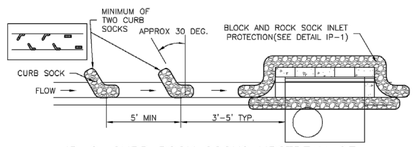

IP–2. CURB ROCK SOCKS UPSTREAM OF INLET PROTECTION

CURB ROCK SOCK INLET PROTECTION INSTALLATION NOTES

1. SEE ROCK SOCK DESIGN DETAIL INSTALLATION REQUIREMENTS.

2. PLACEMENT OF THE SOCK SHALL BE APPROXIMATELY 30 DEGREES FROM PERPENDICULAR IN THE OPPOSITE DIRECTION OF FLOW.

3. SOCKS ARE TO BE FLUSH WITH THE CURB AND SPACED A MINIMUM OF 5 FEET APART.

4. AT LEAST TWO CURB SOCKS IN SERIES ARE REQUIRED UPSTREAM OF ON–GRADE INLETS.

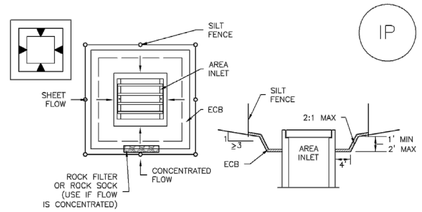

IP–5. OVEREXCAVATION INLET PROTECTION

OVEREXCAVATION INLET PROTECTION INSTALLATION NOTES

1. THIS FORM OF INLET PROTECTION IS PRIMARILY APPLICABLE FOR SITES THAT HAVE NOT YET REACHED FINAL GRADE AND SHOULD BE USED ONLY FOR INLETS WITH A RELATIVELY SMALL CONTRIBUTING DRAINAGE AREA.

2. WHEN USING FOR CONCENTRATED FLOWS, SHAPE BASIN IN 2:1 RATIO WITH LENGTH ORIENTED TOWARDS DIRECTION OF FLOW.

3. SEDIMENT MUST BE PERIODICALLY REMOVED FROM THE OVEREXCAVATED AREA.

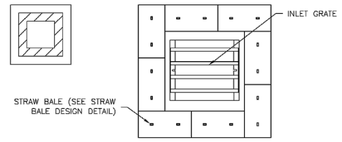

IP–6. STRAW BALE FOR SUMP INLET PROTECTION

STRAW BALE BARRIER INLET PROTECTION INSTALLATION NOTES

1. SEE STRAW BALE DESIGN DETAIL FOR INSTALLATION REQUIREMENTS.

2. BALES SHALL BE PLACED IN A SINGLE ROW AROUND THE INLET WITH ENDS OF BALES TIGHTLY ABUTTING ONE ANOTHER.

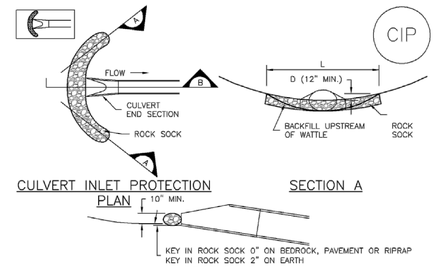

CIP–1. CULVERT INLET PROTECTION

CULVERT INLET PROTECTION INSTALLATION NOTES

1. SEE PLAN VIEW FOR
–LOCATION OF CULVERT INLET PROTECTION.

2. SEE ROCK SOCK DESIGN DETAIL FOR ROCK GRADATION REQUIREMENTS AND JOINTING DETAIL.

CULVERT INLET PROTECTION MAINTENANCE NOTES

1. INSPECT BMPs EACH WORKDAY, AND MAINTAIN THEM IN EFFECTIVE OPERATING CONDITION. MAINTENANCE OF BMPs SHOULD BE PROACTIVE, NOT REACTIVE. INSPECT BMPs AS SOON AS POSSIBLE (AND ALWAYS WITHIN 24 HOURS) FOLLOWING A STORM THAT CAUSES SURFACE EROSION, AND PERFORM NECESSARY MAINTENANCE.

2. FREQUENT OBSERVATIONS AND MAINTENANCE ARE NECESSARY TO MAINTAIN BMPs IN EFFECTIVE OPERATING CONDITION. INSPECTIONS AND CORRECTIVE MEASURES SHOULD BE DOCUMENTED THOROUGHLY.

3. WHERE BMPs HAVE FAILED, REPAIR OR REPLACEMENT SHOULD BE INITIATED UPON DISCOVERY OF THE FAILURE.

4. SEDIMENT ACCUMULATED UPSTREAM OF THE CULVERT SHALL BE REMOVED WHEN THE SEDIMENT DEPTH IS ½ THE HEIGHT OF THE ROCK SOCK.

5. CULVERT INLET PROTECTION SHALL REMAIN IN PLACE UNTIL THE UPSTREAM DISTURBED AREA IS PERMANENTLY STABILIZED AND APPROVED BY THE LOCAL JURISDICTION.

(DETAILS ADAPTED FROM AURORA, COLORADO, NOT AVAILABLE IN AUTOCAD)

NOTE: MANY JURISDICTIONS HAVE BMP DETAILS THAT VARY FROM UDFCD STANDARD DETAILS. CONSULT WITH LOCAL JURISDICTIONS AS TO WHICH DETAIL SHOULD BE USED WHEN DIFFERENCES ARE NOTED.

GENERAL INLET PROTECTION INSTALLATION NOTES

1. SEE PLAN VIEW FOR:
–LOCATION OF INLET PROTECTION.
–TYPE OF INLET PROTECTION (IP.1, IP.2, IP.3, IP.4, IP.5, IP.6)

2. INLET PROTECTION SHALL BE INSTALLED PROMPTLY AFTER INLET CONSTRUCTION OR PAVING IS COMPLETE (TYPICALLY WITHIN 48 HOURS). IF A RAINFALL/RUNOFF EVENT IS FORECAST, INSTALL INLET PROTECTION PRIOR TO ONSET OF EVENT.

3. MANY JURISDICTIONS HAVE BMP DETAILS THAT VARY FROM UDFCD STANDARD DETAILS. CONSULT WITH LOCAL JURISDICTIONS AS TO WHICH DETAIL SHOULD BE USED WHEN DIFFERENCES ARE NOTED.

INLET PROTECTION MAINTENANCE NOTES

1. INSPECT BMPs EACH WORKDAY, AND MAINTAIN THEM IN EFFECTIVE OPERATING CONDITION. MAINTENANCE OF BMPs SHOULD BE PROACTIVE, NOT REACTIVE. INSPECT BMPs AS SOON AS POSSIBLE (AND ALWAYS WITHIN 24 HOURS) FOLLOWING A STORM THAT CAUSES SURFACE EROSION, AND PERFORM NECESSARY MAINTENANCE.

2. FREQUENT OBSERVATIONS AND MAINTENANCE ARE NECESSARY TO MAINTAIN BMPs IN EFFECTIVE OPERATING CONDITION. INSPECTIONS AND CORRECTIVE MEASURES SHOULD BE DOCUMENTED THOROUGHLY.

3. WHERE BMPs HAVE FAILED, REPAIR OR REPLACEMENT SHOULD BE INITIATED UPON DISCOVERY OF THE FAILURE.

4. SEDIMENT ACCUMULATED UPSTREAM OF INLET PROTECTION SHALL BE REMOVED AS NECESSARY TO MAINTAIN BMP EFFECTIVENESS. TYPICALLY WHEN STORAGE VOLUME REACHES 50% OF CAPACITY, A DEPTH OF 6" WHEN SILT FENCE IS USED, OR ¼ OF THE HEIGHT FOR STRAW BALES.

5. INLET PROTECTION IS TO REMAIN IN PLACE UNTIL THE UPSTREAM DISTURBED AREA IS PERMANENTLY STABILIZED, UNLESS THE LOCAL JURISDICTION APPROVES EARLIER REMOVAL OF INLET PROTECTION IN STREETS.

6. WHEN INLET PROTECTION AT AREA INLETS IS REMOVED, THE DISTURBED AREA SHALL BE COVERED WITH TOP SOIL, SEEDED AND MULCHED, OR OTHERWISE STABILIZED IN A MANNER APPROVED BY THE LOCAL JURISDICTION.

(DETAIL ADAPTED FROM TOWN OF PARKER, COLORADO AND CITY OF AURORA, COLORADO, NOT AVAILABLE IN AUTOCAD)

NOTE: MANY JURISDICTIONS HAVE BMP DETAILS THAT VARY FROM UDFCD STANDARD DETAILS. CONSULT WITH LOCAL JURISDICTIONS AS TO WHICH DETAIL SHOULD BE USED WHEN DIFFERENCES ARE NOTED.

NOTE: THE DETAILS INCLUDED WITH THIS FACT SHEET SHOW COMMONLY USED, CONVENTIONAL METHODS OF INLET PROTECTION IN THE DENVER METROPOLITAN AREA. THERE ARE MANY PROPRIETARY INLET PROTECTION METHODS ON THE MARKET. UDFCD NEITHER ENDORSES NOR DISCOURAGES USE OF PROPRIETARY INLET PROTECTION; HOWEVER, IN THE EVENT PROPRIETARY METHODS ARE USED, THE APPROPRIATE DETAIL FROM THE MANUFACTURER MUST BE INCLUDED IN THE SWMP AND THE BMP MUST BE INSTALLED AND MAINTAINED AS SHOWN IN THE MANUFACTURER'S DETAILS.

NOTE: SOME MUNICIPALITIES DISCOURAGE OR PROHIBIT THE USE OF STRAW BALES FOR INLET PROTECTION. CHECK WITH LOCAL JURISDICTION TO DETERMINE IF STRAW BALE INLET PROTECTION IS ACCEPTABLE.

IP-3. Rock Sock Inlet Protection for Sump/Area Inlet

IP-4. Silt Fence Inlet Protection for Sump/Area Inlet

IP-5. Over-excavation Inlet Protection

IP-6. Straw Bale Inlet Protection for Sump/Area Inlet

CIP-1. Culvert Inlet Protection

Propriety inlet protection devices should be installed in accordance with manufacturer specifications.

More information is provided below on selecting inlet protection for sump and on-grade locations.

Inlets Located in a Sump

When applying inlet protection in sump conditions, it is important that the inlet continue to function during larger runoff events. For curb inlets, the maximum height of the protective barrier should be lower than the top of the curb opening to allow overflow into the inlet during larger storms without excessive localized flooding. If the inlet protection height is greater than the curb elevation, particularly if the filter becomes clogged with sediment, runoff will not enter the inlet and may bypass it, possibly causing localized flooding, public safety issues, and downstream erosion and damage from bypassed flows.

Area inlets located in a sump setting can be protected through the use of silt fence, concrete block and rock socks (on paved surfaces), sediment control logs/straw wattles embedded in the adjacent soil and stacked around the area inlet (on pervious surfaces), over-excavation around the inlet, and proprietary products providing equivalent functions.

Inlets Located on a Slope

For curb and gutter inlets on paved sloping streets, block and rock sock inlet protection is recommended in conjunction with curb socks in the gutter leading to the inlet. For inlets located along unpaved roads, also see the Check Dam Fact Sheet.

Maintenance and Removal

Inspect inlet protection frequently. Inspection and maintenance guidance includes:

- Inspect for tears that can result in sediment directly entering the inlet, as well as result in the contents of the BMP (e.g., gravel) washing into the inlet.
- Check for improper installation resulting in untreated flows bypassing the BMP and directly entering the inlet or bypassing to an unprotected downstream inlet. For example, silt fence that has not been properly trenched around the inlet can result in flows under the silt fence and directly into the inlet.
- Look for displaced BMPs that are no longer protecting the inlet. Displacement may occur following larger storm events that wash away or reposition the inlet protection. Traffic or equipment may also crush or displace the BMP.
- Monitor sediment accumulation upgradient of the inlet protection.

- Remove sediment accumulation from the area upstream of the inlet protection, as needed to maintain BMP effectiveness, typically when it reaches no more than half the storage capacity of the inlet protection. For silt fence, remove sediment when it accumulates to a depth of no more than 6 inches. Remove sediment accumulation from the area upstream of the inlet protection as needed to maintain the functionality of the BMP.
- Propriety inlet protection devices should be inspected and maintained in accordance with manufacturer specifications. If proprietary inlet insert devices are used, sediment should be removed in a timely manner to prevent devices from breaking and spilling sediment into the storm drain.

Inlet protection must be removed and properly disposed of when the drainage area for the inlet has reached final stabilization.

EPC 6/23/2020

BRANDING IRON AT STERLING RANCH FILING NO. 2
GRADING & EROSION CONTROL PLAN
DATE: 03/23/2020
SHEET 4 OF 7
GR04
PROJECT NO. 09-012
SCALE: HORIZONTAL: N/A VERTICAL: N/A
DESIGNED BY: DLM
DRAWN BY: JWP
CHECKED BY: VAS

102 E. PIKES PEAK AVE. 5TH FLOOR
COLORADO SPRINGS, CO 80903
PHONE: 719.955.5485
CIVIL CONSULTANTS, INC.

VIRGIL A. SANCHEZ, COLORADO P.E. NO. 37160

FOR AND ON BEHALF OF M&S CIVIL CONSULTANTS, INC.

REGISTERED PROFESSIONAL ENGINEER 37160 COLORADO

REVISIONS:

NO.	DATE:	BY:	DESCRIPTION:	APRV'D. BY:	DATE:

THE ENGINEER PREPARING THESE PLANS WILL NOT BE RESPONSIBLE OR LIABLE FOR UNAUTHORIZED CHANGES TO OR USES OF THESE PLANS. ALL CHANGES TO THE PLANS MUST BE IN WRITING AND MUST BE APPROVED BY THE PREPARER OF THESE PLANS.

CAUTION

File: O:\09012A\Challenger East\dwg\Const Dwg\Grading & Erosion Control\GR04.dwg Plotstamp: 3/25/2020 3:02 PM

SC-1 Silt Fence (SF)

SILT FENCE INSTALLATION NOTES

1. SILT FENCE MUST BE PLACED AWAY FROM THE TOE OF THE SLOPE TO ALLOW FOR WATER PONDING. SILT FENCE AT THE TOE OF A SLOPE SHOULD BE INSTALLED IN A FLAT LOCATION AT LEAST SEVERAL FEET (2–5 FT) FROM THE TOE OF THE SLOPE TO ALLOW ROOM FOR PONDING AND DEPOSITION.

2. A UNIFORM 6" X 4" ANCHOR TRENCH SHALL BE EXCAVATED USING TRENCHER OR SILT FENCE INSTALLATION DEVICE. NO ROAD GRADERS, BACKHOES, OR SIMILAR EQUIPMENT SHALL BE USED.

3. COMPACT ANCHOR TRENCH BY HAND WITH A "JUMPING JACK" OR BY WHEEL ROLLING. COMPACTION SHALL BE SUCH THAT SILT FENCE RESISTS BEING PULLED OUT OF ANCHOR TRENCH BY HAND.

4. SILT FENCE SHALL BE PULLED TIGHT AS IT IS ANCHORED TO THE STAKES. THERE SHOULD BE NO NOTICEABLE SAG BETWEEN STAKES AFTER IT HAS BEEN ANCHORED TO THE STAKES.

5. SILT FENCE FABRIC SHALL BE ANCHORED TO THE STAKES USING 1" HEAVY DUTY STAPLES OR NAILS WITH 1" HEADS. STAPLES AND NAILS SHOULD BE PLACED 3" ALONG THE FABRIC DOWN THE STAKE.

6. AT THE END OF A RUN OF SILT FENCE ALONG A CONTOUR, THE SILT FENCE SHOULD BE TURNED PERPENDICULAR TO THE CONTOUR TO CREATE A "J-HOOK." THE "J-HOOK" EXTENDING PERPENDICULAR TO THE CONTOUR SHOULD BE OF SUFFICIENT LENGTH TO KEEP RUNOFF FROM FLOWING AROUND THE END OF THE SILT FENCE (TYPICALLY 10' – 20').

7. SILT FENCE SHALL BE INSTALLED PRIOR TO ANY LAND DISTURBING ACTIVITIES.

SILT FENCE MAINTENANCE NOTES

1. INSPECT BMPs EACH WORKDAY, AND MAINTAIN THEM IN EFFECTIVE OPERATING CONDITION. MAINTENANCE OF BMPs SHOULD BE PROACTIVE, NOT REACTIVE. INSPECT BMPs AS SOON AS POSSIBLE (AND ALWAYS WITHIN 24 HOURS) FOLLOWING A STORM THAT CAUSES SURFACE EROSION, AND PERFORM NECESSARY MAINTENANCE.

2. FREQUENT OBSERVATIONS AND MAINTENANCE ARE NECESSARY TO MAINTAIN BMPs IN EFFECTIVE OPERATING CONDITION. INSPECTIONS AND CORRECTIVE MEASURES SHOULD BE DOCUMENTED THOROUGHLY.

3. WHERE BMPs HAVE FAILED, REPAIR OR REPLACEMENT SHOULD BE INITIATED UPON DISCOVERY OF THE FAILURE.

4. SEDIMENT ACCUMULATED UPSTREAM OF THE SILT FENCE SHALL BE REMOVED AS NEEDED TO MAINTAIN THE FUNCTIONALITY OF THE BMP, TYPICALLY WHEN DEPTH OF ACCUMULATED SEDIMENTS IS APPROXIMATELY 6".

5. REPAIR OR REPLACE SILT FENCE WHEN THERE ARE SIGNS OF WEAR, SUCH AS SAGGING, TEARING, OR COLLAPSE.

6. SILT FENCE IS TO REMAIN IN PLACE UNTIL THE UPSTREAM DISTURBED AREA IS STABILIZED AND APPROVED BY THE LOCAL JURISDICTION, OR IS REPLACED BY AN EQUIVALENT PERIMETER SEDIMENT CONTROL BMP.

7. WHEN SILT FENCE IS REMOVED, ALL DISTURBED AREAS SHALL BE COVERED WITH TOPSOIL, SEEDED AND MULCHED OR OTHERWISE STABILIZED AS APPROVED BY LOCAL JURISDICTION.

(DETAIL ADAPTED FROM TOWN OF PARKER, COLORADO AND CITY OF AURORA, NOT AVAILABLE IN AUTOCAD)

NOTE: MANY JURISDICTIONS HAVE BMP DETAILS THAT VARY FROM UDFCD STANDARD DETAILS. CONSULT WITH LOCAL JURISDICTIONS AS TO WHICH DETAIL SHOULD BE USED WHEN DIFFERENCES ARE NOTED.

SC-3 Straw Bale Barrier (SBB)

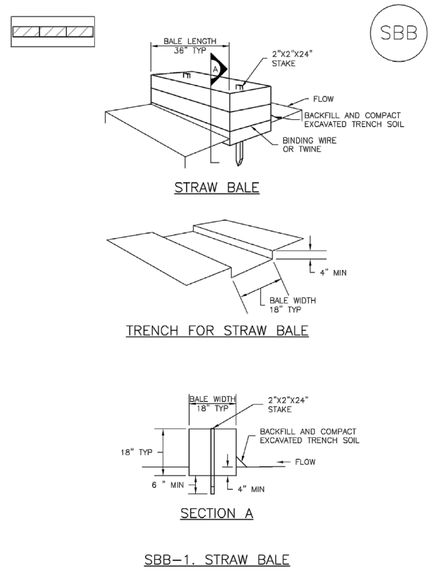

SBB–1. STRAW BALE

Straw Bale Barrier (SBB) SC-3

STRAW BALE INSTALLATION NOTES

1. SEE PLAN VIEW FOR:
   –LOCATION(S) OF STRAW BALES.

2. STRAW BALES SHALL CONSIST OF CERTIFIED WEED FREE STRAW OR HAY. LOCAL JURISDICTIONS MAY REQUIRE PROOF THAT BALES ARE WEED FREE.

3. STRAW BALES SHALL CONSIST OF APPROXIMATELY 5 CUBIC FEET OF STRAW OR HAY AND WEIGH NOT LESS THAN 35 POUNDS.

4. WHEN STRAW BALES ARE USED IN SERIES AS A BARRIER, THE END OF EACH BALE SHALL BE TIGHTLY ABUTTING ONE ANOTHER.

5. STRAW BALE DIMENSIONS SHALL BE APPROXIMATELY 36"X18"X18".

6. A UNIFORM ANCHOR TRENCH SHALL BE EXCAVATED TO A DEPTH OF 4". STRAW BALES SHALL BE PLACED SO THAT BINDING TWINE IS ENCOMPASSING THE VERTICAL SIDES OF THE BALE(S). ALL EXCAVATED SOIL SHALL BE PLACED ON THE UPHILL SIDE OF THE STRAW BALE(S) AND COMPACTED.

7. TWO (2) WOODEN STAKES SHALL BE USED TO HOLD EACH BALE IN PLACE. WOODEN STAKES SHALL BE 2"X2"X24". WOODEN STAKES SHALL BE DRIVEN 6" INTO THE GROUND.

STRAW BALE MAINTENANCE NOTES

1. INSPECT BMPs EACH WORKDAY, AND MAINTAIN THEM IN EFFECTIVE OPERATING CONDITION. MAINTENANCE OF BMPs SHOULD BE PROACTIVE, NOT REACTIVE. INSPECT BMPs AS SOON AS POSSIBLE (AND ALWAYS WITHIN 24 HOURS) FOLLOWING A STORM THAT CAUSES SURFACE EROSION, AND PERFORM NECESSARY MAINTENANCE.

2. FREQUENT OBSERVATIONS AND MAINTENANCE ARE NECESSARY TO MAINTAIN BMPs IN EFFECTIVE OPERATING CONDITION. INSPECTIONS AND CORRECTIVE MEASURES SHOULD BE DOCUMENTED THOROUGHLY.

3. WHERE BMPs HAVE FAILED, REPAIR OR REPLACEMENT SHOULD BE INITIATED UPON DISCOVERY OF THE FAILURE.

4. STRAW BALES SHALL BE REPLACED IF THEY BECOME HEAVILY SOILED, ROTTEN, OR DAMAGED BEYOND REPAIR.

5. SEDIMENT ACCUMULATED UPSTREAM OF STRAW BALE BARRIER SHALL BE REMOVED AS NEEDED TO MAINTAIN FUNCTIONALITY OF THE BMP, TYPICALLY WHEN DEPTH OF ACCUMULATED SEDIMENTS IS APPROXIMATELY ¼ OF THE HEIGHT OF THE STRAW BALE BARRIER.

6. STRAW BALES ARE TO REMAIN IN PLACE UNTIL THE UPSTREAM DISTURBED AREA IS STABILIZED AND APPROVED BY THE LOCAL JURISDICTION.

7. WHEN STRAW BALES ARE REMOVED, ALL DISTURBED AREAS SHALL BE COVERED WITH TOPSOIL, SEEDED AND MULCHED OR OTHERWISE STABILIZED AS APPROVED BY LOCAL JURISDICTION.

(DETAILS ADAPTED FROM TOWN OF PARKER, COLORADO, NOT AVAILABLE IN AUTOCAD)

NOTE: MANY JURISDICTIONS HAVE BMP DETAILS THAT VARY FROM UDFCD STANDARD DETAILS. CONSULT WITH LOCAL JURISDICTIONS AS TO WHICH DETAIL SHOULD BE USED WHEN DIFFERENCES ARE NOTED.

Vehicle Tracking Control (VTC) SM-4

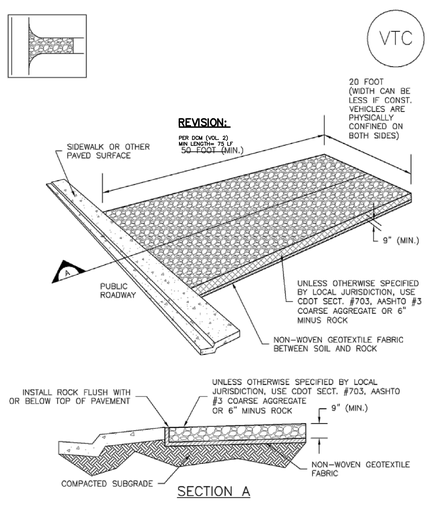

VTC–1. AGGREGATE VEHICLE TRACKING CONTROL

Silt Fence (SF) SC-1

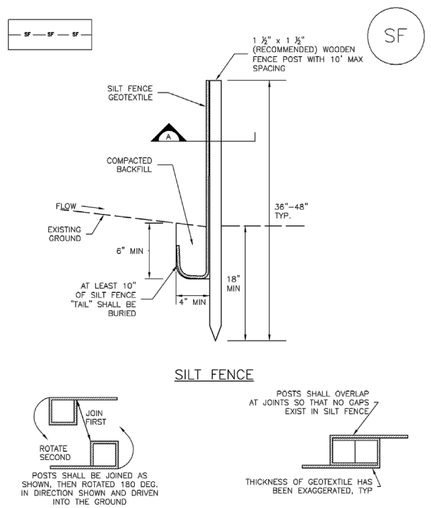

SF–1. SILT FENCE

SC-1 Silt Fence (SF)

SILT FENCE INSTALLATION NOTES

1. SILT FENCE MUST BE PLACED AWAY FROM THE TOE OF THE SLOPE TO ALLOW FOR WATER PONDING. SILT FENCE AT THE TOE OF A SLOPE SHOULD BE INSTALLED IN A FLAT LOCATION AT LEAST SEVERAL FEET (2–5 FT) FROM THE TOE OF THE SLOPE TO ALLOW ROOM FOR PONDING AND DEPOSITION.

2. A UNIFORM 6" X 4" ANCHOR TRENCH SHALL BE EXCAVATED USING TRENCHER OR SILT FENCE INSTALLATION DEVICE. NO ROAD GRADERS, BACKHOES, OR SIMILAR EQUIPMENT SHALL BE USED.

3. COMPACT ANCHOR TRENCH BY HAND WITH A "JUMPING JACK" OR BY WHEEL ROLLING. COMPACTION SHALL BE SUCH THAT SILT FENCE RESISTS BEING PULLED OUT OF ANCHOR TRENCH BY HAND.

4. SILT FENCE SHALL BE PULLED TIGHT AS IT IS ANCHORED TO THE STAKES. THERE SHOULD BE NO NOTICEABLE SAG BETWEEN STAKES AFTER IT HAS BEEN ANCHORED TO THE STAKES.

5. SILT FENCE FABRIC SHALL BE ANCHORED TO THE STAKES USING 1" HEAVY DUTY STAPLES OR NAILS WITH 1" HEADS. STAPLES AND NAILS SHOULD BE PLACED 3" ALONG THE FABRIC DOWN THE STAKE.

6. AT THE END OF A RUN OF SILT FENCE ALONG A CONTOUR, THE SILT FENCE SHOULD BE TURNED PERPENDICULAR TO THE CONTOUR TO CREATE A "J-HOOK." THE "J-HOOK" EXTENDING PERPENDICULAR TO THE CONTOUR SHOULD BE OF SUFFICIENT LENGTH TO KEEP RUNOFF FROM FLOWING AROUND THE END OF THE SILT FENCE (TYPICALLY 10' – 20').

7. SILT FENCE SHALL BE INSTALLED PRIOR TO ANY LAND DISTURBING ACTIVITIES.

SILT FENCE MAINTENANCE NOTES

1. INSPECT BMPs EACH WORKDAY, AND MAINTAIN THEM IN EFFECTIVE OPERATING CONDITION. MAINTENANCE OF BMPs SHOULD BE PROACTIVE, NOT REACTIVE. INSPECT BMPs AS SOON AS POSSIBLE (AND ALWAYS WITHIN 24 HOURS) FOLLOWING A STORM THAT CAUSES SURFACE EROSION, AND PERFORM NECESSARY MAINTENANCE.

2. FREQUENT OBSERVATIONS AND MAINTENANCE ARE NECESSARY TO MAINTAIN BMPs IN EFFECTIVE OPERATING CONDITION. INSPECTIONS AND CORRECTIVE MEASURES SHOULD BE DOCUMENTED THOROUGHLY.

3. WHERE BMPs HAVE FAILED, REPAIR OR REPLACEMENT SHOULD BE INITIATED UPON DISCOVERY OF THE FAILURE.

4. SEDIMENT ACCUMULATED UPSTREAM OF THE SILT FENCE SHALL BE REMOVED AS NEEDED TO MAINTAIN THE FUNCTIONALITY OF THE BMP, TYPICALLY WHEN DEPTH OF ACCUMULATED SEDIMENTS IS APPROXIMATELY 6".

5. REPAIR OR REPLACE SILT FENCE WHEN THERE ARE SIGNS OF WEAR, SUCH AS SAGGING, TEARING, OR COLLAPSE.

6. SILT FENCE IS TO REMAIN IN PLACE UNTIL THE UPSTREAM DISTURBED AREA IS STABILIZED AND APPROVED BY THE LOCAL JURISDICTION, OR IS REPLACED BY AN EQUIVALENT PERIMETER SEDIMENT CONTROL BMP.

7. WHEN SILT FENCE IS REMOVED, ALL DISTURBED AREAS SHALL BE COVERED WITH TOPSOIL, SEEDED AND MULCHED OR OTHERWISE STABILIZED AS APPROVED BY LOCAL JURISDICTION.

(DETAIL ADAPTED FROM TOWN OF PARKER, COLORADO AND CITY OF AURORA, NOT AVAILABLE IN AUTOCAD)

NOTE: MANY JURISDICTIONS HAVE BMP DETAILS THAT VARY FROM UDFCD STANDARD DETAILS. CONSULT WITH LOCAL JURISDICTIONS AS TO WHICH DETAIL SHOULD BE USED WHEN DIFFERENCES ARE NOTED.

SF-4 Urban Drainage and Flood Control District November 2010
Urban Storm Drainage Criteria Manual Volume 3

FOR LOCATING & MARKING GAS, ELECTRIC, WATER & TELEPHONE LINES
FOR BURIED UTILITY INFORMATION
48 HRS BEFORE YOU DIG
CALL 1–800–922–1987

EPC 6/23/2020

BRANDING IRON AT STERLING RANCH FILING NO. 2
GRADING & EROSION CONTROL DETAILS
DATE: 03/23/2020
SHEET 5 OF 7
GR05
PROJECT NO. 09–012
SCALE: HORIZONTAL: N/A VERTICAL: N/A
DESIGNED BY: DLM
DRAWN BY: JWP
CHECKED BY: VAS

102 E. PIKES PEAK AVE. 5TH FLOOR
COLORADO SPRINGS, CO 80903
PHONE: 719.955.5485
CIVIL CONSULTANTS, INC.

FOR AND ON BEHALF OF M&S CIVIL CONSULTANTS, INC.
VIRGIL A. SANCHEZ, COLORADO P.E. NO. 37160

REVISIONS:

NO.	DATE:	BY:	DESCRIPTION:	APRV'D. BY:	DATE:

THE ENGINEER PREPARING THESE PLANS WILL NOT BE RESPONSIBLE OR LIABLE FOR UNAUTHORIZED CHANGES TO OR USES OF THESE PLANS. ALL CHANGES TO THE PLANS MUST BE IN WRITING AND MUST BE APPROVED BY THE PREPARER OF THESE PLANS.

CAUTION

File: O:\09012A\Challenger East\dwg\Const Dwg\Grading & Erosion Control\GR05.dwg Plotstamp: 3/25/2020 3:03 PM

SM-4 Vehicle Tracking Control (VTC)

STABILIZED CONSTRUCTION ENTRANCE/EXIT INSTALLATION NOTES

1. SEE PLAN VIEW FOR
   -LOCATION OF CONSTRUCTION ENTRANCE(S)/EXIT(S).
   -TYPE OF CONSTRUCTION ENTRANCE(S)/EXITS(S) (WITH/WITHOUT WHEEL WASH, CONSTRUCTION MAT OR TRM).

2. CONSTRUCTION MAT OR TRM STABILIZED CONSTRUCTION ENTRANCES ARE ONLY TO BE USED ON SHORT DURATION PROJECTS (TYPICALLY RANGING FROM A WEEK TO A MONTH) WHERE THERE WILL BE LIMITED VEHICULAR ACCESS.

3. A STABILIZED CONSTRUCTION ENTRANCE/EXIT SHALL BE LOCATED AT ALL ACCESS POINTS WHERE VEHICLES ACCESS THE CONSTRUCTION SITE FROM PAVED RIGHT-OF-WAYS.

4. STABILIZED CONSTRUCTION ENTRANCE/EXIT SHALL BE INSTALLED PRIOR TO ANY LAND DISTURBING ACTIVITIES.

5. A NON-WOVEN GEOTEXTILE FABRIC SHALL BE PLACED UNDER THE STABILIZED CONSTRUCTION ENTRANCE/EXIT PRIOR TO THE PLACEMENT OF ROCK.

6. UNLESS OTHERWISE SPECIFIED BY LOCAL JURISDICTION, ROCK SHALL CONSIST OF DOT SECT. #703, AASHTO #3 COARSE AGGREGATE OR 6" (MINUS) ROCK.

STABILIZED CONSTRUCTION ENTRANCE/EXIT MAINTENANCE NOTES

1. INSPECT BMPs EACH WORKDAY, AND MAINTAIN THEM IN EFFECTIVE OPERATING CONDITION. MAINTENANCE OF BMPs SHOULD BE PROACTIVE, NOT REACTIVE. INSPECT BMPs AS SOON AS POSSIBLE (AND ALWAYS WITHIN 24 HOURS) FOLLOWING A STORM THAT CAUSES SURFACE EROSION, AND PERFORM NECESSARY MAINTENANCE.

2. FREQUENT OBSERVATIONS AND MAINTENANCE ARE NECESSARY TO MAINTAIN BMPs IN EFFECTIVE OPERATING CONDITION. INSPECTIONS AND CORRECTIVE MEASURES SHOULD BE DOCUMENTED THOROUGHLY.

3. WHERE BMPs HAVE FAILED, REPAIR OR REPLACEMENT SHOULD BE INITIATED UPON DISCOVERY OF THE FAILURE.

4. ROCK SHALL BE REAPPLIED OR REGRADED AS NECESSARY TO THE STABILIZED ENTRANCE/EXIT TO MAINTAIN A CONSISTENT DEPTH.

5. SEDIMENT TRACKED ONTO PAVED ROADS IS TO BE REMOVED THROUGHOUT THE DAY AND AT THE END OF THE DAY BY SHOVELING OR SWEEPING. SEDIMENT MAY NOT BE WASHED DOWN STORM SEWER DRAINS.

NOTE: MANY JURISDICTIONS HAVE BMP DETAILS THAT VARY FROM UDFCD STANDARD DETAILS. CONSULT WITH LOCAL JURISDICTIONS AS TO WHICH DETAIL SHOULD BE USED WHEN DIFFERENCES ARE NOTED.

(DETAILS ADAPTED FROM CITY OF BROOMFIELD, COLORADO, NOT AVAILABLE IN AUTOCAD)

Stabilized Staging Area (SSA) SM-6

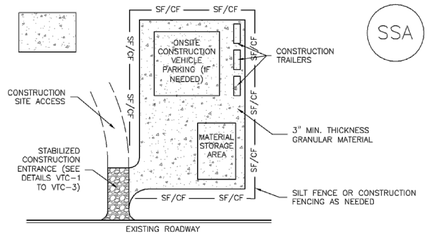

SSA-1. STABILIZED STAGING AREA

STABILIZED STAGING AREA INSTALLATION NOTES

1. SEE PLAN VIEW FOR
   -LOCATION OF STAGING AREA(S).
   -CONTRACTOR MAY ADJUST LOCATION AND SIZE OF STAGING AREA WITH APPROVAL FROM THE LOCAL JURISDICTION.

2. STABILIZED STAGING AREA SHOULD BE APPROPRIATE FOR THE NEEDS OF THE SITE. OVERSIZING RESULTS IN A LARGER AREA TO STABILIZE FOLLOWING CONSTRUCTION.

3. STAGING AREA SHALL BE STABILIZED PRIOR TO OTHER OPERATIONS ON THE SITE.

4. THE STABILIZED STAGING AREA SHALL CONSIST OF A MINIMUM 3" THICK GRANULAR MATERIAL.

5. UNLESS OTHERWISE SPECIFIED BY LOCAL JURISDICTION, ROCK SHALL CONSIST OF DOT SECT. #703, AASHTO #3 COARSE AGGREGATE OR 6" (MINUS) ROCK.

6. ADDITIONAL PERIMETER BMPs MAY BE REQUIRED INCLUDING BUT NOT LIMITED TO SILT FENCE AND CONSTRUCTION FENCING.

STABILIZED STAGING AREA MAINTENANCE NOTES

1. INSPECT BMPs EACH WORKDAY, AND MAINTAIN THEM IN EFFECTIVE OPERATING CONDITION. MAINTENANCE OF BMPs SHOULD BE PROACTIVE, NOT REACTIVE. INSPECT BMPs AS SOON AS POSSIBLE (AND ALWAYS WITHIN 24 HOURS) FOLLOWING A STORM THAT CAUSES SURFACE EROSION, AND PERFORM NECESSARY MAINTENANCE.

2. FREQUENT OBSERVATIONS AND MAINTENANCE ARE NECESSARY TO MAINTAIN BMPs IN EFFECTIVE OPERATING CONDITION. INSPECTIONS AND CORRECTIVE MEASURES SHOULD BE DOCUMENTED THOROUGHLY.

3. WHERE BMPs HAVE FAILED, REPAIR OR REPLACEMENT SHOULD BE INITIATED UPON DISCOVERY OF THE FAILURE.

4. ROCK SHALL BE REAPPLIED OR REGRADED AS NECESSARY IF RUTTING OCCURS OR UNDERLYING SUBGRADE BECOMES EXPOSED.

SM-6 Stabilized Staging Area (SSA)

Minimizing Long-Term Stabilization Requirements

- Utilize off-site parking and restrict vehicle access to the site.
- Use construction mats in lieu of rock when staging is provided in an area that will not be disturbed otherwise.
- Consider use of a bermed contained area for materials and equipment that do not require a stabilized surface.
- Consider phasing of staging areas to avoid disturbance in an area that will not be otherwise disturbed.

See Detail SSA-1 for a typical stabilized staging area and SSA-2 for a stabilized staging area when materials staging in roadways is required.

Maintenance and Removal

Maintenance of stabilized staging areas includes maintaining a stable surface cover of gravel, repairing perimeter controls, and following good housekeeping practices.

When construction is complete, debris, unused stockpiles and materials should be recycled or properly disposed. In some cases, this will require disposal of contaminated soil from equipment leaks in an appropriate landfill. Staging areas should then be permanently stabilized with vegetation or other surface cover planned for the development.

SM-6 Stabilized Staging Area (SSA)

STABILIZED STAGING AREA MAINTENANCE NOTES

5. STABILIZED STAGING AREA SHALL BE ENLARGED IF NECESSARY TO CONTAIN PARKING, STORAGE, AND UNLOADING/LOADING OPERATIONS.

6. THE STABILIZED STAGING AREA SHALL BE REMOVED AT THE END OF CONSTRUCTION. THE GRANULAR MATERIAL SHALL BE REMOVED OR, IF APPROVED BY THE LOCAL JURISDICTION, USED ON SITE, AND THE AREA COVERED WITH TOPSOIL, SEEDED AND MULCHED OR OTHERWISE STABILIZED IN A MANNER APPROVED BY LOCAL JURISDICTION.

NOTE: MANY MUNICIPALITIES PROHIBIT THE USE OF RECYCLED CONCRETE AS GRANULAR MATERIAL FOR STABILIZED STAGING AREAS DUE TO DIFFICULTIES WITH RE-ESTABLISHMENT OF VEGETATION IN AREAS WHERE RECYCLED CONCRETE WAS PLACED.

NOTE: MANY JURISDICTIONS HAVE BMP DETAILS THAT VARY FROM UDFCD STANDARD DETAILS. CONSULT WITH LOCAL JURISDICTIONS AS TO WHICH DETAIL SHOULD BE USED WHEN DIFFERENCES ARE NOTED.

(DETAILS ADAPTED FROM DOUGLAS COUNTY, COLORADO, NOT AVAILABLE IN AUTOCAD)

Rolled Erosion Control Products (RECP) EC-6

Staking patterns are also provided in the design details according to these factors:

- ECB type
- Slope or channel type

For other types of RECPs including TRMs, these design details are intended to serve as general guidelines for design and installation; however, engineers should adhere to manufacturer's installation recommendations.

Maintenance and Removal

Inspection of erosion control blankets and other RECPs includes:

- Check for general signs of erosion, including voids beneath the mat. If voids are apparent, fill the void with suitable soil and replace the erosion control blanket, following the appropriate staking pattern.
- Check for damaged or loose stakes and secure loose portions of the blanket.

Erosion control blankets and other RECPs that are biodegradable typically do not need to be removed after construction. If they must be removed, then an alternate soil stabilization method should be installed promptly following removal.

Turf reinforcement mats, although generally resistant to biodegradation, are typically left in place as a dense vegetated cover grows in through the mat matrix. The turf reinforcement mat provides long-term stability and helps the established vegetation resist erosive forces.

Rolled Erosion Control Products (RECP) EC-6

EROSION CONTROL BLANKET MAINTENANCE NOTES

1. INSPECT BMPs EACH WORKDAY, AND MAINTAIN THEM IN EFFECTIVE OPERATING CONDITION. MAINTENANCE OF BMPs SHOULD BE PROACTIVE, NOT REACTIVE. INSPECT BMPs AS SOON AS POSSIBLE (AND ALWAYS WITHIN 24 HOURS) FOLLOWING A STORM THAT CAUSES SURFACE EROSION, AND PERFORM NECESSARY MAINTENANCE.

2. FREQUENT OBSERVATIONS AND MAINTENANCE ARE NECESSARY TO MAINTAIN BMPs IN EFFECTIVE OPERATING CONDITION. INSPECTIONS AND CORRECTIVE MEASURES SHOULD BE DOCUMENTED THOROUGHLY.

3. WHERE BMPs HAVE FAILED, REPAIR OR REPLACEMENT SHOULD BE INITIATED UPON DISCOVERY OF THE FAILURE.

4. ECBs SHALL BE LEFT IN PLACE TO EVENTUALLY BIODEGRADE, UNLESS REQUESTED TO BE REMOVED BY THE LOCAL JURISDICTION.

5. ANY ECB PULLED OUT, TORN, OR OTHERWISE DAMAGED SHALL BE REPAIRED OR REINSTALLED. ANY SUBGRADE AREAS BELOW THE GEOTEXTILE THAT HAVE ERODED TO CREATED A VOID UNDER THE BLANKET, OR THAT REMAIN DEVOID OF GRASS SHALL BE REPAIRED, RESEEDED AND MULCHED AND THE ECB REINSTALLED.

NOTE: MANY JURISDICTIONS HAVE BMP DETAILS THAT VARY FROM UDFCD STANDARD DETAILS. CONSULT WITH LOCAL JURISDICTIONS AS TO WHICH DETAIL SHOULD BE USED WHEN DIFFERENCES ARE NOTED.

(DETAILS ADAPTED FROM DOUGLAS COUNTY, COLORADO AND TOWN OF PARKER COLORADO, NOT AVAILABLE IN AUTOCAD)

EPC 6/23/2020

FOR LOCATING & MARKING GAS, ELECTRIC, WATER & TELEPHONE LINES
FOR BURIED UTILITY INFORMATION
48 HRS BEFORE YOU DIG
CALL 1-800-922-1987

BRANDING IRON AT STERLING RANCH FILING NO. 2
GRADING & EROSION CONTROL DETAILS
DATE: 03/23/2020
SCALE: HORIZONTAL: N/A VERTICAL: N/A
SHEET 6 OF 7
GR06
PROJECT NO. 09-012
DESIGNED BY: DLM
DRAWN BY: JWP
CHECKED BY: VAS

102 E. PIKES PEAK AVE. 5TH FLOOR
COLORADO SPRINGS, CO 80903
PHONE: 719.955.5485
CIVIL CONSULTANTS, INC.

FOR AND ON BEHALF OF M&S CIVIL CONSULTANTS, INC.
VIRGIL A. SANCHEZ, COLORADO P.E. NO. 37160
COLORADO REGISTERED PROFESSIONAL ENGINEER 37160

REVISIONS:

NO.	DATE:	BY:	DESCRIPTION:	APRV'D. BY:	DATE:

THE ENGINEER PREPARING THESE PLANS WILL NOT BE RESPONSIBLE OR LIABLE FOR UNAUTHORIZED CHANGES TO OR USES OF THESE PLANS. ALL CHANGES TO THE PLANS MUST BE IN WRITING AND MUST BE APPROVED BY THE PREPARER OF THESE PLANS.

CAUTION

File: O:\09012A\Challenger East\dwg\Const Dwg\Grading & Erosion Control\GR06.dwg Plotstamp: 3/25/2020 3:04 PM

- **Turf Reinforcement Mat (TRM)**: A rolled erosion control product composed of non-degradable synthetic fibers, filaments, nets, wire mesh, and/or other elements, processed into a permanent, three-dimensional matrix of sufficient thickness. TRMs, which may be supplemented with degradable components, are designed to impart immediate erosion protection, enhance vegetation establishment and provide long-term functionality by permanently reinforcing vegetation during and after maturation. Note: TRMs are typically used in hydraulic applications, such as high flow ditches and channels, steep slopes, stream banks, and shorelines, where erosive forces may exceed the limits of natural, unreinforced vegetation or in areas where limited vegetation establishment is anticipated.

Tables RECP-1 and RECP-2 provide guidelines for selecting rolled erosion control products appropriate to site conditions and desired longevity. Table RECP-1 is for conditions where natural vegetation alone will provide permanent erosion control, whereas Table RECP-2 is for conditions where vegetation alone will not be adequately stable to provide long-term erosion protection due to flow or other conditions.

Table RECP-1. ECTC Standard Specification for Temporary Rolled Erosion Control Products
(Adapted from Erosion Control Technology Council 2005)

Product Description	Slope Applications*		Channel Applications*	Minimum Tensile Strength[1]	Expected Longevity
	Maximum Gradient	C Factor[2,5]	Max. Shear Stress[3,4,6]		
Mulch Control Nets	5:1 (H:V)	≤0.10 @ 5:1	0.25 lbs/ft^2 (12 Pa)	5 lbs/ft (0.073 kN/m)	Up to 12 months
Netless Rolled Erosion Control Blankets	4:1 (H:V)	≤0.10 @ 4:1	0.5 lbs/ft^2 (24 Pa)	5 lbs/ft (0.073 kN/m)	
Single-net Erosion Control Blankets & Open Weave Textiles	3:1 (H:V)	≤0.15 @ 3:1	1.5 lbs/ft^2 (72 Pa)	50 lbs/ft (0.73 kN/m)	
Double-net Erosion Control Blankets	2:1 (H:V)	≤0.20 @ 2:1	1.75 lbs/ft^2 (84 Pa)	75 lbs/ft (1.09 kN/m)	
Mulch Control Nets	5:1 (H:V)	≤0.10 @ 5:1	0.25 lbs/ft^2 (12 Pa)	25 lbs/ft (0.36 kN/m)	24 months
Erosion Control Blankets & Open Weave Textiles (slowly degrading)	1.5:1 (H:V)	≤0.25 @ 1.5:1	2.00 lbs/ft^2 (96 Pa)	100 lbs/ft (1.45 kN/m)	24 months
Erosion Control Blankets & Open Weave Textiles	1:1 (H:V)	≤0.25 @ 1:1	2.25 lbs/ft^2 (108 Pa)	125 lbs/ft (1.82 kN/m)	36 months

* C Factor and shear stress for mulch control nettings must be obtained with netting used in conjunction with pre-applied mulch material. (*See Section 5.3 of Chapter 7 Construction BMPs for more information on the C Factor.*)

[1] Minimum Average Roll Values, Machine direction using ECTC Mod. ASTM D 5035.

[2] C Factor calculated as ratio of soil loss from RECP protected slope (tested at specified or greater gradient, H:V) to ratio of soil loss from unprotected (control) plot in large-scale testing.

[3] Required minimum shear stress RECP (unvegetated) can sustain without physical damage or excess erosion (> 12.7 mm (0.5 in) soil loss) during a 30-minute flow event in large-scale testing.

[4] The permissible shear stress levels established for each performance category are based on historical experience with products characterized by Manning's roughness coefficients in the range of 0.01 - 0.05.

[5] Acceptable large-scale test methods may include ASTM D 6459, or other independent testing deemed acceptable by the engineer.

[6] Per the engineer's discretion. Recommended acceptable large-scale testing protocol may include ASTM D 6460, or other independent testing deemed acceptable by the engineer.

Table RECP-2. ECTC Standard Specification for Permanent[1] Rolled Erosion Control Products
(Adapted from: Erosion Control Technology Council 2005)

Product Type	Slope Applications	Channel Applications	
	Maximum Gradient	Maximum Shear Stress[4,5]	Minimum Tensile Strength[2,3]
TRMs with a minimum thickness of 0.25 inches (6.35 mm) per ASTM D 6525 and UV stability of 80% per ASTM D 4355 (500 hours exposure).	0.5:1 (H:V)	6.0 lbs/ft^2 (288 Pa)	125 lbs/ft (1.82 kN/m)
	0.5:1 (H:V)	8.0 lbs/ft^2 (384 Pa)	150 lbs/ft (2.19 kN/m)
	0.5:1 (H:V)	10.0 lbs/ft^2 (480 Pa)	175 lbs/ft (2.55 kN/m)

[1] For TRMs containing degradable components, all property values must be obtained on the non-degradable portion of the matting alone.

[2] Minimum Average Roll Values, machine direction only for tensile strength determination using ASTM D 6818 (Supersedes Mod. ASTM D 5035 for RECPs)

[3] Field conditions with high loading and/or high survivability requirements may warrant the use of a TRM with a tensile strength of 44 kN/m (3,000 lb/ft) or greater.

[4] Required minimum shear stress TRM (fully vegetated) can sustain without physical damage or excess erosion (> 12.7 mm (0.5 in.) soil loss) during a 30-minute flow event in large scale testing.

[5] Acceptable large-scale testing protocols may include ASTM D 6460, or other independent testing deemed acceptable by the engineer.

Design and Installation

RECPs should be installed according to manufacturer's specifications and guidelines. Regardless of the type of product used, it is important to ensure no gaps or voids exist under the material and that all corners of the material are secured using stakes and trenching. Continuous contact between the product and the soil is necessary to avoid failure. Never use metal stakes to secure temporary erosion control products. Often wooden stakes are used to anchor RECPs; however, wood stakes may present installation and maintenance challenges and generally take a long time to biodegrade. Some local jurisdictions have had favorable experiences using biodegradable stakes.

This BMP Fact Sheet provides design details for several commonly used ECB applications, including:

ECB-1 Pipe Outlet to Drainageway

ECB-2 Small Ditch or Drainageway

ECB-3 Outside of Drainageway

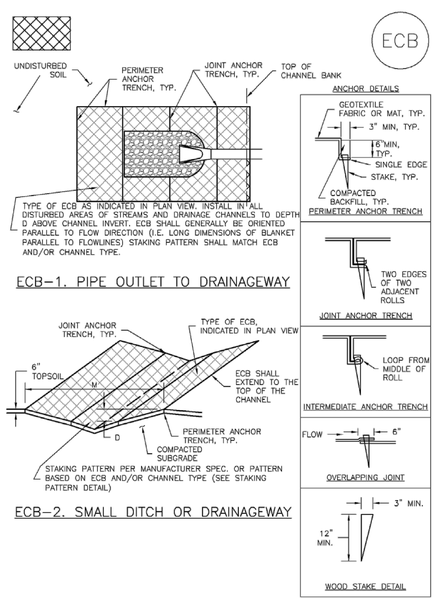

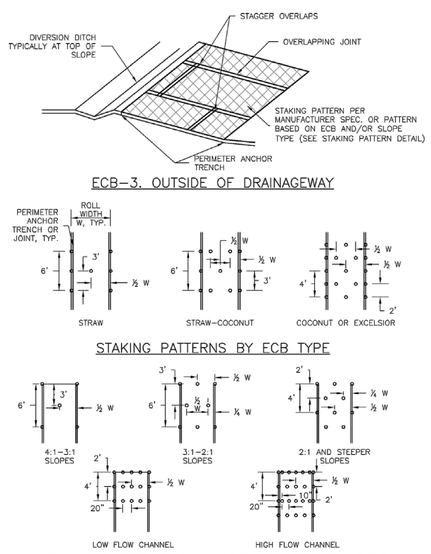

EROSION CONTROL BLANKET INSTALLATION NOTES

1. SEE PLAN VIEW FOR:
   –LOCATION OF ECB.
   –TYPE OF ECB (STRAW, STRAW–COCONUT, COCONUT, OR EXCELSIOR).
   –AREA, A, IN SQUARE YARDS OF EACH TYPE OF ECB.

2. 100% NATURAL AND BIODEGRADABLE MATERIALS ARE PREFERRED FOR RECPs, ALTHOUGH SOME JURISDICTIONS MAY ALLOW OTHER MATERIALS IN SOME APPLICATIONS.

3. IN AREAS WHERE ECBs ARE SHOWN ON THE PLANS, THE PERMITTEE SHALL PLACE TOPSOIL AND PERFORM FINAL GRADING, SURFACE PREPARATION, AND SEEDING AND MULCHING. SUBGRADE SHALL BE SMOOTH AND MOIST PRIOR TO ECB INSTALLATION AND THE ECB SHALL BE IN FULL CONTACT WITH SUBGRADE. NO GAPS OR VOIDS SHALL EXIST UNDER THE BLANKET.

4. PERIMETER ANCHOR TRENCH SHALL BE USED ALONG THE OUTSIDE PERIMETER OF ALL BLANKET AREAS.

5. JOINT ANCHOR TRENCH SHALL BE USED TO JOIN ROLLS OF ECBs TOGETHER (LONGITUDINALLY AND TRANSVERSELY) FOR ALL ECBs EXCEPT STRAW WHICH MAY USE AN OVERLAPPING JOINT.

6. INTERMEDIATE ANCHOR TRENCH SHALL BE USED AT SPACING OF ONE–HALF ROLL LENGTH FOR COCONUT AND EXCELSIOR ECBs.

7. OVERLAPPING JOINT DETAIL SHALL BE USED TO JOIN ROLLS OF ECBs TOGETHER FOR ECBs ON SLOPES.

8. MATERIAL SPECIFICATIONS OF ECBs SHALL CONFORM TO TABLE ECB–1.

9. ANY AREAS OF SEEDING AND MULCHING DISTURBED IN THE PROCESS OF INSTALLING ECBS SHALL BE RESEEDED AND MULCHED.

10. DETAILS ON DESIGN PLANS FOR MAJOR DRAINAGEWAY STABILIZATION WILL GOVERN IF DIFFERENT FROM THOSE SHOWN HERE.

TABLE ECB–1. ECB MATERIAL SPECIFICATIONS

TYPE	COCONUT CONTENT	STRAW CONTENT	EXCELSIOR CONTENT	RECOMMENDED NETTING**
STRAW*	–	100%	–	DOUBLE/ NATURAL
STRAW–COCONUT	30% MIN	70% MAX	–	DOUBLE/ NATURAL
COCONUT	100%	–	–	DOUBLE/ NATURAL
EXCELSIOR	–	–	100%	DOUBLE/ NATURAL

*STRAW ECBs MAY ONLY BE USED OUTSIDE OF STREAMS AND DRAINAGE CHANNEL.
**ALTERNATE NETTING MAY BE ACCEPTABLE IN SOME JURISDICTIONS

EPC 6/23/2020

FOR LOCATING & MARKING GAS, ELECTRIC, WATER & TELEPHONE LINES
FOR BURIED UTILITY INFORMATION
48 HRS BEFORE YOU DIG
CALL 1–800–922–1987

BRANDING IRON AT STERLING RANCH FILING NO. 2
GRADING & EROSION CONTROL DETAILS
DATE: 03/23/2020
SHEET 7 OF 7
GR07
PROJECT NO. 09–012
SCALE: HORIZONTAL: N/A VERTICAL: N/A
DESIGNED BY: DLM
DRAWN BY: JWP
CHECKED BY: VAS

102 E. PIKES PEAK AVE. 5TH FLOOR
COLORADO SPRINGS, CO 80903
PHONE: 719.955.5485
CIVIL CONSULTANTS, INC.
VIRGIL A. SANCHEZ, COLORADO P.E. NO. 37160
FOR AND ON BEHALF OF MASS CIVIL CONSULTANTS, INC.
COLORADO REGISTERED PROFESSIONAL ENGINEER 37160

REVISIONS: NO. | DATE: | BY: | DESCRIPTION: | APRV'D. BY: | DATE:

THE ENGINEER PREPARING THESE PLANS WILL NOT BE RESPONSIBLE OR LIABLE FOR UNAUTHORIZED CHANGES TO OR USES OF THESE PLANS. ALL CHANGES TO THE PLANS MUST BE IN WRITING AND MUST BE APPROVED BY THE PREPARER OF THESE PLANS.

CAUTION

File: Q:\09012A\Challenger East\dwg\Const Dwg\Grading & Erosion Control\GR07.dwg Plotstamp: 3/25/2020 3:08 PM