SITE PLAN DISCLAIMER:

PROPERTY LINES AND STRUCTURES HAVE BEEN DIGITIZED FROM PREVIOUS PLAN SETS. TOWER ENGINEERING PROFESSIONALS HAS NOT COMPLETED A SITE SURVEY AND THEREFORE MAKES NO CLAIMS AS TO THE ACCURACY OF INFORMATION DEPICTED ON THIS SHEET.

EXISTING LEASE AREA DESCRIPTION:

A PORTION OF THE NORTHWEST QUARTER OF SECTION 7 AND THE SOUTWEST QUARTER OF SECTION 6, TOWNSHIP 12 SOUTH, RANGE 66 WEST OF THE 6TH PRINCIPAL MERIDIAN, CONTY OF EL PASO, STATE OF COLORADO, BEING A PORTION OF THAT CERTAIN PARCEL DESCRIBED IN BOOK 2948, PAGE 996, RECORDS OF SAID COUNTY AND MORE PARTICULARLY DESCRIBED AS FOLLOWS:

COMMENCING AT THE SOUTHWEST CORNER OF SAID PARCEL, THE BASIS OF BEARINGS FOR THIS DESCRIPTION BEING THE SOUTHWESTERLY LINE OF SAID PARCEL WITH A BEARING OF N 25°23'01" W;

THENCE FROM SAID POINT OF COMMENCEMENT, N 465148 E, A DISTANCE OF 743.71 FEET TO THE POINT OF BEGINNING,

THENCE N 36 35'44" E, A DISTANCE OF 17.00 FEET: THENCE S $32416 E, A DISTANCE OF 40.00 FEET;
THENCE N 36°35'44" E, A DISTANCE OF 8.50 FEET:
THENCE S 53°24'16" E, A DISTANCE OF 23.00 FEET: THENCE S 36 35'44" W, A DISTANCE OF 34.00 FEET: THENCE N 53°24'16" W, A DISTANCE OF 23.00 FEET
THENCE N 36°35'44" E, A DISTANCE OF 8.50 FEET:
THENCE N 53°24'16" W, A DISTANCE OF 40.00 FEET TO THE POINT OF BEGINNING.
CONTAINING 1462 SQ. FT. OR 0.03 ACRES MORE OR LESS

Approved
By: Justin Kilgore
Planning Manager
Date:02/28/2023
El Paso County Planning & Community Development

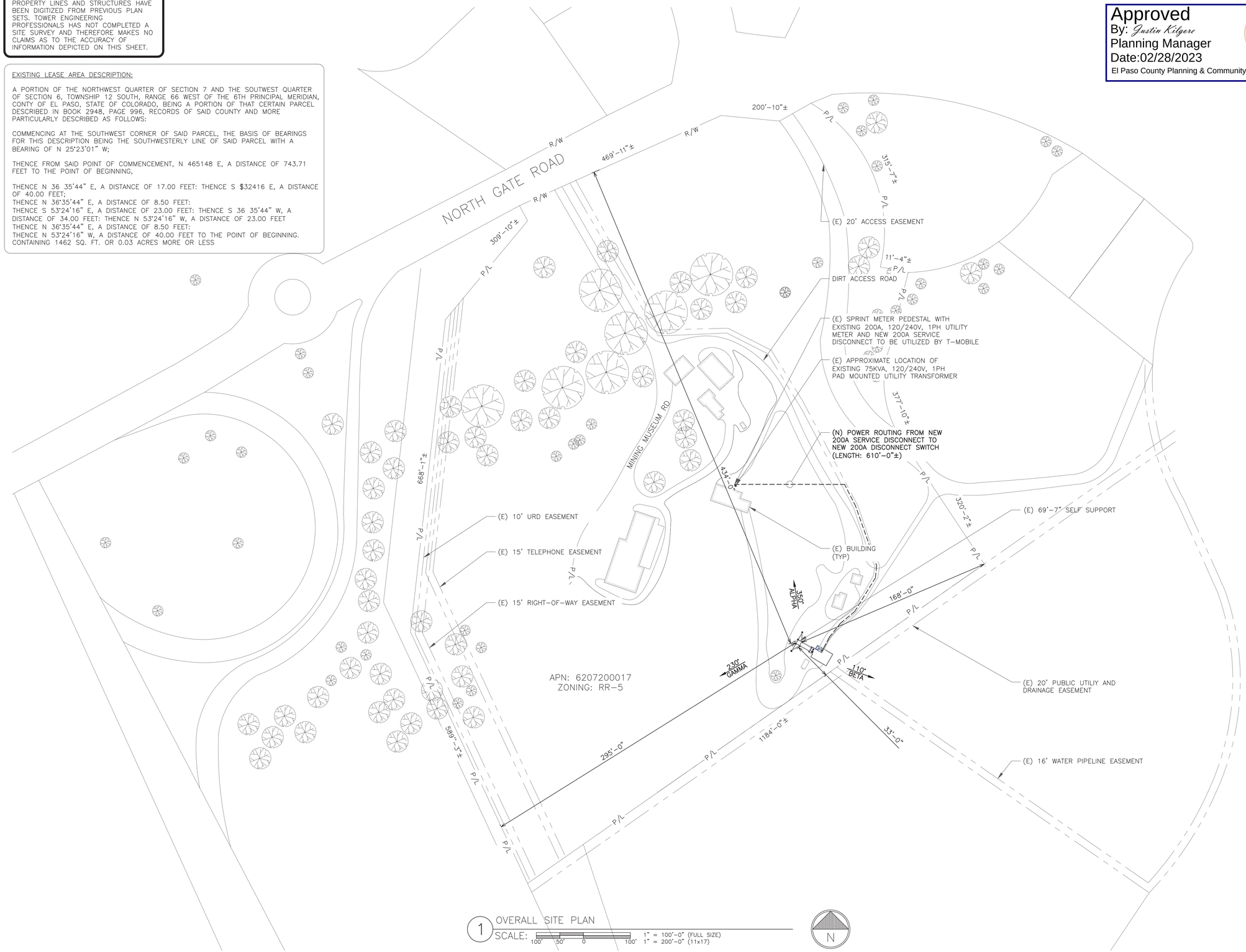

1 OVERALL SITE PLAN
SCALE: 100' 50' 0 100' 1" = 100'-0" (FULL SIZE) 1" = 200'-0" (11x17)

T-Mobile
2323 DELGANY STREET
DENVER, CO 80216

CROWN CASTLE
200 SPECTRUM CENTER DRIVE,
SUITE 1700 & 1800
IRVINE, CA 92618

TOWER ENGINEERING PROFESSIONALS
4710 E ELWOOD ST, STE 9
PHOENIX, AZ 85040
OFFICE: (480) 285-0036
www.tepgroup.net

T-MOBILE
SITE NUMBER: **DN06123A**
(SPRINT RETAIN)

BU #: **877092**
F3/FILL-IN/COLORADO SPGS/CSP18

125 NORTH GATE BLVD
COLORADO SPRINGS, CO
80921

EXISTING 69'-7"
SELF SUPPORT

ISSUED FOR:

REV	DATE	DRWN	DESCRIPTION	DES./QA
5	09/12/22	GBP	CONSTRUCTION	JFJ
6	09/27/22	DRC	CONSTRUCTION	JFJ
7	11/03/22	KDP	CONSTRUCTION	JFJ
8	02/02/23	DRS	CONSTRUCTION	JFJ
9	02/16/23	SSO	CONSTRUCTION	JFJ

COLORADO ANDREW RAMAR BERGLUND 58272 PROFESSIONAL ENGINEER

02/16/23

Andrew R. Berglund, P.E.
Professional Engineer License: #58272

IT IS A VIOLATION OF LAW FOR ANY PERSON, UNLESS THEY ARE ACTING UNDER THE DIRECTION OF A LICENSED PROFESSIONAL ENGINEER, TO ALTER THIS DOCUMENT.

SHEET NUMBER: C-1.1
REVISION: 9

T-Mobile

SITE NUMBER: DN06123A
SITE NAME: DN63XC091
SITE TYPE: SELF SUPPORT
TOWER HEIGHT: 69'-7"

BUSINESS UNIT #: 877092
SITE ADDRESS: 125 NORTH GATE RD
COLORADO SPRINGS, CO 80921
COUNTY: EL PASO

T-MOBILE PROJECT: SPRINT RETAIN

SITE INFORMATION

CROWN CASTLE USA INC. SITE NAME:	F3/FILL-IN/COLORADO SPGS/CSP18
SITE ADDRESS:	125 NORTH GATE RD COLORADO SPRINGS, CO 80921
COUNTY:	EL PASO
MAP/PARCEL #:	6207200017
AREA OF CONSTRUCTION:	EXISTING
LATITUDE:	39° 01' 30.72"
LONGITUDE:	-104° 49' 38.65"
LAT/LONG TYPE:	NAD83
GROUND ELEVATION:	6,788 FT
CURRENT ZONING:	RR-5
JURISDICTION:	EL PASO COUNTY
OCCUPANCY CLASSIFICATION:	U
TYPE OF CONSTRUCTION:	IIB
A.D.A. COMPLIANCE:	FACILITY IS UNMANNED AND NOT FOR HUMAN HABITATION
PROPERTY OWNER:	WESTERN MUSEUM OF MINING INDUSTRY 125 NORTH GATE RD COLORADO SPRINGS CO, 80921
TOWER OWNER:	GLOBAL SIGNAL ACQUISITIONS II LLC 2000 CORPORATE DRIVE CANONSBURG, PA 15317
CARRIER/APPLICANT:	T-MOBILE 2323 DELGANY STREET DENVER, CO 80216
ELECTRIC PROVIDER:	MOUNTAIN VIEW ELECTRIC
TELCO PROVIDER:	CENTURYLINK

DRAWING INDEX

SHEET #	SHEET DESCRIPTION
T-1	TITLE SHEET
T-2	GENERAL NOTES
C-1.1	OVERALL SITE PLAN
C-1.2	EXISTING EQUIPMENT LAYOUT
C-1.3	NEW EQUIPMENT LAYOUT
C-2	TOWER ELEVATIONS
C-3	ANTENNA PLANS
C-4	FINAL EQUIPMENT SCHEDULE
C-5.1	EQUIPMENT SPECS
C-5.2	EQUIPMENT SPECS
C-5.3	EQUIPMENT SPECS
E-1	ELECTRICAL DETAILS
E-2	ELECTRICAL DETAILS
G-1	GROUNDING DETAILS
ATTACHED	RF CABLING DIAGRAM

ALL DRAWINGS CONTAINED HEREIN ARE FORMATTED FOR FULL SIZE. CONTRACTOR SHALL VERIFY ALL PLANS AND EXISTING DIMENSIONS AND CONDITIONS ON THE JOB SITE AND SHALL IMMEDIATELY NOTIFY THE ENGINEER IN WRITING OF ANY DISCREPANCIES BEFORE PROCEEDING WITH THE WORK OR BE RESPONSIBLE FOR SAME.

CALL COLORADO ONE CALL
(800) 922-1987
CALL 3 WORKING DAYS
BEFORE YOU DIG!

LOCATION MAP

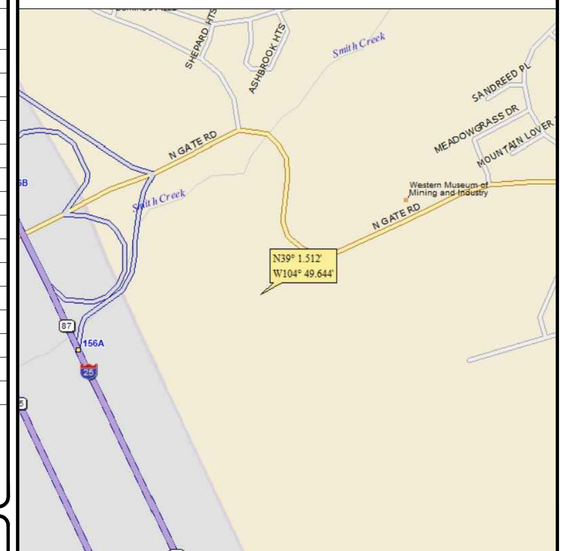

SITE PHOTO

PROJECT TEAM

A&E FIRM:	TOWER ENGINEERING PROFESSIONALS 4710 E ELWOOD ST, STE 9 PHOENIX, AZ 85040 OFFICE: (480) 285-0036
CROWN CASTLE USA INC. DISTRICT CONTACTS:	200 SPECTRUM CENTER DRIVE, SUITE 1700 & 1800 IRVINE, CA 92618 BRYCE NORTHCUTT - PROJECT MANAGER BRYCENORTHCUTT@CROWNCASTLE.COM JONATHAN BAIN - CONSTRUCTION MANAGER JONATHANBAIN@CROWNCASTLE.COM

CHARITABLE	29.000	26.63 Acres
RESIDENTIAL CHARITABLE	6.950	1.76 Acres

Legal Description:	**LOT 1 BLK 1 MINING MUSEUM SUB NO 1, TOG WIH VAC OLD NORTH GATE RD ADJ BY REC #208007172, EX THAT PT CONV BY REC #208013928, TOG W/ THAT PT DESC BY REC # 208013927**

PROJECT DESCRIPTION

THE PURPOSE OF THIS PROJECT IS TO ENHANCE BROADBAND CONNECTIVITY AND CAPACITY TO THE EXISTING ELIGIBLE WIRELESS FACILITY.

TOWER SCOPE OF WORK:
- REMOVE UNUSED EQUIPMENT
- REMOVE EXISTING CONCEALMENT
- ADD (3) FFVV-65C-R3-V1 ANTENNAS, (1) PER SECTOR
- ADD (3) AEHC ANTENNAS, (1) PER SECTOR
- ADD (3) RADIO AHLOA, (1) PER SECTOR
- ADD (3) RADIO AHFIG, (1) PER SECTOR
- ADD (2) HCS 2.0 PART 1 PENDANTS
- ADD (2) HCS 2.0 HYBRID CABLES
- ADD (3) PV-SFA10-B-R1 SECTOR MOUNT
- ADD (9) SITE PRO 1 R5-LL (8') MOUNT PIPES

GROUND SCOPE OF WORK:
- REMOVE UNUSED EQUIPMENT
- ADD (2) ASIBs
- ADD (2) ASIKs
- ADD (1) FSMF
- ADD (3) ABIAs
- ADD (6) ABILs
- ADD (3) ABICs
- ADD (2) AMIAs
- ADD (1) GENERIC 600A CABINET
- ADD (1) GENERIC BATTERY CABINET FOR 600A SSC
- ADD (1) VOLTAGE BOOSTER
- ADD (1) EXTRA BOOSTER AMPLIFIER
- ADD (2) HCS 2.0 JUNCTION BOXES

APPLICABLE CODES/REFERENCE DOCUMENTS

ALL WORK SHALL BE PERFORMED AND MATERIALS INSTALLED IN ACCORDANCE WITH THE CURRENT EDITIONS OF THE FOLLOWING CODES AS ADOPTED BY THE LOCAL GOVERNING AUTHORITIES. NOTHING IN THESE PLANS IS TO BE CONSTRUED TO PERMIT WORK NOT CONFORMING TO THESE CODES:

CODE TYPE	CODE
BUILDING	2018 IBC
MECHANICAL	2018 IMC
ELECTRICAL	2017 NEC

REFERENCE DOCUMENTS:

STRUCTURAL ANALYSIS:	B+T GROUP
DATED:	04/06/2022
MOUNT ANALYSIS:	INFINIGY
DATED:	03/21/2022
RFDS REVISION:	1
DATED:	01/25/2021
ORDER ID:	608670
REVISION:	0

NOTE:
PRIOR TO ACCESSING/ENTERING THE SITE YOU MUST CONTACT THE CROWN NOC AT (800) 788-7011 & CROWN CONSTRUCTION MANAGER.

T-Mobile
2323 DELGANY STREET
DENVER, CO 80216

CROWN CASTLE
200 SPECTRUM CENTER DRIVE,
SUITE 1700 & 1800
IRVINE, CA 92618

TOWER ENGINEERING PROFESSIONALS
4710 E ELWOOD ST, STE 9
PHOENIX, AZ 85040
OFFICE: (480) 285-0036
www.tepgroup.net

T-MOBILE
SITE NUMBER: **DN06123A**
(SPRINT RETAIN)

BU #: **877092**
F3/FILL-IN/COLORADO SPGS/CSP18

255 NORTH GATE BLVD
COLORADO SPRINGS, CO
80921

EXISTING 69'-7"
SELF SUPPORT

ISSUED FOR:

REV	DATE	DRWN	DESCRIPTION	DES./QA
0	05/05/21	VBP	CONSTRUCTION	JFJ
1	05/24/21	JLB	CONSTRUCTION	JFJ
2	06/21/21	AOW	CONSTRUCTION	JFJ
3	09/16/21	GVM	CONSTRUCTION	JFJ
4	04/14/22	PSS	CONSTRUCTION	JFJ

04/14/22

Andrew R. Berglund, P.E.
Professional Engineer License: #58272

IT IS A VIOLATION OF LAW FOR ANY PERSON, UNLESS THEY ARE ACTING UNDER THE DIRECTION OF A LICENSED PROFESSIONAL ENGINEER, TO ALTER THIS DOCUMENT.

SHEET NUMBER: T-1
REVISION: 4

CROWN CASTLE USA INC. SITE ACTIVITY REQUIREMENTS:

1. NOTICE TO PROCEED– NO WORK SHALL COMMENCE PRIOR TO CROWN CASTLE USA INC. WRITTEN NOTICE TO PROCEED (NTP) AND THE ISSUANCE OF A PURCHASE ORDER. PRIOR TO ACCESSING/ENTERING THE SITE YOU MUST CONTACT THE CROWN CASTLE USA INC. NOC AT 800–788–7011 & THE CROWN CASTLE USA INC. CONSTRUCTION MANAGER.
2. "LOOK UP" – CROWN CASTLE USA INC. SAFETY CLIMB REQUIREMENT:
THE INTEGRITY OF THE SAFETY CLIMB AND ALL COMPONENTS OF THE CLIMBING FACILITY SHALL BE CONSIDERED DURING ALL STAGES OF DESIGN, INSTALLATION, AND INSPECTION. TOWER MODIFICATION, MOUNT REINFORCEMENTS, AND/OR EQUIPMENT INSTALLATIONS SHALL NOT COMPROMISE THE INTEGRITY OR FUNCTIONAL USE OF THE SAFETY CLIMB OR ANY COMPONENTS OF THE CLIMBING FACILITY ON THE STRUCTURE. THIS SHALL INCLUDE, BUT NOT BE LIMITED TO: PINCHING OF THE WIRE ROPE, BENDING OF THE WIRE ROPE FROM ITS SUPPORTS, DIRECT CONTACT OR CLOSE PROXIMITY TO THE WIRE ROPE WHICH MAY CAUSE FRICTIONAL WEAR, IMPACT TO THE ANCHORAGE POINTS IN ANY WAY, OR TO IMPEDE/BLOCK ITS INTENDED USE. ANY COMPROMISED SAFETY CLIMB, INCLUDING EXISTING CONDITIONS MUST BE TAGGED OUT AND REPORTED TO YOUR CROWN CASTLE USA INC. POC OR CALL THE NOC TO GENERATE A SAFETY CLIMB MAINTENANCE AND CONTRACTOR NOTICE TICKET.
3. PRIOR TO THE START OF CONSTRUCTION, ALL REQUIRED JURISDICTIONAL PERMITS SHALL BE OBTAINED. THIS INCLUDES, BUT IS NOT LIMITED TO, BUILDING, ELECTRICAL, MECHANICAL, FIRE, FLOOD ZONE, ENVIRONMENTAL, AND ZONING. AFTER ONSITE ACTIVITIES AND CONSTRUCTION ARE COMPLETED, ALL REQUIRED PERMITS SHALL BE SATISFIED AND CLOSED OUT ACCORDING TO LOCAL JURISDICTIONAL REQUIREMENTS.
4. ALL CONSTRUCTION MEANS AND METHODS; INCLUDING BUT NOT LIMITED TO, ERECTION PLANS, RIGGING PLANS, CLIMBING PLANS, AND RESCUE PLANS SHALL BE THE RESPONSIBILITY OF THE GENERAL CONTRACTOR RESPONSIBLE FOR THE EXECUTION OF THE WORK CONTAINED HEREIN, AND SHALL MEET ANSI/ASSE A10.48 (LATEST EDITION); FEDERAL, STATE, AND LOCAL REGULATIONS; AND ANY APPLICABLE INDUSTRY CONSENSUS STANDARDS RELATED TO THE CONSTRUCTION ACTIVITIES BEING PERFORMED. ALL RIGGING PLANS SHALL ADHERE TO ANSI/ASSE A10.48 (LATEST EDITION) AND CROWN CASTLE USA INC. STANDARD CED–STD–10253, INCLUDING THE REQUIRED INVOLVEMENT OF A QUALIFIED ENGINEER FOR CLASS IV CONSTRUCTION, TO CERTIFY THE SUPPORTING STRUCTURE(S) IN ACCORDANCE WITH ANSI/TIA–322 (LATEST EDITION).
5. ALL SITE WORK TO COMPLY WITH QAS–STD–10068 "INSTALLATION STANDARDS FOR CONSTRUCTION ACTIVITIES ON CROWN CASTLE USA INC. TOWER SITE," CED–STD–10294 "STANDARD FOR INSTALLATION OF MOUNTS AND APPURTENANCES," AND LATEST VERSION OF ANSI/TIA–1019–A–2012 "STANDARD FOR INSTALLATION, ALTERATION, AND MAINTENANCE OF ANTENNA SUPPORTING STRUCTURES AND ANTENNAS."
6. IF THE SPECIFIED EQUIPMENT CAN NOT BE INSTALLED AS SHOWN ON THESE DRAWINGS, THE CONTRACTOR SHALL PROPOSE AN ALTERNATIVE INSTALLATION FOR APPROVAL BY CROWN CASTLE USA INC. PRIOR TO PROCEEDING WITH ANY SUCH CHANGE OF INSTALLATION.
7. ALL MATERIALS FURNISHED AND INSTALLED SHALL BE IN STRICT ACCORDANCE WITH ALL APPLICABLE CODES, REGULATIONS AND ORDINANCES. CONTRACTOR SHALL ISSUE ALL APPROPRIATE NOTICES AND COMPLY WITH ALL LAWS, ORDINANCES, RULES, REGULATIONS AND LAWFUL ORDERS OF ANY PUBLIC AUTHORITY REGARDING THE PERFORMANCE OF THE WORK. ALL WORK CARRIED OUT SHALL COMPLY WITH ALL APPLICABLE MUNICIPAL AND UTILITY COMPANY SPECIFICATIONS AND LOCAL JURISDICTIONAL CODES, ORDINANCES AND APPLICABLE REGULATIONS.
8. THE CONTRACTOR SHALL INSTALL ALL EQUIPMENT AND MATERIALS IN ACCORDANCE WITH MANUFACTURER'S RECOMMENDATIONS UNLESS SPECIFICALLY STATED OTHERWISE.
9. THE CONTRACTOR SHALL CONTACT UTILITY LOCATING SERVICES PRIOR TO THE START OF CONSTRUCTION.
10. ALL EXISTING ACTIVE SEWER, WATER, GAS, ELECTRIC AND OTHER UTILITIES WHERE ENCOUNTERED IN THE WORK, SHALL BE PROTECTED AT ALL TIMES AND WHERE REQUIRED FOR THE PROPER EXECUTION OF THE WORK, SHALL BE RELOCATED AS DIRECTED BY CONTRACTOR. EXTREME CAUTION SHOULD BE USED BY THE CONTRACTOR WHEN EXCAVATING OR DRILLING PIERS AROUND OR NEAR UTILITIES. CONTRACTOR SHALL PROVIDE SAFETY TRAINING FOR THE WORKING CREW. THIS WILL INCLUDE BUT NOT BE LIMITED TO A) FALL PROTECTION B) CONFINED SPACE C) ELECTRICAL SAFETY D) TRENCHING AND EXCAVATION E) CONSTRUCTION SAFETY PROCEDURES.
11. ALL SITE WORK SHALL BE AS INDICATED ON THE STAMPED CONSTRUCTION DRAWINGS AND PROJECT SPECIFICATIONS, LATEST APPROVED REVISION.
12. CONTRACTOR SHALL KEEP THE SITE FREE FROM ACCUMULATING WASTE MATERIAL, DEBRIS, AND TRASH AT THE COMPLETION OF THE WORK. IF NECESSARY, RUBBISH, STUMPS, DEBRIS, STICKS, STONES AND OTHER REFUSE SHALL BE REMOVED FROM THE SITE AND DISPOSED OF LEGALLY.
13. ALL EXISTING INACTIVE SEWER, WATER, GAS, ELECTRIC AND OTHER UTILITIES, WHICH INTERFERE WITH THE EXECUTION OF THE WORK, SHALL BE REMOVED AND/OR CAPPED, PLUGGED OR OTHERWISE DISCONTINUED AT POINTS WHICH WILL NOT INTERFERE WITH THE EXECUTION OF THE WORK, SUBJECT TO THE APPROVAL OF CONTRACTOR, TOWER OWNER, CROWN CASTLE USA INC., AND/OR LOCAL UTILITIES.
14. THE CONTRACTOR SHALL PROVIDE SITE SIGNAGE IN ACCORDANCE WITH THE TECHNICAL SPECIFICATION FOR SITE SIGNAGE REQUIRED BY LOCAL JURISDICTION AND SIGNAGE REQUIRED ON INDIVIDUAL PIECES OF EQUIPMENT, ROOMS, AND SHELTERS.
15. THE SITE SHALL BE GRADED TO CAUSE SURFACE WATER TO FLOW AWAY FROM THE CARRIER'S EQUIPMENT AND TOWER AREAS.
16. THE SUB GRADE SHALL BE COMPACTED AND BROUGHT TO A SMOOTH UNIFORM GRADE PRIOR TO FINISHED SURFACE APPLICATION.
17. THE AREAS OF THE OWNERS PROPERTY DISTURBED BY THE WORK AND NOT COVERED BY THE TOWER, EQUIPMENT OR DRIVEWAY, SHALL BE GRADED TO A UNIFORM SLOPE, AND STABILIZED TO PREVENT EROSION AS SPECIFIED ON THE CONSTRUCTION DRAWINGS AND/OR PROJECT SPECIFICATIONS.
18. CONTRACTOR SHALL MINIMIZE DISTURBANCE TO EXISTING SITE DURING CONSTRUCTION. EROSION CONTROL MEASURES, IF REQUIRED DURING CONSTRUCTION, SHALL BE IN CONFORMANCE WITH THE LOCAL GUIDELINES FOR EROSION AND SEDIMENT CONTROL.
19. THE CONTRACTOR SHALL PROTECT EXISTING IMPROVEMENTS, PAVEMENTS, CURBS, LANDSCAPING AND STRUCTURES. ANY DAMAGED PART SHALL BE REPAIRED AT CONTRACTOR'S EXPENSE TO THE SATISFACTION OF OWNER.
20. CONTRACTOR SHALL LEGALLY AND PROPERLY DISPOSE OF ALL SCRAP MATERIALS SUCH AS COAXIAL CABLES AND OTHER ITEMS REMOVED FROM THE EXISTING FACILITY. ANTENNAS REMOVED SHALL BE RETURNED TO THE OWNER'S DESIGNATED LOCATION.
21. CONTRACTOR SHALL LEAVE PREMISES IN CLEAN CONDITION. TRASH AND DEBRIS SHOULD BE REMOVED FROM SITE ON A DAILY BASIS.
22. NO FILL OR EMBANKMENT MATERIAL SHALL BE PLACED ON FROZEN GROUND. FROZEN MATERIALS, SNOW OR ICE SHALL NOT BE PLACED IN ANY FILL OR EMBANKMENT.

GENERAL NOTES:

1. FOR THE PURPOSE OF CONSTRUCTION DRAWING, THE FOLLOWING DEFINITIONS SHALL APPLY:
CONTRACTOR: GENERAL CONTRACTOR RESPONSIBLE FOR CONSTRUCTION
CARRIER: T–MOBILE
TOWER OWNER: CROWN CASTLE USA INC.
2. THESE DRAWINGS HAVE BEEN PREPARED USING STANDARDS OF PROFESSIONAL CARE AND COMPLETENESS NORMALLY EXERCISED UNDER SIMILAR CIRCUMSTANCES BY REPUTABLE ENGINEERS IN THIS OR SIMILAR LOCALITIES. IT IS ASSUMED THAT THE WORK DEPICTED WILL BE PERFORMED BY AN EXPERIENCED CONTRACTOR AND/OR WORKPEOPLE WHO HAVE A WORKING KNOWLEDGE OF THE APPLICABLE CODE STANDARDS AND REQUIREMENTS AND OF INDUSTRY ACCEPTED STANDARD GOOD PRACTICE. AS NOT EVERY CONDITION OR ELEMENT IS (OR CAN BE) EXPLICITLY SHOWN ON THESE DRAWINGS, THE CONTRACTOR SHALL USE INDUSTRY ACCEPTED STANDARD GOOD PRACTICE FOR MISCELLANEOUS WORK NOT EXPLICITLY SHOWN.
3. THESE DRAWINGS REPRESENT THE FINISHED STRUCTURE. THEY DO NOT INDICATE THE MEANS OR METHODS OF CONSTRUCTION. THE CONTRACTOR SHALL BE SOLELY RESPONSIBLE FOR THE CONSTRUCTION MEANS, METHODS, TECHNIQUES, SEQUENCES, AND PROCEDURES. THE CONTRACTOR SHALL PROVIDE ALL MEASURES NECESSARY FOR PROTECTION OF LIFE AND PROPERTY DURING CONSTRUCTION. SUCH MEASURES SHALL INCLUDE, BUT NOT BE LIMITED TO, BRACING, FORMWORK, SHORING, ETC. SITE VISITS BY THE ENGINEER OR HIS REPRESENTATIVE WILL NOT INCLUDE INSPECTION OF THESE ITEMS AND IS FOR STRUCTURAL OBSERVATION OF THE FINISHED STRUCTURE ONLY.
4. NOTES AND DETAILS IN THE CONSTRUCTION DRAWINGS SHALL TAKE PRECEDENCE OVER GENERAL NOTES AND TYPICAL DETAILS. WHERE NO DETAILS ARE SHOWN, CONSTRUCTION SHALL CONFORM TO SIMILAR WORK ON THE PROJECT, AND/OR AS PROVIDED FOR IN THE CONTRACT DOCUMENTS. WHERE DISCREPANCIES OCCUR BETWEEN PLANS, DETAILS, GENERAL NOTES, AND SPECIFICATIONS, THE GREATER, MORE STRICT REQUIREMENTS, SHALL GOVERN. IF FURTHER CLARIFICATION IS REQUIRED CONTACT THE ENGINEER OF RECORD.
5. SUBSTANTIAL EFFORT HAS BEEN MADE TO PROVIDE ACCURATE DIMENSIONS AND MEASUREMENTS ON THE DRAWINGS TO ASSIST IN THE FABRICATION AND/OR PLACEMENT OF CONSTRUCTION ELEMENTS BUT IT IS THE SOLE RESPONSIBILITY OF THE CONTRACTOR TO FIELD VERIFY THE DIMENSIONS, MEASUREMENTS, AND/OR CLEARANCES SHOWN IN THE CONSTRUCTION DRAWINGS PRIOR TO FABRICATION OR CUTTING OF ANY NEW OR EXISTING CONSTRUCTION ELEMENTS. IF IT IS DETERMINED THAT THERE ARE DISCREPANCIES AND/OR CONFLICTS WITH THE CONSTRUCTION DRAWINGS THE ENGINEER OF RECORD IS TO BE NOTIFIED AS SOON AS POSSIBLE.
6. PRIOR TO THE SUBMISSION OF BIDS, THE BIDDING CONTRACTOR SHALL VISIT THE CELL SITE TO FAMILIARIZE WITH THE EXISTING CONDITIONS AND TO CONFIRM THAT THE WORK CAN BE ACCOMPLISHED AS SHOWN ON THE CONSTRUCTION DRAWINGS. ANY DISCREPANCY FOUND SHALL BE BROUGHT TO THE ATTENTION OF CROWN CASTLE.
7. ALL MATERIALS FURNISHED AND INSTALLED SHALL BE IN STRICT ACCORDANCE WITH ALL APPLICABLE CODES, REGULATIONS AND ORDINANCES. CONTRACTOR SHALL ISSUE ALL APPROPRIATE NOTICES AND COMPLY WITH ALL LAWS, ORDINANCES, RULES, REGULATIONS AND LAWFUL ORDERS OF ANY PUBLIC AUTHORITY REGARDING THE PERFORMANCE OF THE WORK. ALL WORK CARRIED OUT SHALL COMPLY WITH ALL APPLICABLE MUNICIPAL AND UTILITY COMPANY SPECIFICATIONS AND LOCAL JURISDICTIONAL CODES, ORDINANCES AND APPLICABLE REGULATIONS.
8. UNLESS NOTED OTHERWISE, THE WORK SHALL INCLUDE FURNISHING MATERIALS, EQUIPMENT, APPURTENANCES AND LABOR NECESSARY TO COMPLETE ALL INSTALLATIONS AS INDICATED ON THE DRAWINGS.
9. THE CONTRACTOR SHALL INSTALL ALL EQUIPMENT AND MATERIALS IN ACCORDANCE WITH MANUFACTURER'S RECOMMENDATIONS UNLESS SPECIFICALLY STATED OTHERWISE.
10. IF THE SPECIFIED EQUIPMENT CAN NOT BE INSTALLED AS SHOWN ON THESE DRAWINGS, THE CONTRACTOR SHALL PROPOSE AN ALTERNATIVE INSTALLATION FOR APPROVAL BY THE CARRIER AND CROWN CASTLE PRIOR TO PROCEEDING WITH ANY SUCH CHANGE OF INSTALLATION.
11. CONTRACTOR IS TO PERFORM A SITE INVESTIGATION AND IS TO DETERMINE THE BEST ROUTING OF ALL CONDUITS FOR POWER, AND TELCO AND FOR GROUNDING CABLES AS SHOWN IN THE POWER, TELCO, AND GROUNDING PLAN DRAWINGS.
12. THE CONTRACTOR SHALL PROTECT EXISTING IMPROVEMENTS, PAVEMENTS, CURBS, LANDSCAPING AND STRUCTURES. ANY DAMAGED PART SHALL BE REPAIRED AT CONTRACTOR'S EXPENSE TO THE SATISFACTION OF CROWN CASTLE USA INC.
13. CONTRACTOR SHALL LEGALLY AND PROPERLY DISPOSE OF ALL SCRAP MATERIALS SUCH AS COAXIAL CABLES AND OTHER ITEMS REMOVED FROM THE EXISTING FACILITY. ANTENNAS REMOVED SHALL BE RETURNED TO THE OWNER'S DESIGNATED LOCATION.
14. CONTRACTOR SHALL LEAVE PREMISES IN CLEAN CONDITION. TRASH AND DEBRIS SHOULD BE REMOVED FROM SITE ON A DAILY BASIS.

CONCRETE, FOUNDATIONS, AND REINFORCING STEEL:

1. ALL CONCRETE WORK SHALL BE IN ACCORDANCE WITH THE ACI 301, ACI 318, ACI 336, ASTM A184, ASTM A185 AND THE DESIGN AND CONSTRUCTION SPECIFICATION FOR CAST–IN–PLACE CONCRETE.
2. UNLESS NOTED OTHERWISE, SOIL BEARING PRESSURE USED FOR DESIGN OF SLABS AND FOUNDATIONS IS ASSUMED TO BE 1000 psf.
3. ALL CONCRETE SHALL HAVE A MINIMUM COMPRESSIVE STRENGTH (f'c) OF 3000 psi AT 28 DAYS, UNLESS NOTED OTHERWISE. NO MORE THAN 90 MINUTES SHALL ELAPSE FROM BATCH TIME TO TIME OF PLACEMENT UNLESS APPROVED BY THE ENGINEER OF RECORD. TEMPERATURE OF CONCRETE SHALL NOT EXCEED 90°f AT TIME OF PLACEMENT.
4. CONCRETE EXPOSED TO FREEZE–THAW CYCLES SHALL CONTAIN AIR ENTRAINING ADMIXTURES. AMOUNT OF AIR ENTRAINMENT TO BE BASED ON SIZE OF AGGREGATE AND F3 CLASS EXPOSURE (VERY SEVERE). CEMENT USED TO BE TYPE II PORTLAND CEMENT WITH A MAXIMUM WATER–TO–CEMENT RATIO (W/C) OF 0.45.
5. ALL STEEL REINFORCING SHALL CONFORM TO ASTM A615. ALL WELDED WIRE FABRIC (WWF) SHALL CONFORM TO ASTM A185. ALL SPLICES SHALL BE CLASS "B" TENSION SPLICES, UNLESS NOTED OTHERWISE. ALL HOOKS SHALL BE STANDARD 90 DEGREE HOOKS, UNLESS NOTED OTHERWISE. YIELD STRENGTH (Fy) OF STANDARD DEFORMED BARS ARE AS FOLLOWS:
#4 BARS AND SMALLER.......40 ksi
#5 BARS AND LARGER.......60 ksi
6. THE FOLLOWING MINIMUM CONCRETE COVER SHALL BE PROVIDED FOR REINFORCING STEEL UNLESS SHOWN OTHERWISE ON DRAWINGS:
CONCRETE CAST AGAINST AND PERMANENTLY EXPOSED TO EARTH.......3"
CONCRETE EXPOSED TO EARTH OR WEATHER:
#6 BARS AND LARGER.......2"
#5 BARS AND SMALLER.......1–1/2"
CONCRETE NOT EXPOSED TO EARTH OR WEATHER:
SLAB AND WALLS.......3/4"
BEAMS AND COLUMNS.......1–1/2"
7. A TOOLED EDGE OR A 3/4" CHAMFER SHALL BE PROVIDED AT ALL EXPOSED EDGES OF CONCRETE, UNLESS NOTED OTHERWISE, IN ACCORDANCE WITH ACI 301 SECTION 4.2.4.

ELECTRICAL INSTALLATION NOTES:

1. ALL ELECTRICAL WORK SHALL BE PERFORMED IN ACCORDANCE WITH THE PROJECT SPECIFICATIONS, NEC AND ALL APPLICABLE FEDERAL, STATE, AND LOCAL CODES/ORDINANCES.
2. CONDUIT ROUTINGS ARE SCHEMATIC. CONTRACTOR SHALL INSTALL CONDUITS SO THAT ACCESS TO EQUIPMENT IS NOT BLOCKED AND TRIP HAZARDS ARE ELIMINATED.
3. WIRING, RACEWAY AND SUPPORT METHODS AND MATERIALS SHALL COMPLY WITH THE REQUIREMENTS OF THE NEC.
4. ALL CIRCUITS SHALL BE SEGREGATED AND MAINTAIN MINIMUM CABLE SEPARATION AS REQUIRED BY THE NEC.
4.1. ALL EQUIPMENT SHALL BEAR THE UNDERWRITERS LABORATORIES LABEL OF APPROVAL, AND SHALL CONFORM TO REQUIREMENT OF THE NATIONAL ELECTRICAL CODE.
4.2. ALL OVERCURRENT DEVICES SHALL HAVE AN INTERRUPTING CURRENT RATING THAT SHALL BE GREATER THAN THE SHORT CIRCUIT CURRENT TO WHICH THEY ARE SUBJECTED, 22,000 AIC MINIMUM. VERYIFY AVAILABLE SHORT CIRCUIT CURRENT DOES NOT EXCEED THE RATING OF ELECTRICAL EQUIPMENT IN ACCORDANCE WITH ARTICLE 110.24 NEC OR THE MOST CURRENT ADOPTED CODE PRE THE GOVERNING JURISDICTION.
5. EACH END OF EVERY POWER PHASE CONDUCTOR, GROUNDING CONDUCTOR, AND TELCO CONDUCTOR OR CABLE SHALL BE LABELED WITH COLOR–CODED INSULATION OR ELECTRICAL TAPE (3M BRAND, 1/2" PLASTIC ELECTRICAL TAPE WITH UV PROTECTION, OR EQUAL). THE IDENTIFICATION METHOD SHALL CONFORM WITH NEC AND OSHA.
6. ALL ELECTRICAL COMPONENTS SHALL BE CLEARLY LABELED WITH LAMICOID TAGS SHOWING THEIR RATED VOLTAGE, PHASE CONFIGURATION, WIRE CONFIGURATION, POWER OR AMPACITY RATING AND BRANCH CIRCUIT ID NUMBERS (i.e. PANEL BOARD AND CIRCUIT ID'S).
7. PANEL BOARDS (ID NUMBERS) SHALL BE CLEARLY LABELED WITH PLASTIC LABELS.
8. ALL TIE WRAPS SHALL BE CUT FLUSH WITH APPROVED CUTTING TOOL TO REMOVE SHARP EDGES.
9. ALL POWER AND EQUIPMENT GROUND WIRING IN TUBING OR CONDUIT SHALL BE SINGLE COPPER CONDUCTOR (#14 OR LARGER) WITH TYPE THHW, THWN, THWN–2, XHHW, XHHW–2, THW, THW–2, RHW, OR RHW–2 INSULATION UNLESS OTHERWISE SPECIFIED.
10. SUPPLEMENTAL EQUIPMENT GROUND WIRING LOCATED INDOORS SHALL BE SINGLE COPPER CONDUCTOR (#6 OR LARGER) WITH TYPE THHW, THWN, THWN–2, XHHW, XHHW–2, THW, THW–2, RHW, OR RHW–2 INSULATION UNLESS OTHERWISE SPECIFIED.
11. POWER AND CONTROL WIRING IN FLEXIBLE CORD SHALL BE MULTI–CONDUCTOR, TYPE SOOW CORD (#14 OR LARGER) UNLESS OTHERWISE SPECIFIED.
12. POWER AND CONTROL WIRING FOR USE IN CABLE TRAY SHALL BE MULTI–CONDUCTOR, TYPE TC CABLE (#14 OR LARGER), WITH TYPE THHW, THWN, THWN–2, XHHW, XHHW–2, THW, THW–2, RHW, OR RHW–2 INSULATION UNLESS OTHERWISE SPECIFIED.
13. ALL POWER AND GROUNDING CONNECTIONS SHALL BE CRIMP–STYLE, COMPRESSION WIRE LUGS AND WIRE NUTS BY THOMAS AND BETTS (OR EQUAL). LUGS AND WIRE NUTS SHALL BE RATED FOR OPERATION NOT LESS THAN 75° C (90° C IF AVAILABLE).
14. RACEWAY AND CABLE TRAY SHALL BE LISTED OR LABELED FOR ELECTRICAL USE IN ACCORDANCE WITH NEMA, UL, ANSI/IEEE AND NEC.
15. ELECTRICAL METALLIC TUBING (EMT), INTERMEDIATE METAL CONDUIT (IMC), OR RIGID METAL CONDUIT (RMC) SHALL BE USED FOR EXPOSED INDOOR LOCATIONS.
16. ELECTRICAL METALLIC TUBING (EMT) OR METAL–CLAD CABLE (MC) SHALL BE USED FOR CONCEALED INDOOR LOCATIONS.
17. SCHEDULE 40 PVC UNDERGROUND ON STRAIGHTS AND SCHEDULE 80 PVC FOR ALL ELBOWS/90s AND ALL APPROVED ABOVE GRADE PVC CONDUIT.
18. LIQUID–TIGHT FLEXIBLE METALLIC CONDUIT (LIQUID–TITE FLEX) SHALL BE USED INDOORS AND OUTDOORS, WHERE VIBRATION OCCURS OR FLEXIBILITY IS NEEDED.
19. CONDUIT AND TUBING FITTINGS SHALL BE THREADED OR COMPRESSION–TYPE AND APPROVED FOR THE LOCATION USED. SET SCREW FITTINGS ARE NOT ACCEPTABLE.
20. CABINETS, BOXES AND WIRE WAYS SHALL BE LABELED FOR ELECTRICAL USE IN ACCORDANCE WITH NEMA, UL, ANSI/IEEE AND THE NEC.
21. WIREWAYS SHALL BE METAL WITH AN ENAMEL FINISH AND INCLUDE A HINGED COVER, DESIGNED TO SWING OPEN DOWNWARDS (WIREMOLD SPECMATE WIREWAY).
22. SLOTTED WIRING DUCT SHALL BE PVC AND INCLUDE COVER (PANDUIT TYPE E OR EQUAL).
23. CONDUITS SHALL BE FASTENED SECURELY IN PLACE WITH APPROVED NON–PERFORATED STRAPS AND HANGERS. EXPLOSIVE DEVICES (i.e. POWDER–ACTUATED) FOR ATTACHING HANGERS TO STRUCTURE WILL NOT BE PERMITTED. CLOSELY FOLLOW THE LINES OF THE STRUCTURE, MAINTAIN CLOSE PROXIMITY TO THE STRUCTURE AND KEEP CONDUITS IN TIGHT ENVELOPES. CHANGES IN DIRECTION TO ROUTE AROUND OBSTACLES SHALL BE MADE WITH CONDUIT OUTLET BODIES. CONDUIT SHALL BE INSTALLED IN A NEAT AND WORKMANLIKE MANNER. PARALLEL AND PERPENDICULAR TO STRUCTURE WALL AND CEILING LINES. ALL CONDUIT SHALL BE FISHED TO CLEAR OBSTRUCTIONS. ENDS OF CONDUITS SHALL BE TEMPORARILY CAPPED FLUSH TO FINISH GRADE TO PREVENT CONCRETE, PLASTER OR DIRT FROM ENTERING. CONDUITS SHALL BE RIGIDLY CLAMPED TO BOXES BY GALVANIZED MALLEABLE IRON BUSHING ON INSIDE AND GALVANIZED MALLEABLE IRON LOCKNUT ON OUTSIDE AND INSIDE.
24. EQUIPMENT CABINETS, TERMINAL BOXES, JUNCTION BOXES AND PULL BOXES SHALL BE GALVANIZED OR EPOXY–COATED SHEET STEEL. SHALL MEET OR EXCEED UL 50 AND BE RATED NEMA 1 (OR BETTER) FOR INTERIOR LOCATIONS AND NEMA 3R (OR BETTER) FOR EXTERIOR LOCATIONS.
25. METAL RECEPTACLE, SWITCH AND DEVICE BOXES SHALL BE GALVANIZED, EPOXY–COATED OR NON–CORRODING; SHALL MEET OR EXCEED UL 514A AND NEMA OS 1 AND BE RATED NEMA 1 (OR BETTER) FOR INTERIOR LOCATIONS AND WEATHER PROTECTED (WP OR BETTER) FOR EXTERIOR LOCATIONS.
26. NONMETALLIC RECEPTACLE, SWITCH AND DEVICE BOXES SHALL MEET OR EXCEED NEMA OS 2 (NEWEST REVISION) AND BE RATED NEMA 1 (OR BETTER) FOR INTERIOR LOCATIONS AND WEATHER PROTECTED (WP OR BETTER) FOR EXTERIOR LOCATIONS.
27. THE CONTRACTOR SHALL NOTIFY AND OBTAIN NECESSARY AUTHORIZATION FROM THE CARRIER AND/OR CROWN CASTLE USA INC. BEFORE COMMENCING WORK ON THE AC POWER DISTRIBUTION PANELS.
28. THE CONTRACTOR SHALL PROVIDE NECESSARY TAGGING ON THE BREAKERS, CABLES AND DISTRIBUTION PANELS IN ACCORDANCE WITH THE APPLICABLE CODES AND STANDARDS TO SAFEGUARD LIFE AND PROPERTY.
29. INSTALL LAMICOID LABEL ON THE METER CENTER TO SHOW "T–MOBILE".
30. ALL EMPTY/SPARE CONDUITS THAT ARE INSTALLED ARE TO HAVE A METERED MULE TAPE PULL CORD INSTALLED.

CONDUCTOR COLOR CODE

SYSTEM	CONDUCTOR	COLOR
120/240V, 1Ø	A PHASE	BLACK
	B PHASE	RED
	NEUTRAL	WHITE
	GROUND	GREEN
120/208V, 3Ø	A PHASE	BLACK
	B PHASE	RED
	C PHASE	BLUE
	NEUTRAL	WHITE
	GROUND	GREEN
277/480V, 3Ø	A PHASE	BROWN
	B PHASE	ORANGE OR PURPLE
	C PHASE	YELLOW
	NEUTRAL	GREY
	GROUND	GREEN
DC VOLTAGE	POS (+)	RED**
	NEG (–)	BLACK**

* SEE NEC 210.5(C)(1) AND (2)
** POLARITY MARKED AT TERMINATION

APWA UNIFORM COLOR CODE:

WHITE	PROPOSED EXCAVATION
PINK	TEMPORARY SURVEY MARKINGS
RED	ELECTRIC POWER LINES, CABLES, CONDUIT, AND LIGHTING CABLES
YELLOW	GAS, OIL, STEAM, PETROLEUM, OR GASEOUS MATERIALS
ORANGE	COMMUNICATION, ALARM OR SIGNAL LINES, CABLES, OR CONDUIT AND TRAFFIC LOOPS
BLUE	POTABLE WATER
PURPLE	RECLAIMED WATER, IRRIGATION, AND SLURRY LINES
GREEN	SEWERS AND DRAIN LINES

ABBREVIATIONS:

ANT	ANTENNA
(E)	EXISTING
FIF	FACILITY INTERFACE FRAME
GEN	GENERATOR
GPS	GLOBAL POSITIONING SYSTEM
GSM	GLOBAL SYSTEM FOR MOBILE
LTE	LONG TERM EVOLUTION
MGB	MASTER GROUND BAR
MW	MICROWAVE
(N)	NEW
NEC	NATIONAL ELECTRIC CODE
(P)	PROPOSED
PP	POWER PLANT
QTY	QUANTITY
RECT	RECTIFIER
RBS	RADIO BASE STATION
RET	REMOTE ELECTRIC TILT
RFDS	RADIO FREQUENCY DATA SHEET
RRH	REMOTE RADIO HEAD
RRU	REMOTE RADIO UNIT
SIAD	SMART INTEGRATED DEVICE
TMA	TOWER MOUNTED AMPLIFIER
TYP	TYPICAL
UMTS	UNIVERSAL MOBILE TELECOMMUNICATIONS SYSTEM
W.P.	WORK POINT

GREENFIELD GROUNDING NOTES:

1. ALL GROUND ELECTRODE SYSTEMS (INCLUDING TELECOMMUNICATION, RADIO, LIGHTNING PROTECTION AND AC POWER GES'S) SHALL BE BONDED TOGETHER AT OR BELOW GRADE, BY TWO OR MORE COPPER BONDING CONDUCTORS IN ACCORDANCE WITH THE NEC.
2. THE CONTRACTOR SHALL PERFORM IEEE FALL–OF–POTENTAL RESISTANCE TO EARTH TESTING (PER IEEE 1100 AND 81) FOR GROUND ELECTRODE SYSTEMS, THE CONTRACTOR SHALL FURNISH AND INSTALL SUPPLEMENTAL GROUND ELECTRODES AS NEEDED TO ACHIEVE A TEST RESULT OF 5 OHMS OR LESS.
3. THE CONTRACTOR IS RESPONSIBLE FOR PROPERLY SEQUENCING GROUNDING AND UNDERGROUND CONDUIT INSTALLATION AS TO PREVENT ANY LOSS OF CONTINUITY IN THE GROUNDING SYSTEM OR DAMAGE TO THE CONDUIT AND PROVIDE TESTING RESULTS.
4. METAL CONDUIT AND TRAY SHALL BE GROUNDED AND MADE ELECTRICALLY CONTINUOUS WITH LISTED BONDING FITTINGS OR BY BONDING ACROSS THE DISCONTINUITY WITH #6 COPPER WIRE UL APPROVED GROUNDING TYPE CONDUIT CLAMPS.
5. METAL RACEWAY SHALL NOT BE USED AS THE NEC REQUIRED EQUIPMENT GROUND CONDUCTOR. STRANDED COPPER CONDUCTORS WITH GREEN INSULATION, SIZED IN ACCORDANCE WITH THE NEC, SHALL BE FURNISHED AND INSTALLED WITH THE POWER CIRCUITS TO BTS EQUIPMENT.
6. EACH CABINET FRAME SHALL BE DIRECTLY CONNECTED TO THE MASTER GROUND BAR WITH GREEN INSULATED SUPPLEMENTAL EQUIPMENT GROUND WIRES, #6 STRANDED COPPER OR LARGER FOR INDOOR BTS; #2 BARE SOLID TINNED COPPER FOR OUTDOOR BTS.
7. CONNECTIONS TO THE GROUND BUS SHALL NOT BE DOUBLED UP OR STACKED BACK TO BACK CONNECTIONS ON OPPOSITE SIDE OF THE GROUND BUS ARE PERMITTED.
8. ALL EXTERIOR GROUND CONDUCTORS BETWEEN EQUIPMENT/GROUND BARS AND THE GROUND RING SHALL BE #2 SOLID TINNED COPPER UNLESS OTHERWISE INDICATED.
9. ALUMINUM CONDUCTOR OR COPPER CLAD STEEL CONDUCTOR SHALL NOT BE USED FOR GROUNDING CONNECTIONS.
10. USE OF 90° BENDS IN THE PROTECTION GROUNDING CONDUCTORS SHALL BE AVOIDED WHEN 45° BENDS CAN BE ADEQUATELY SUPPORTED.
11. EXOTHERMIC WELDS SHALL BE USED FOR ALL GROUNDING CONNECTIONS BELOW GRADE.
12. ALL GROUND CONNECTIONS ABOVE GRADE (INTERIOR AND EXTERIOR) SHALL BE FORMED USING HIGH PRESS CRIMPS.
13. COMPRESSION GROUND CONNECTIONS MAY BE REPLACED BY EXOTHERMIC WELD CONNECTIONS.
14. ICE BRIDGE BONDING CONDUCTORS SHALL BE EXOTHERMICALLY BONDED OR BOLTED TO THE BRIDGE AND THE TOWER GROUND BAR.
15. APPROVED ANTIOXIDANT COATINGS (i.e. CONDUCTIVE GEL OR PASTE) SHALL BE USED ON ALL COMPRESSION AND BOLTED GROUND CONNECTIONS.
16. ALL EXTERIOR GROUND CONNECTIONS SHALL BE COATED WITH A CORROSION RESISTANT MATERIAL.
17. MISCELLANEOUS ELECTRICAL AND NON–ELECTRICAL METAL BOXES, FRAMES AND SUPPORTS SHALL BE BONDED TO THE GROUND RING, IN ACCORDANCE WITH THE NEC.
18. BOND ALL METALLIC OBJECTS WITHIN 6 ft OF MAIN GROUND RING WITH (1) #2 BARE SOLID TINNED COPPER GROUND CONDUCTOR.
19. GROUND CONDUCTORS USED FOR THE FACILITY GROUNDING AND LIGHTNING PROTECTION SYSTEMS SHALL NOT BE ROUTED THROUGH METALLIC OBJECTS THAT FORM A RING AROUND THE CONDUCTOR, SUCH AS METALLIC CONDUITS, METAL SUPPORT CLIPS OR SLEEVES THROUGH WALLS OR FLOORS. WHEN IT IS REQUIRED TO BE HOUSED IN CONDUIT TO MEET CODE REQUIREMENTS OR LOCAL CONDITIONS, NON–METALLIC MATERIAL SUCH AS PVC CONDUIT SHALL BE USED. WHERE USE OF METAL CONDUIT IS UNAVOIDABLE (i.e., NONMETALLIC CONDUIT PROHIBITED BY LOCAL CODE) THE GROUND CONDUCTOR SHALL BE BONDED TO EACH END OF THE METAL CONDUIT.
20. ALL GROUNDS THAT TRANSITION FROM BELOW GRADE TO ABOVE GRADE MUST BE #2 BARE SOLID TINNED COPPER IN 3/4" NON–METALLIC, FLEXIBLE CONDUIT FROM 24" BELOW GRADE TO WITHIN 3" TO 6" OF CAD–WELD TERMINATION POINT. THE EXPOSED END OF THE CONDUIT MUST BE SEALED WITH SILICONE CAULK. (ADD TRANSITIONING GROUND STANDARD DETAIL AS WELL).
21. BUILDINGS WHERE THE MAIN GROUNDING CONDUCTORS ARE REQUIRED TO BE ROUTED TO GRADE, THE CONTRACTOR SHALL ROUTE TWO GROUNDING CONDUCTORS FROM THE ROOFTOP, TOWERS, AND WATER TOWERS GROUNDING RING, TO THE EXISTING GROUNDING SYSTEM, THE GROUNDING CONDUCTORS SHALL NOT BE SMALLER THAN 2/0 COPPER. ROOFTOP GROUNDING RING SHALL BE BONDED TO THE EXISTING GROUNDING SYSTEM, THE BUILDING STEEL COLUMNS, LIGHTNING PROTECTION SYSTEM, AND BUILDING MAIN WATER LINE (FERROUS OR NONFERROUS METAL PIPING ONLY).

T-Mobile
2323 DELGANY STREET
DENVER, CO 80216

CROWN CASTLE
200 SPECTRUM CENTER DRIVE,
SUITE 1700 & 1800
IRVINE, CA 92618

TOWER ENGINEERING PROFESSIONALS
4710 E ELWOOD ST, STE 9
PHOENIX, AZ 85040
OFFICE: (480) 285-0036
www.tepgroup.net

T-MOBILE
SITE NUMBER: **DN06123A**
(SPRINT RETAIN)

BU #: **877092**
F3/FILL-IN/COLORADO SPGS/CSP18

255 NORTH GATE BLVD
COLORADO SPRINGS, CO
80921

EXISTING 69'-7"
SELF SUPPORT

ISSUED FOR:

REV	DATE	DRWN	DESCRIPTION	DES./QA
0	05/05/21	VBP	CONSTRUCTION	JFJ
1	05/24/21	JLB	CONSTRUCTION	JFJ
2	06/21/21	AOW	CONSTRUCTION	JFJ
3	09/16/21	GVM	CONSTRUCTION	JFJ
4	04/14/22	PSS	CONSTRUCTION	JFJ

COLORADO LICENSED PROFESSIONAL ENGINEER ANDREW RAGNAR BERGLUND 58272

04/14/22

Andrew R. Berglund, P.E.
Professional Engineer License: #58272

IT IS A VIOLATION OF LAW FOR ANY PERSON, UNLESS THEY ARE ACTING UNDER THE DIRECTION OF A LICENSED PROFESSIONAL ENGINEER, TO ALTER THIS DOCUMENT.

SITE PLAN DISCLAIMER:

PROPERTY LINES AND STRUCTURES HAVE BEEN DIGITIZED FROM PREVIOUS PLAN SETS. TOWER ENGINEERING PROFESSIONALS HAS NOT COMPLETED A SITE SURVEY AND THEREFORE MAKES NO CLAIMS AS TO THE ACCURACY OF INFORMATION DEPICTED ON THIS SHEET.

1 OVERALL SITE PLAN

SCALE: 50' 25' 0 50' 1" = 50'-0" (FULL SIZE) 1" = 100'-0" (11x17)

N

T-Mobile

2323 DELGANY STREET
DENVER, CO 80216

CROWN CASTLE

200 SPECTRUM CENTER DRIVE,
SUITE 1700 & 1800
IRVINE, CA 92618

TOWER ENGINEERING PROFESSIONALS
4710 E. ELWOOD ST, STE 9
PHOENIX, AZ 85040
OFFICE: (480) 285-0036
www.tepgroup.net

T-MOBILE
SITE NUMBER: **DN06123A**
(SPRINT RETAIN)

BU #: **877092**
F3/FILL-IN/COLORADO SPGS/CSP18

255 NORTH GATE BLVD
COLORADO SPRINGS, CO
80921

EXISTING 69'-7"
SELF SUPPORT

ISSUED FOR:

REV	DATE	DRWN	DESCRIPTION	DES./QA
0	05/05/21	VBP	CONSTRUCTION	JFJ
1	05/24/21	JLB	CONSTRUCTION	JFJ
2	06/21/21	AOW	CONSTRUCTION	JFJ
3	09/16/21	GVM	CONSTRUCTION	JFJ
4	04/14/22	PSS	CONSTRUCTION	JFJ

COLORADO LICENSED PROFESSIONAL ENGINEER ANDREW R. BERGLUND 58272

04/14/22

Andrew R. Berglund, P.E.
Professional Engineer License: #58272

IT IS A VIOLATION OF LAW FOR ANY PERSON, UNLESS THEY ARE ACTING UNDER THE DIRECTION OF A LICENSED PROFESSIONAL ENGINEER, TO ALTER THIS DOCUMENT.

SHEET NUMBER: C-1.1

REVISION: 4

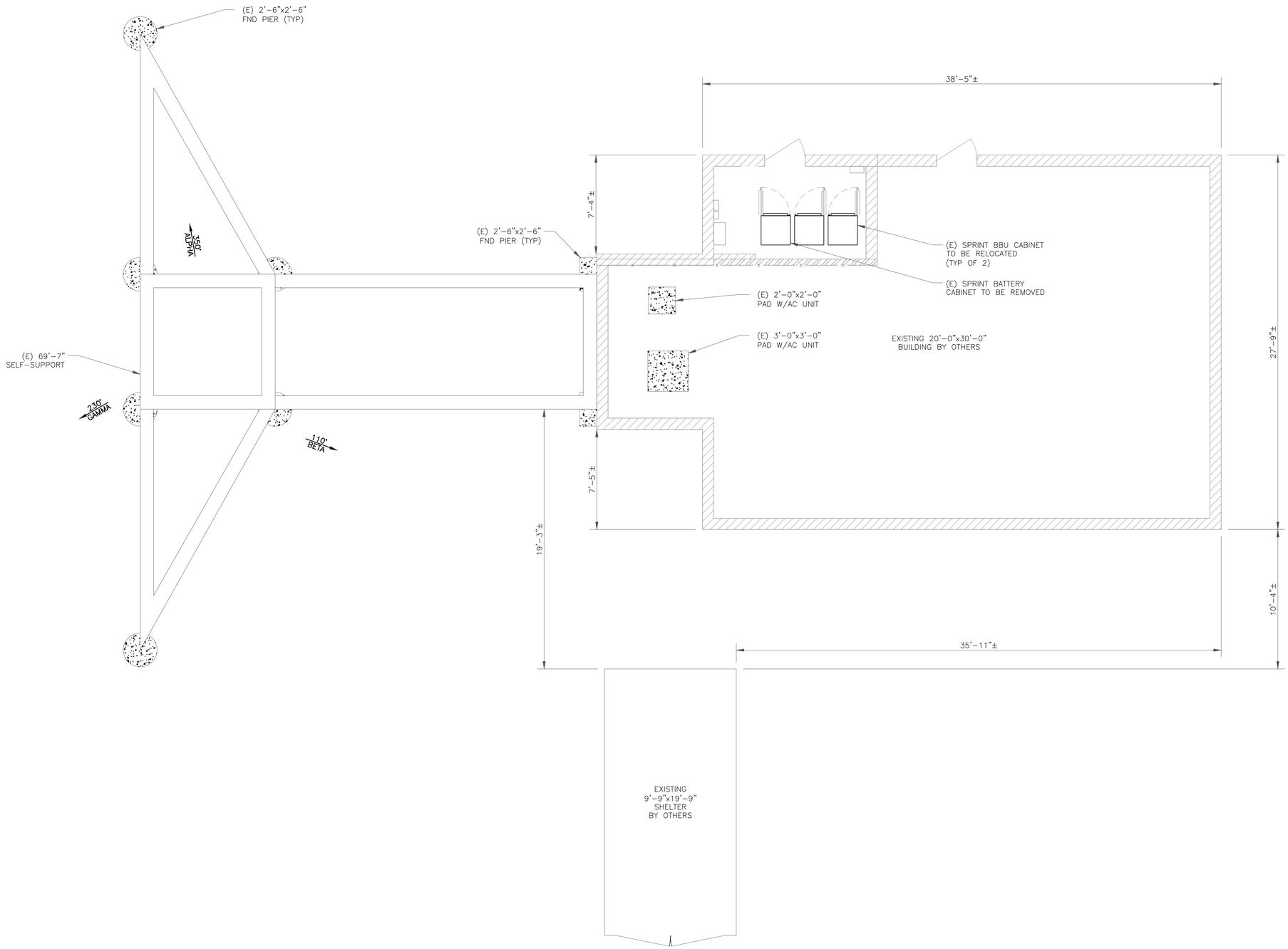

1 EXISTING EQUIPMENT LAYOUT

SCALE: 4' 3' 2' 1' 0 4' 1/4"=1'-0" (FULL SIZE) 1/8"=1'-0" (11x17)

N

T-Mobile

2323 DELGANY STREET
DENVER, CO 80216

CROWN CASTLE

200 SPECTRUM CENTER DRIVE,
SUITE 1700 & 1800
IRVINE, CA 92618

TOWER ENGINEERING PROFESSIONALS
4710 E ELWOOD ST, STE 9
PHOENIX, AZ 85040
OFFICE: (480) 285-0036
www.tepgroup.net

T-MOBILE
SITE NUMBER: **DN06123A**
(SPRINT RETAIN)

BU #: **877092**
F3/FILL-IN/COLORADO SPGS/CSP18

255 NORTH GATE BLVD
COLORADO SPRINGS, CO
80921

EXISTING 69'-7"
SELF SUPPORT

ISSUED FOR:

REV	DATE	DRWN	DESCRIPTION	DES./QA
0	05/05/21	VBP	CONSTRUCTION	JFJ
1	05/24/21	JLB	CONSTRUCTION	JFJ
2	06/21/21	AOW	CONSTRUCTION	JFJ
3	09/16/21	GVM	CONSTRUCTION	JFJ
4	04/14/22	PSS	CONSTRUCTION	JFJ

ANDREW R. BERGLUND
58272
COLORADO
PROFESSIONAL ENGINEER

04/14/22

Andrew R. Berglund, P.E.
Professional Engineer License: #58272

IT IS A VIOLATION OF LAW FOR ANY PERSON, UNLESS THEY ARE ACTING UNDER THE DIRECTION OF A LICENSED PROFESSIONAL ENGINEER, TO ALTER THIS DOCUMENT.

SHEET NUMBER: C-1.2

REVISION: 4

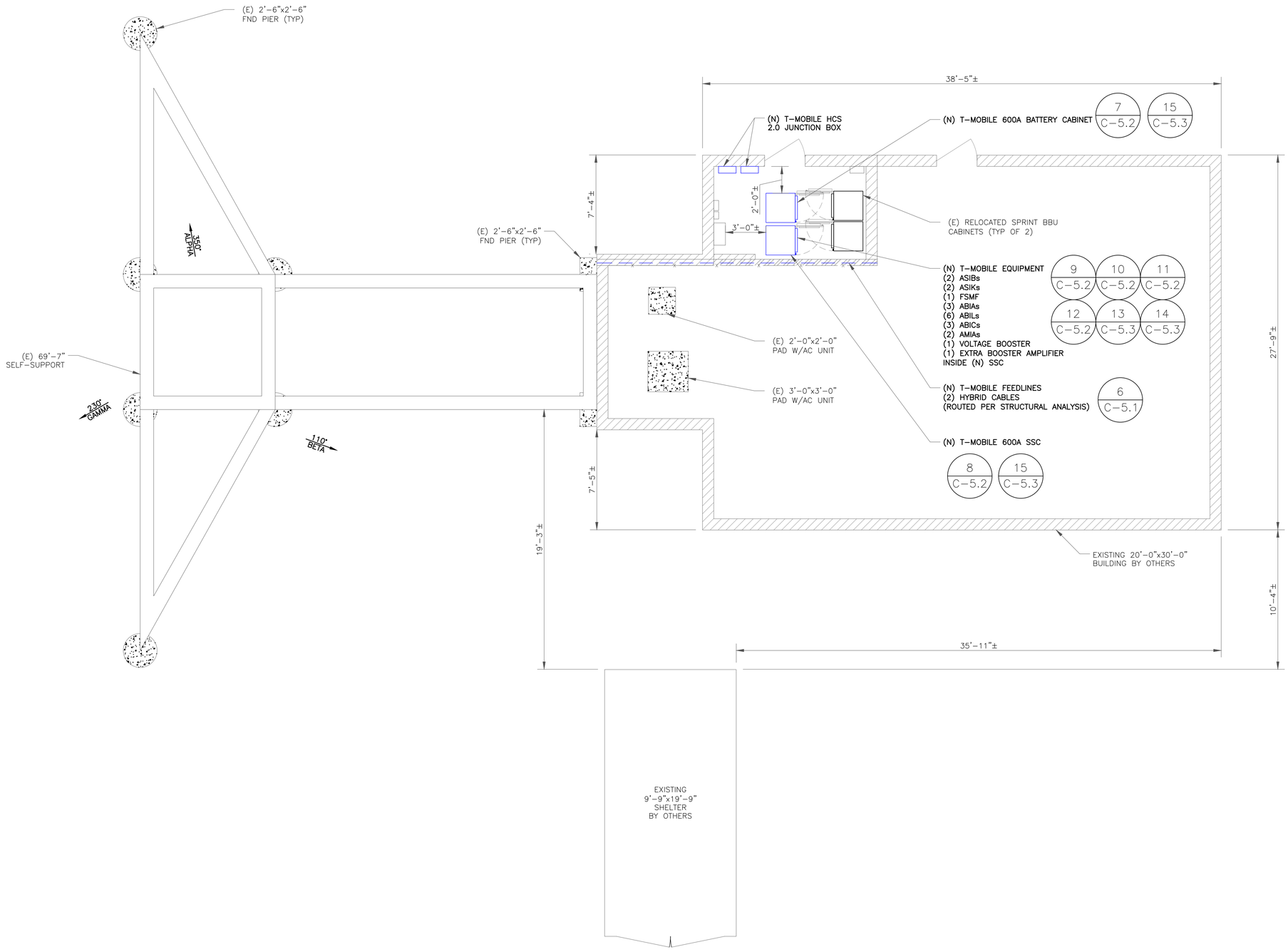

1 NEW EQUIPMENT LAYOUT

SCALE: 4' 3' 2' 1' 0 4'
1/4"=1'-0" (FULL SIZE)
1/8"=1'-0" (11x17)

N

T-Mobile

2323 DELGANY STREET
DENVER, CO 80216

CROWN CASTLE

200 SPECTRUM CENTER DRIVE,
SUITE 1700 & 1800
IRVINE, CA 92618

TOWER ENGINEERING PROFESSIONALS
4710 E ELWOOD ST, STE 9
PHOENIX, AZ 85040
OFFICE: (480) 285-0036
www.tepgroup.net

T-MOBILE
SITE NUMBER: **DN06123A**
(SPRINT RETAIN)

BU #: **877092**
F3/FILL-IN/COLORADO SPGS/CSP18

255 NORTH GATE BLVD
COLORADO SPRINGS, CO
80921

EXISTING 69'-7"
SELF SUPPORT

ISSUED FOR:

REV	DATE	DRWN	DESCRIPTION	DES./QA
0	05/05/21	VBP	CONSTRUCTION	JFJ
1	05/24/21	JLB	CONSTRUCTION	JFJ
2	06/21/21	AOW	CONSTRUCTION	JFJ
3	09/16/21	GVM	CONSTRUCTION	JFJ
4	04/14/22	PSS	CONSTRUCTION	JFJ

ANDREW R. BERGLUND
58272
COLORADO
PROFESSIONAL ENGINEER

04/14/22

Andrew R. Berglund, P.E.
Professional Engineer License: #58272

IT IS A VIOLATION OF LAW FOR ANY PERSON, UNLESS THEY ARE ACTING UNDER THE DIRECTION OF A LICENSED PROFESSIONAL ENGINEER, TO ALTER THIS DOCUMENT.

SHEET NUMBER: C-1.3

REVISION: 4

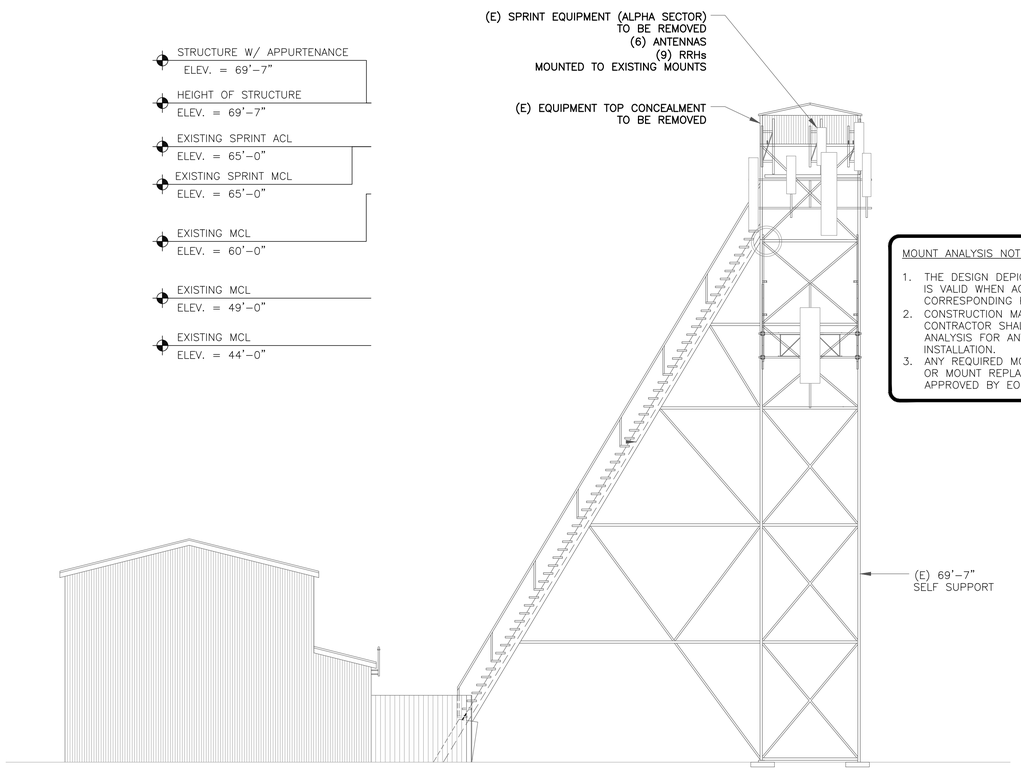

MOUNT ANALYSIS NOTES:

1. THE DESIGN DEPICTED IN THESE DRAWINGS IS VALID WHEN ACCOMPANIED BY A CORRESPONDING PASSING MOUNT ANALYSIS.
2. CONSTRUCTION MANAGER / GENERAL CONTRACTOR SHALL REVIEW THE MOUNT ANALYSIS FOR ANY CONDITIONS PRIOR TO INSTALLATION.
3. ANY REQUIRED MOUNT MODIFICATION DESIGN OR MOUNT REPLACEMENT SHALL BE APPROVED BY EOR.

1 EXISTING NORTH ELEVATION

SCALE: 8' 6' 4' 2' 0 8' 1/8"=1'-0" (FULL SIZE) 1/16"=1'-0" (11x17)

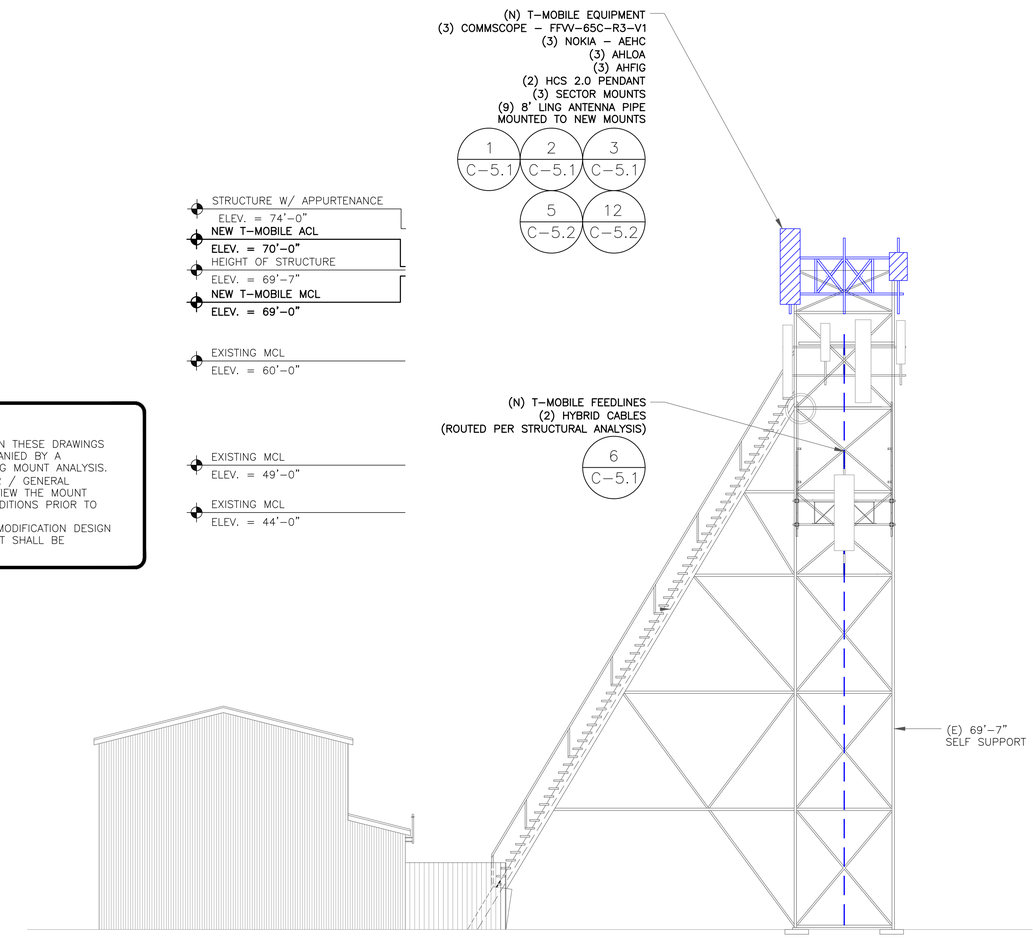

2 NEW NORTH ELEVATION

SCALE: 8' 6' 4' 2' 0 8' 1/8"=1'-0" (FULL SIZE) 1/16"=1'-0" (11x17)

T-Mobile

2323 DELGANY STREET
DENVER, CO 80216

CROWN CASTLE

200 SPECTRUM CENTER DRIVE,
SUITE 1700 & 1800
IRVINE, CA 92618

TOWER ENGINEERING PROFESSIONALS
4710 E ELWOOD ST, STE 9
PHOENIX, AZ 85040
OFFICE: (480) 285-0036
www.tepgroup.net

T-MOBILE
SITE NUMBER: **DN06123A**
(SPRINT RETAIN)

BU #: **877092**
F3/FILL-IN/COLORADO SPGS/CSP18

255 NORTH GATE BLVD
COLORADO SPRINGS, CO
80921

EXISTING 69'-7"
SELF SUPPORT

ISSUED FOR:

REV	DATE	DRWN	DESCRIPTION	DES./QA
0	05/05/21	VBP	CONSTRUCTION	JFJ
1	05/24/21	JLB	CONSTRUCTION	JFJ
2	06/21/21	AOW	CONSTRUCTION	JFJ
3	09/16/21	GVM	CONSTRUCTION	JFJ
4	04/14/22	PSS	CONSTRUCTION	JFJ

04/14/22

Andrew R. Berglund, P.E.
Professional Engineer License: #58272

IT IS A VIOLATION OF LAW FOR ANY PERSON, UNLESS THEY ARE ACTING UNDER THE DIRECTION OF A LICENSED PROFESSIONAL ENGINEER, TO ALTER THIS DOCUMENT.

SHEET NUMBER: C-2

REVISION: 4

NOTES:

1. REFERENCE C-4 FOR FINAL EQUIPMENT SCHEDULE.
2. REFERENCE C-5.1, C-5.2 AND C-5.3 FOR NEW EQUIPMENT SPECIFICATIONS.
3. CONTRACTOR TO VERIFY ALL ANTENNA TIP HEIGHTS DO NOT EXCEED BEACON BASE HEIGHT.
4. NEW EQUIPMENT TO BE PAINTED WITH RF TRANSPARENT, UV RESISTANT, OUTDOOR RATED PAINT TO MATCH EXISTING.

MOUNT ANALYSIS NOTES:

1. THE DESIGN DEPICTED IN THESE DRAWINGS IS VALID WHEN ACCOMPANIED BY A CORRESPONDING PASSING MOUNT ANALYSIS.
2. CONSTRUCTION MANAGER / GENERAL CONTRACTOR SHALL REVIEW THE MOUNT ANALYSIS FOR ANY CONDITIONS PRIOR TO INSTALLATION.
3. ANY REQUIRED MOUNT MODIFICATION DESIGN OR MOUNT REPLACEMENT SHALL BE APPROVED BY EOR.

"LOOK UP" – CROWN CASTLE USA INC. SAFETY CLIMB REQUIREMENT:

THE INTEGRITY OF THE SAFETY CLIMB AND ALL COMPONENTS OF THE CLIMBING FACILITY SHALL BE CONSIDERED DURING ALL STAGES OF DESIGN, INSTALLATION, AND INSPECTION. TOWER MODIFICATION, MOUNT REINFORCEMENTS, AND/OR EQUIPMENT INSTALLATIONS SHALL NOT COMPROMISE THE INTEGRITY OR FUNCTIONAL USE OF THE SAFETY CLIMB OR ANY COMPONENTS OF THE CLIMBING FACILITY ON THE STRUCTURE. THIS SHALL INCLUDE, BUT NOT BE LIMITED TO: PINCHING OF THE WIRE ROPE, BENDING OF THE WIRE ROPE FROM ITS SUPPORTS, DIRECT CONTACT OR CLOSE PROXIMITY TO THE WIRE ROPE WHICH MAY CAUSE FRICTIONAL WEAR, IMPACT TO THE ANCHORAGE POINTS IN ANY WAY, OR TO IMPEDE/BLOCK ITS INTENDED USE. ANY COMPROMISED SAFETY CLIMB, INCLUDING EXISTING CONDITIONS MUST BE TAGGED OUT AND REPORTED TO YOUR CROWN CASTLE USA INC. POC OR CALL THE NOC TO GENERATE A SAFETY CLIMB MAINTENANCE AND CONTRACTOR NOTICE TICKET.

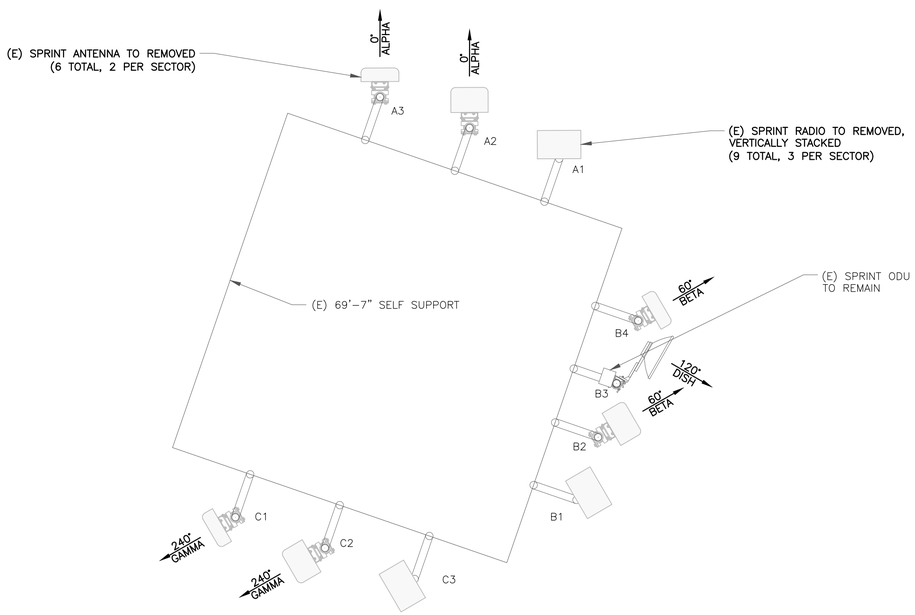

1 EXISTING ANTENNA PLAN

SCALE: 2' 1' 0 2' 1/2"=1'-0" (FULL SIZE) 1/4"=1'-0" (11x17)

N

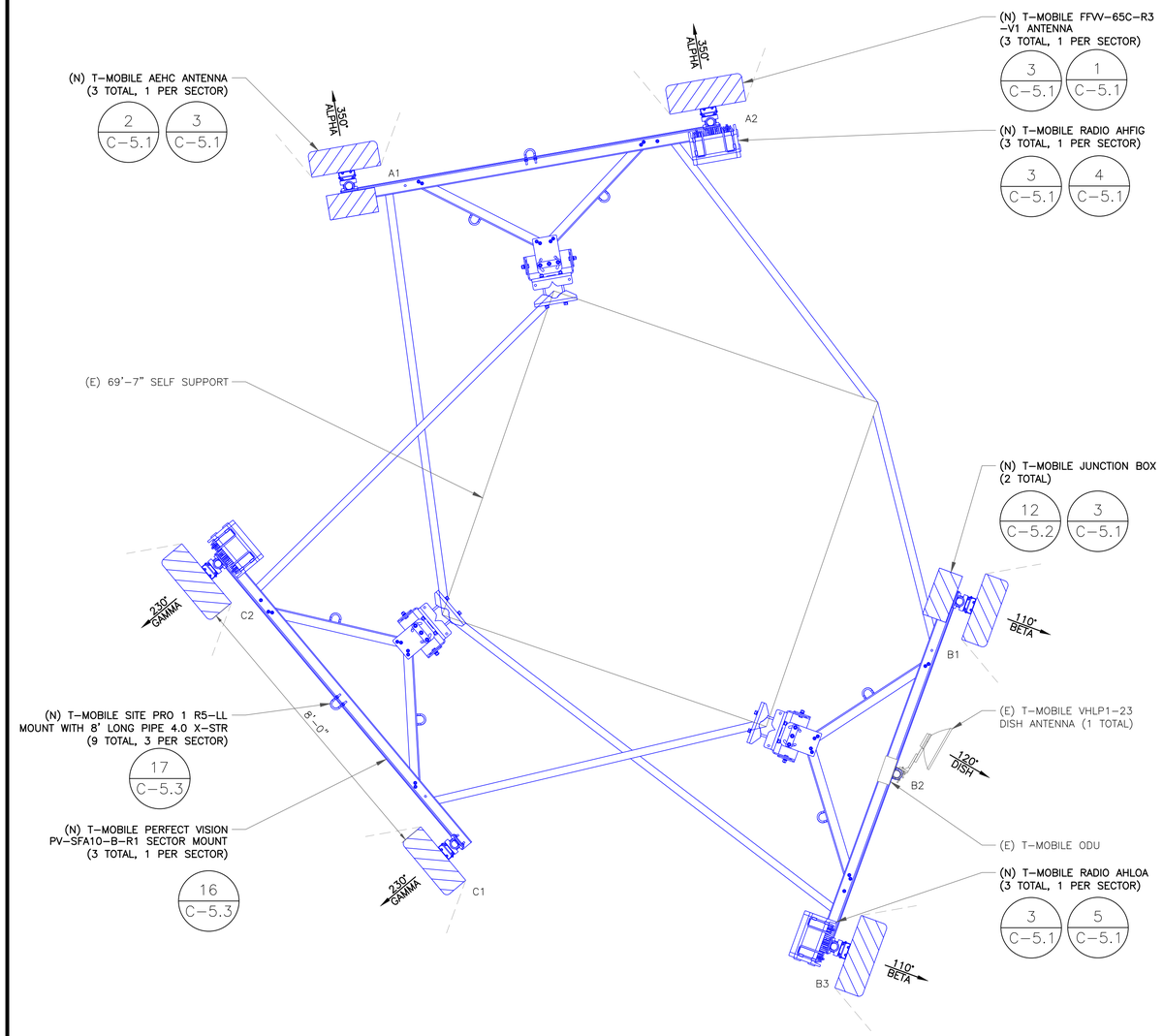

2 NEW ANTENNA PLAN

SCALE: 2' 1' 0 2' 1/2"=1'-0" (FULL SIZE) 1/4"=1'-0" (11x17)

N

T-Mobile

2323 DELGANY STREET
DENVER, CO 80216

CROWN CASTLE

200 SPECTRUM CENTER DRIVE,
SUITE 1700 & 1800
IRVINE, CA 92618

TOWER ENGINEERING PROFESSIONALS
4710 E ELWOOD ST, STE 9
PHOENIX, AZ 85040
OFFICE: (480) 285-0036
www.tepgroup.net

T-MOBILE
SITE NUMBER: **DN06123A**
(SPRINT RETAIN)

BU #: **877092**
F3/FILL-IN/COLORADO SPGS/CSP18

255 NORTH GATE BLVD
COLORADO SPRINGS, CO
80921

EXISTING 69'-7"
SELF SUPPORT

ISSUED FOR:

REV	DATE	DRWN	DESCRIPTION	DES./QA
0	05/05/21	VBP	CONSTRUCTION	JFJ
1	05/24/21	JLB	CONSTRUCTION	JFJ
2	06/21/21	AOW	CONSTRUCTION	JFJ
3	09/16/21	GVM	CONSTRUCTION	JFJ
4	04/14/22	PSS	CONSTRUCTION	JFJ

ANDREW R. BERGLUND
58272
COLORADO
PROFESSIONAL ENGINEER

04/14/22

Andrew R. Berglund, P.E.
Professional Engineer License: #58272

IT IS A VIOLATION OF LAW FOR ANY PERSON, UNLESS THEY ARE ACTING UNDER THE DIRECTION OF A LICENSED PROFESSIONAL ENGINEER, TO ALTER THIS DOCUMENT.

SHEET NUMBER: C-3

REVISION: 4

FINAL EQUIPMENT SCHEDULE
(VERIFY WITH CURRENT RFDS)

POSITION	ANTENNA				RADIO			DIPLEXER			TMA		SURGE PROTECTION		CABLES			
	TECH.	STATUS/MANUFACTURER MODEL	AZIMUTH	RAD CENTER	QTY.	STATUS/MODEL	LOCATION	QTY.	STATUS	LOCATION	QTY.	STATUS	QTY.	STATUS/MODEL	QTY.	STATUS/TYPE	SIZE	LENGTH
ALPHA																		
A1	L700 N600 N600 L2100 L1900 G1900 N2100 N1900	(N) NOKIA AEHC	350°	70'-0"	–	–	–	–	–	–	–	–	–	–	–	–	–	–
A2	L2500 N2500	(N) COMMSCOPE FFVV-65C-R3-V1_	350°	70'-0"	1 1	(N) NOKIA AHFIG (N) NOKIA AHLOA	TOWER TOWER	–	–	–	–	–	1	(N) HCS 2.0 PART 1	1	(N) HYBRID	1-1/2"	115'-0"
BETA																		
B1	L700 N600 N600 L2100 L1900 G1900 N2100 N1900	(N) NOKIA AEHC	110°	70'-0"	–	–	–	–	–	–	–	–	–	–	–	–	–	–
B2	–	(E) ANDREW VHLP1-23	120°	70'-0"	1	(E) DRAGONWAVE HORIZON COMPACT PLUS	TOWER	–	–	–	–	–	–	–	1	(E) COAX	1/2"	115'-0"
B3	L2500 N2500	(N) COMMSCOPE FFVV-65C-R3-V1_	110°	70'-0"	1 1	(N) NOKIA AHFIG (N) NOKIA AHLOA	TOWER TOWER	–	–	–	–	–	1	(N) HCS 2.0 PART 1	1	(N) HYBRID	1-1/2"	115'-0"
GAMMA																		
C1	L700 N600 N600 L2100 L1900 G1900 N2100 N1900	(N) NOKIA AEHC	230°	70'-0"	–	–	–	–	–	–	–	–	–	–	–	–	–	–
C2	L2500 N2500	(N) COMMSCOPE FFVV-65C-R3-V1_	230°	70'-0"	1 1	(N) NOKIA AHFIG (N) NOKIA AHLOA	TOWER TOWER	–	–	–	–	–	–	–	–	–	–	–
															0	(E) UNUSED	–	–

NOTE:
(E) – EXISTING
(N) – NEW

1 FINAL EQUIPMENT SCHEDULE
SCALE: NOT TO SCALE

T-Mobile
2323 DELGANY STREET
DENVER, CO 80216

CROWN CASTLE
200 SPECTRUM CENTER DRIVE,
SUITE 1700 & 1800
IRVINE, CA 92618

TOWER ENGINEERING PROFESSIONALS
4710 E ELWOOD ST, STE 9
PHOENIX, AZ 85040
OFFICE: (480) 285-0036
www.tepgroup.net

T-MOBILE
SITE NUMBER: **DN06123A**
(SPRINT RETAIN)

BU #: **877092**
F3/FILL-IN/COLORADO SPGS/CSP18

255 NORTH GATE BLVD
COLORADO SPRINGS, CO
80921

EXISTING 69'-7"
SELF SUPPORT

ISSUED FOR:

REV	DATE	DRWN	DESCRIPTION	DES./QA
0	05/05/21	VBP	CONSTRUCTION	JFJ
1	05/24/21	JLB	CONSTRUCTION	JFJ
2	06/21/21	AOW	CONSTRUCTION	JFJ
3	09/16/21	GVM	CONSTRUCTION	JFJ
4	04/14/22	PSS	CONSTRUCTION	JFJ

04/14/22

Andrew R. Berglund, P.E.
Professional Engineer License: #58272

IT IS A VIOLATION OF LAW FOR ANY PERSON, UNLESS THEY ARE ACTING UNDER THE DIRECTION OF A LICENSED PROFESSIONAL ENGINEER, TO ALTER THIS DOCUMENT.

SHEET NUMBER: C-4

REVISION: 4

COMMSCOPE - FFVV-65C-R3- V1

ANTENNA MAKE:	COMMSCOPE
ANTENNA MODEL:	FFVV-65C-R3-V1
DIMENSIONS, HxWxD:	95.90"x25.20"x9.30"
WEIGHT:	124.60 lbs

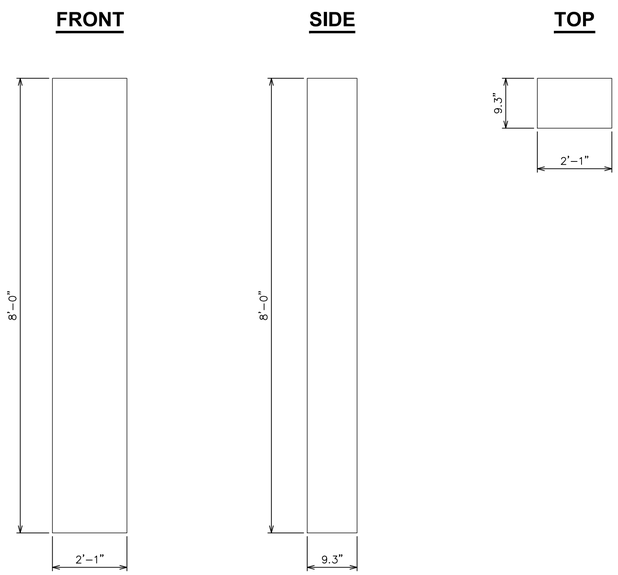

1 PROPOSED COMMSCOPE ANTENNA DETAIL
SCALE: NOT TO SCALE

NOKIA / AEHC

ANTENNA MAKE:	NOKIA
ANTENNA MODEL:	AEHC
DIMENSIONS, HxWxD:	35.43"x22.83"x8.26"
WEIGHT:	99.20 lbs

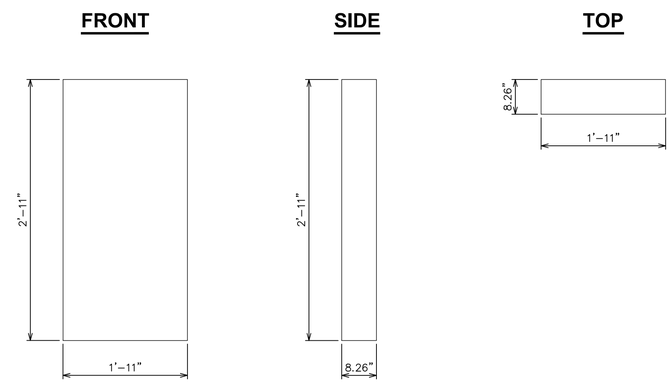

2 PROPOSED NOKIA ANTENNA DETAIL
SCALE: NOT TO SCALE

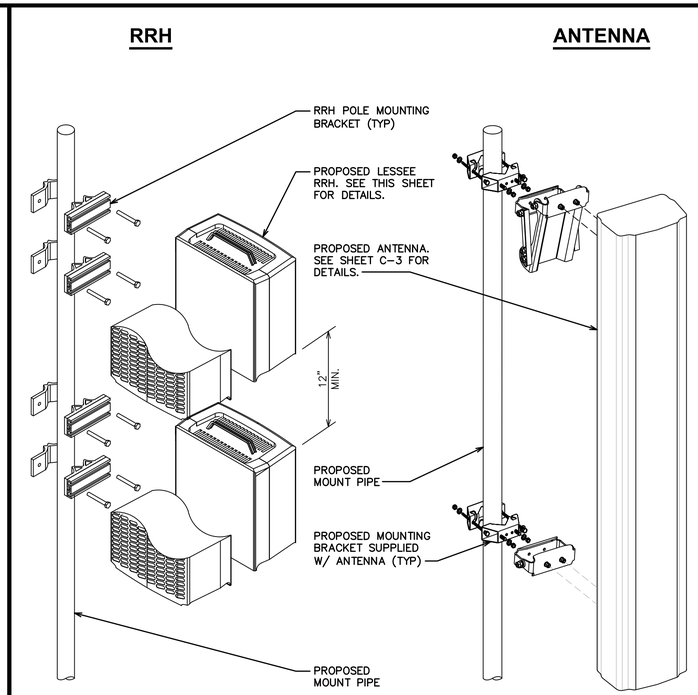

3 EQUIPMENT MOUNTING DETAIL
SCALE: NOT TO SCALE

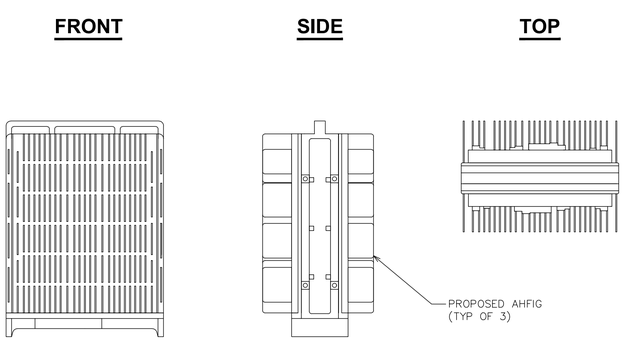

NOKIA AHFIG

NOKIA:	RADIO AHFIG
DIMENSIONS, HxWxD:	27.60"x13.40"x5.60"
WEIGHT:	79.40 LBS

4 NOKIA AHFIG
SCALE: NOT TO SCALE

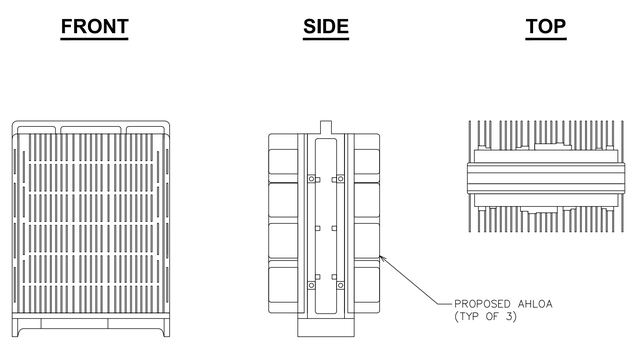

NOKIA AHLOA

NOKIA:	RADIO AHLOA
DIMENSIONS, HxWxD:	26.60"x12.90"x8.10"
WEIGHT:	83.80 LBS

5 NOKIA AHLOA
SCALE: NOT TO SCALE

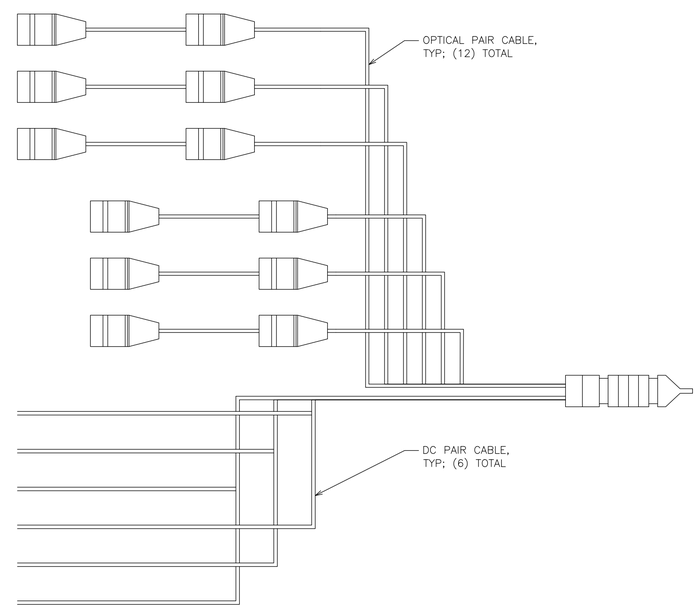

NOKIA – HCS 2.0
WEIGHT: 1.7 LBS/FT
DIAMETER: 1.5" (±.1")
COAX EQUIVALENT: 1⅜"

6 HCS DETAIL
SCALE: NOT TO SCALE

T-Mobile
2323 DELGANY STREET
DENVER, CO 80216

CROWN CASTLE
200 SPECTRUM CENTER DRIVE,
SUITE 1700 & 1800
IRVINE, CA 92618

TOWER ENGINEERING PROFESSIONALS
4710 E ELWOOD ST, STE 9
PHOENIX, AZ 85040
OFFICE: (480) 285-0036
www.tepgroup.net

T-MOBILE
SITE NUMBER: **DN06123A**
(SPRINT RETAIN)

BU #: **877092**
F3/FILL-IN/COLORADO SPGS/CSP18

255 NORTH GATE BLVD
COLORADO SPRINGS, CO
80921

EXISTING 69'-7"
SELF SUPPORT

ISSUED FOR:

REV	DATE	DRWN	DESCRIPTION	DES./QA
0	05/05/21	VBP	CONSTRUCTION	JFJ
1	05/24/21	JLB	CONSTRUCTION	JFJ
2	06/21/21	AOW	CONSTRUCTION	JFJ
3	09/16/21	GVM	CONSTRUCTION	JFJ
4	04/14/22	PSS	CONSTRUCTION	JFJ

04/14/22

Andrew R. Berglund, P.E.
Professional Engineer License: #58272

IT IS A VIOLATION OF LAW FOR ANY PERSON, UNLESS THEY ARE ACTING UNDER THE DIRECTION OF A LICENSED PROFESSIONAL ENGINEER, TO ALTER THIS DOCUMENT.

SHEET NUMBER: C-5.1

REVISION: 4

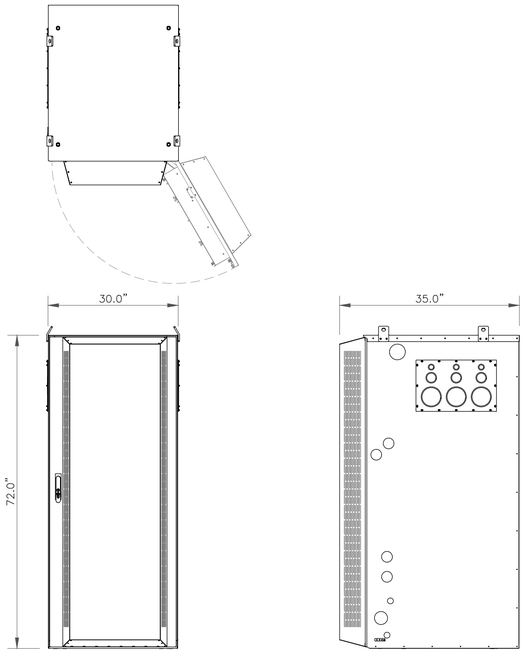

7 DELTA – HP LARGE 3 POWER CABINET
SCALE: NOT TO SCALE

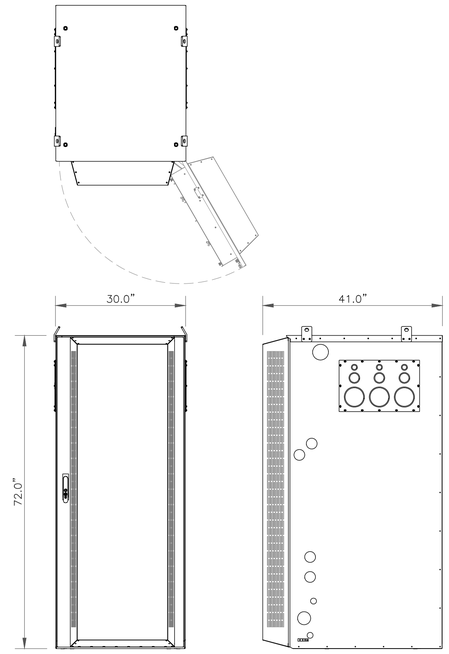

8 DELTA – LB3 BATTERY CABINET
SCALE: NOT TO SCALE

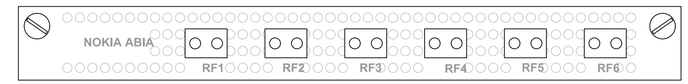

9 ABIA DETAIL
SCALE: NOT TO SCALE

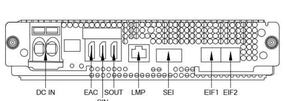

SIGNAL	#OF INTERFACES	CONNECTOR	DESCRIPTION
DC IN	1	DC TERMINAL	48V DC INPUT
EAC	1	HDMI	EXTERNAL ALARM & CONTROL, 6 ALARMS, 6 ALARMS/CTRLS
SIN	1	HDMI	SYNCHRONIZATION INPUT, GNSS INTERFACE
SOUT	1	HDMI	SYNCHRONIZATION OUTPUT
LMP	1	RJ45	LOCAL MANAGEMENT PORT, 1G ETHERNET
EIF	2	SFP28	BACKHAUL/HIGHER LAYER FRONTHAUL INTERFACE, UP TO 25GE PER PORT, SUPPORT FOR SYNCE IEEE1588
SEI	1	QSFP+	SYSTEM EXTENSION INTERSFACE, 4 X 10GE
RESET	1		PLUG IN RESET
SERVICE	1		SERVICE BUTTON, RECOVERY RESET
LEDS	7		VISUAL INDICATION OF STATUS

10 ABIL DETAIL
SCALE: NOT TO SCALE

Figure: *AMIA AirScale Subrack (factory default)*

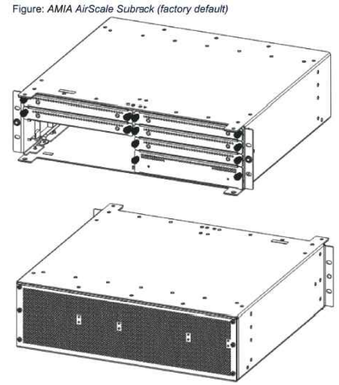

Table: *AMIA dimensions and weight*

Property	Value	Dimensions orientation
Height	128.5 mm (5.1 in.)	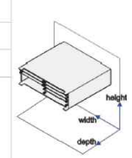
Depth	400 mm (15.7 in.)	
Width	447 mm (17.6 in.)	

11 AMIA DETAIL
SCALE: NOT TO SCALE

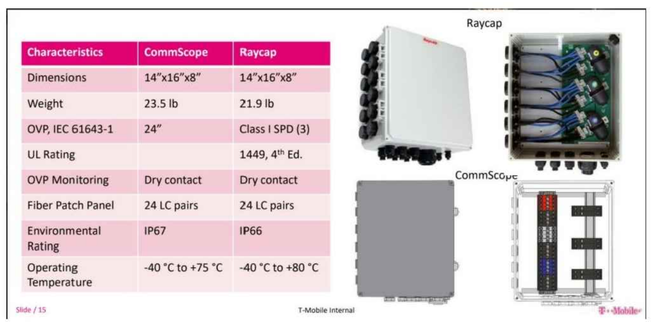

Characteristics	CommScope	Raycap
Dimensions	14"x16"x8"	14"x16"x8"
Weight	23.5 lb	21.9 lb
OVP, IEC 61643-1	24"	Class I SPD (3)
UL Rating		1449, 4th Ed.
OVP Monitoring	Dry contact	Dry contact
Fiber Patch Panel	24 LC pairs	24 LC pairs
Environmental Rating	IP67	IP66
Operating Temperature	-40 °C to +75 °C	-40 °C to +80 °C

COMMSCOPE HCS 2.0 PART 1

JUNCTION BOX MAKE: COMMSCOPE
JUNCTION BOX MODEL: HCS 2.0 PART 1
DIMENSIONS, HxWxD: 14.0"x16.0"x8.0"
WEIGHT: 23.50 LBS

12 COMMSCOPE/HCS 2.0 PART 1
SCALE: NOT TO SCALE

T-Mobile

2323 DELGANY STREET
DENVER, CO 80216

CROWN CASTLE

200 SPECTRUM CENTER DRIVE,
SUITE 1700 & 1800
IRVINE, CA 92618

TOWER ENGINEERING PROFESSIONALS
4710 E ELWOOD ST, STE 9
PHOENIX, AZ 85040
OFFICE: (480) 285-0036
www.tepgroup.net

T-MOBILE
SITE NUMBER: **DN06123A**
(SPRINT RETAIN)

BU #: **877092**
F3/FILL-IN/COLORADO SPGS/CSP18

255 NORTH GATE BLVD
COLORADO SPRINGS, CO
80921

EXISTING 69'-7"
SELF SUPPORT

ISSUED FOR:

REV	DATE	DRWN	DESCRIPTION	DES./QA
0	05/05/21	VBP	CONSTRUCTION	JFJ
1	05/24/21	JLB	CONSTRUCTION	JFJ
2	06/21/21	AOW	CONSTRUCTION	JFJ
3	09/16/21	GVM	CONSTRUCTION	JFJ
4	04/14/22	PSS	CONSTRUCTION	JFJ

04/14/22

Andrew R. Berglund, P.E.
Professional Engineer License: #58272

IT IS A VIOLATION OF LAW FOR ANY PERSON, UNLESS THEY ARE ACTING UNDER THE DIRECTION OF A LICENSED PROFESSIONAL ENGINEER, TO ALTER THIS DOCUMENT.

SHEET NUMBER: C-5.2
REVISION: 4

Flexi Multiradio BTS System Module FSMF

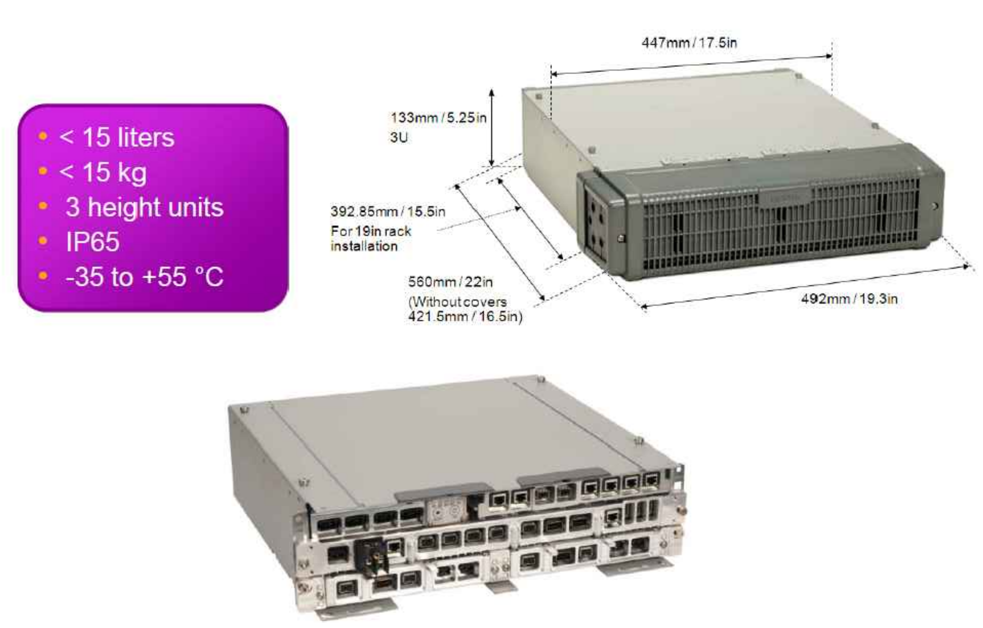

(13) FSMF DETAILS
SCALE: NOT TO SCALE

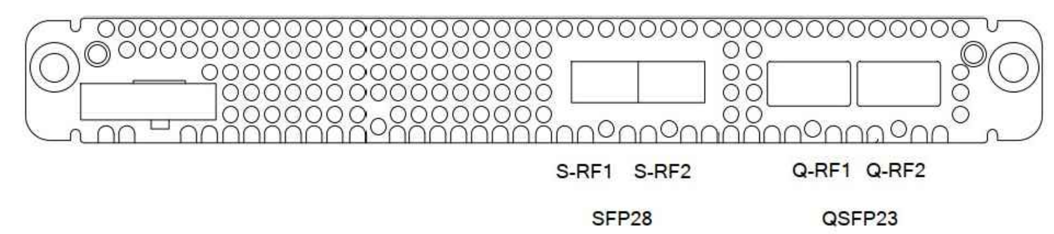

SIGNAL	#OF INTERFACES	CONNECTOR	DESCRIPTION
Q-RFN	2	QSFP28	4 X 25/10 GBPS PER EACH CONNECTOR, SUPPORTS 10GE AND 25 GE ETHERNET PROTOCOLS
S-RFN	2	SFP28	1 X 25/10 GBPS PER EACH CONNECTOR, SUPPORTS 10GE AND 25 GE ETHERNET PROTOCOLS
LEDS	5		VISUAL INDICATION OF STATUS

(14) ASIK DETAILS
SCALE: NOT TO SCALE

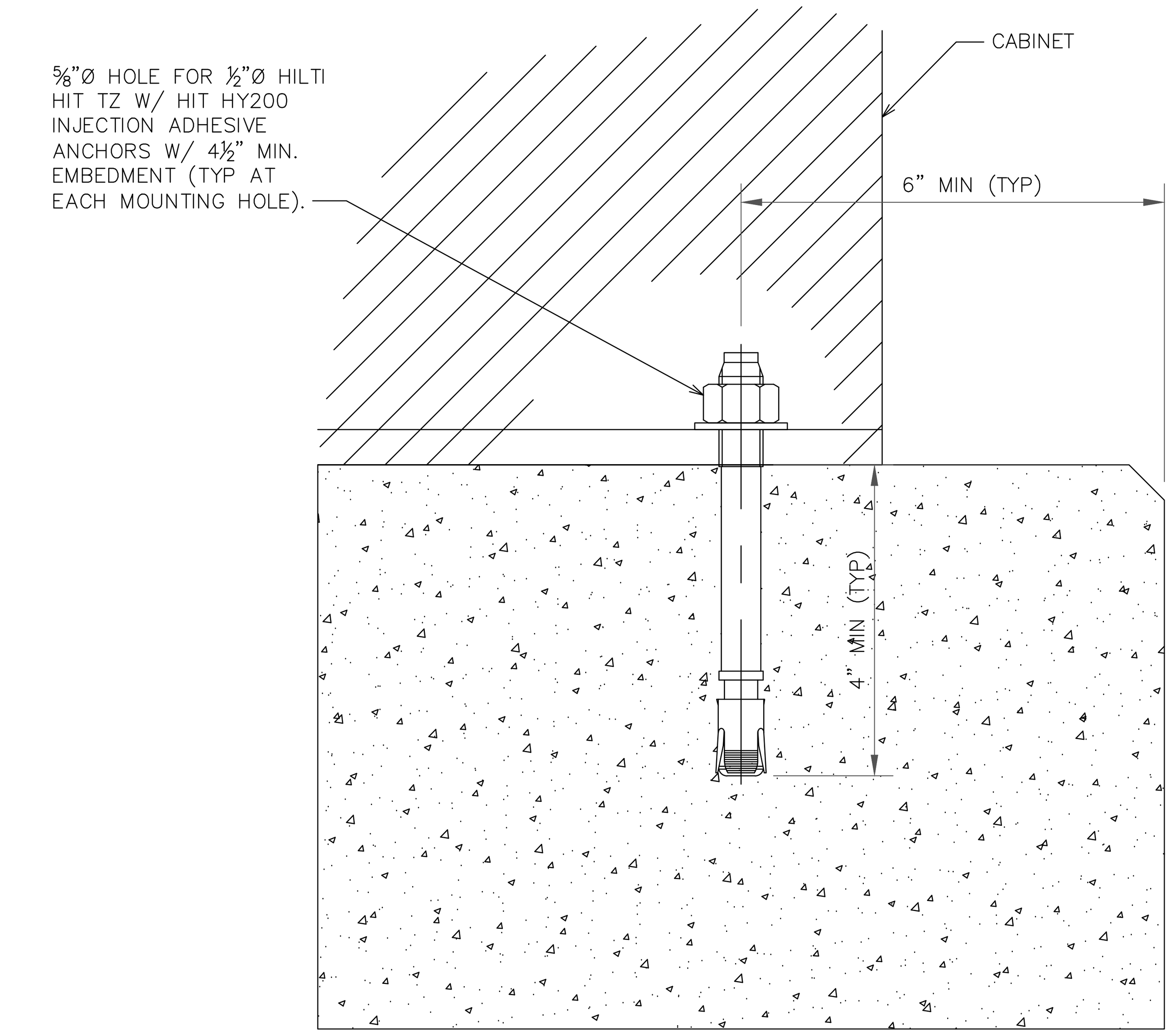

(15) CONNECTION DETAIL
SCALE: NOT TO SCALE

PV-SFA-B
L.I.F.E. MOUNT ASSEMBLED SECTOR FRAME

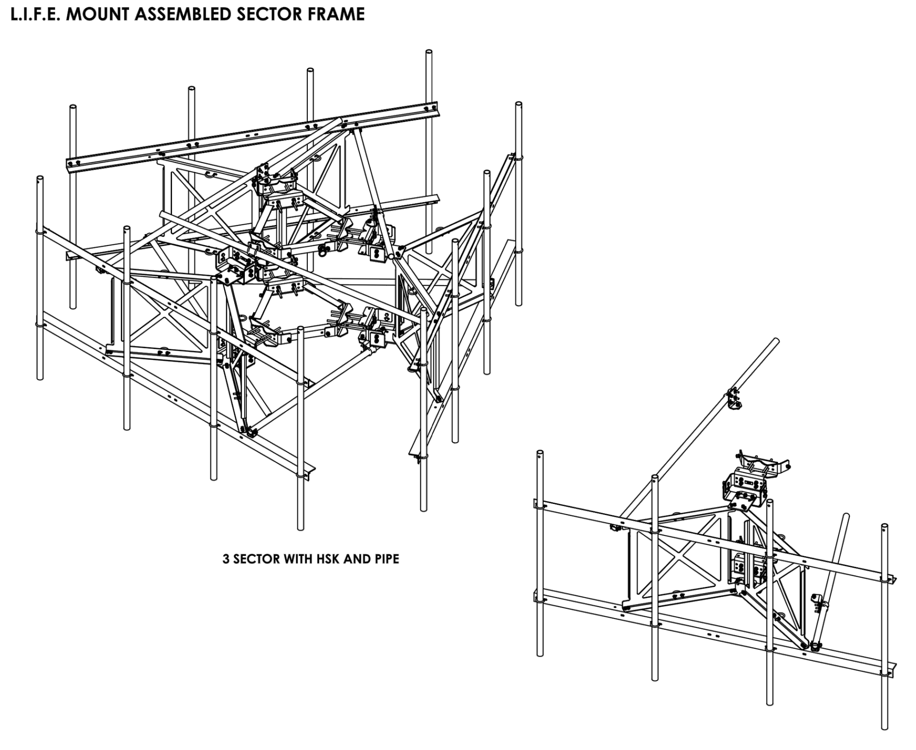

OPTIONAL ACCESSORIES

Table 1: Optional Accessories		
Part Number	Description	Sheet
PV-HSK	Horizontal Support Kit	7
PV-HSK-SK1	HSK - 4" Standoff Kit	7
PV-HSK-SK2	HSK - 2.25" Standoff Kit	7
PV-SFA-8016	Large Leg Adapter Kit	8
PV-SAM-U	Stiff Arm Leg Bracket	8
PV-SCRB-SFA	Safety Climb Cable Guide Attachment	6

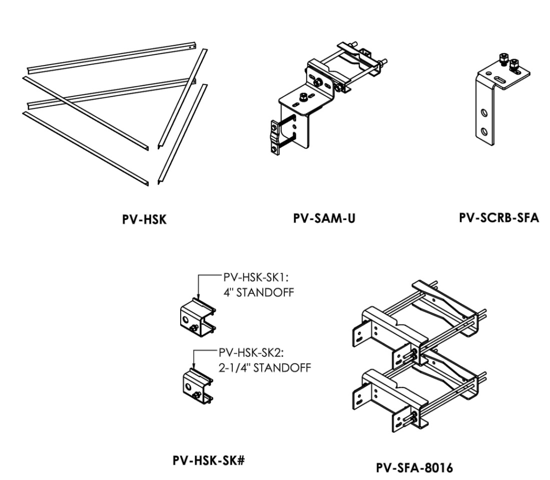

FALL-SAFE L.I.F.E. MOUNTS

SHEET 1 OF 10	THIRD ANGLE PROJECTION	CATEGORY 01_Self Support	10	ADDED 2-7/8" PIPE	4/9/21	PERFECT VISION
6/2/2021	SCALE NTS	SERIES 02_V-Frames - Assembled	9	UPDATED 5053	3/23/21	
DIMENSIONS ARE IN INCHES TOLERANCES U.N.O. HOLES: +1/16", -1/32" ANGULAR: PROFILE±1/4°, BEND±2° ALL OTHERS: ±1/16"		TYPE PV-SFA	8	ADDED HSK HK# KIT	2/22/19	L.I.F.E. MOUNT™ SECTOR FRAME
		BY DJN	7	UPDATED CLASSIFICATIONS, ADDED NOTES	3/20/18	DOCUMENT NUMBER SFA-ENG-01-R10
		CHECKED SJS	6	UPDATED CLASSIFICATIONS / TEMPLATE	8/30/17	REV 10
		STATUS APPROVED	REV	DESCRIPTION	DATE	

FRAME DETAILS:

Table 4: Frame (EPA)				
Frame Face Width	Front (EPA)$_{MAX}$ [ft^2]		Side (EPA)$_{MAX}$ [ft^2]	
	No Ice	0.5" Radial Ice	No Ice	0.5" Radial Ice
7'	9.9	11.3	5.2	7.4
10'6"	11.7	13.5	5.2	7.4
12'6"	13.0	15.1	5.2	7.4
14'6"	14.3	16.7	5.2	7.4

NOTE: FRAME EPA DOES NOT INCLUDE ANTENNA PIPES

Table 5: Tower Leg Compatibility		
Leg Type	Max Standard Bracket Size	Max Large Leg Bracket Size
Round	Ø8.625"	Ø16"
Angle 60°	6" x 6"	12" x 12"
Angle 90°	8" x 8"	16" x 16"
Lattice Leg	N/A	12" FW Leg

NOTE: SEE SHEET 7 FOR LARGE LEG BRACKET DETAILS

Table 6: Antenna Pipe Spacing			
Frame Face	3 Pipe Spacing	4 Pipe Spacing	5 Pipe Spacing
7'	3'6"	2'4"	N/A
10'6"	5'	3'4"	N/A
12'6"	6'	4'	N/A
14'6"	7'	4'8"	3'6"

COMPATIBLE ANTENNA PIPE:
- Ø2-3/8"
- Ø2-7/8"
- Ø3-1/2"

U-BOLTS SUPPLIED FOR Ø2-3/8"

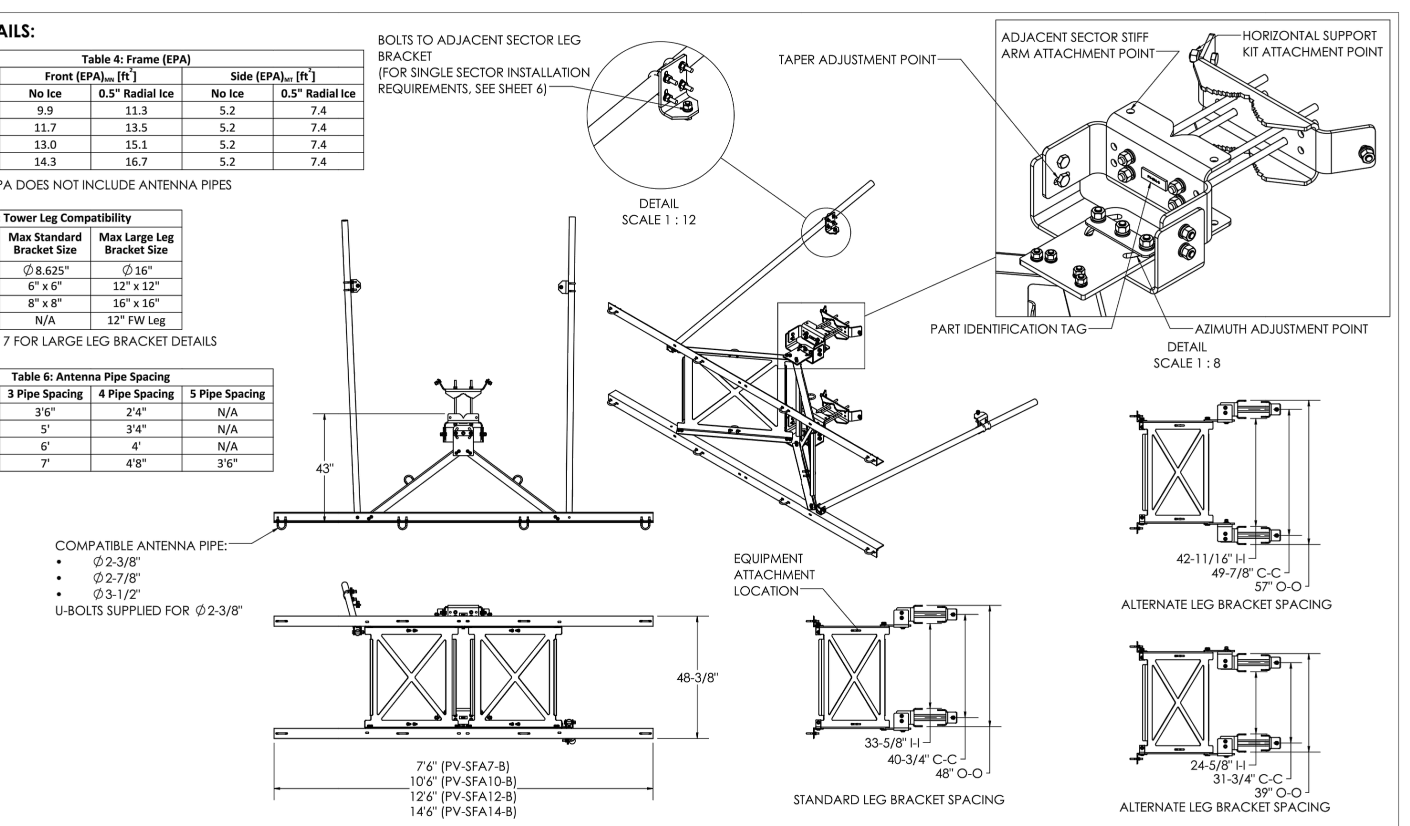

SHEET 3 OF 10	THIRD ANGLE PROJECTION	CATEGORY 01_Self Support	10	ADDED 2-7/8" PIPE	4/9/21	PERFECT VISION
6/2/2021	SCALE 1:36	SERIES 02_V-Frames - Assembled	9	UPDATED 5053	3/23/21	
DIMENSIONS ARE IN INCHES TOLERANCES U.N.O. HOLES: +1/16", -1/32" ANGULAR: PROFILE±1/4°, BEND±2° ALL OTHERS: ±1/16"		TYPE PV-SFA	8	ADDED HSK HK# KIT	2/22/19	L.I.F.E. MOUNT™ SECTOR FRAME
		BY DJN	7	UPDATED CLASSIFICATIONS, ADDED NOTES	3/20/18	DOCUMENT NUMBER SFA-ENG-01-R10
		CHECKED SJS	6	UPDATED CLASSIFICATIONS / TEMPLATE	8/30/17	REV 10
		STATUS APPROVED	REV	DESCRIPTION	DATE	

(16) MOUNT DETAILS
SCALE: NOT TO SCALE

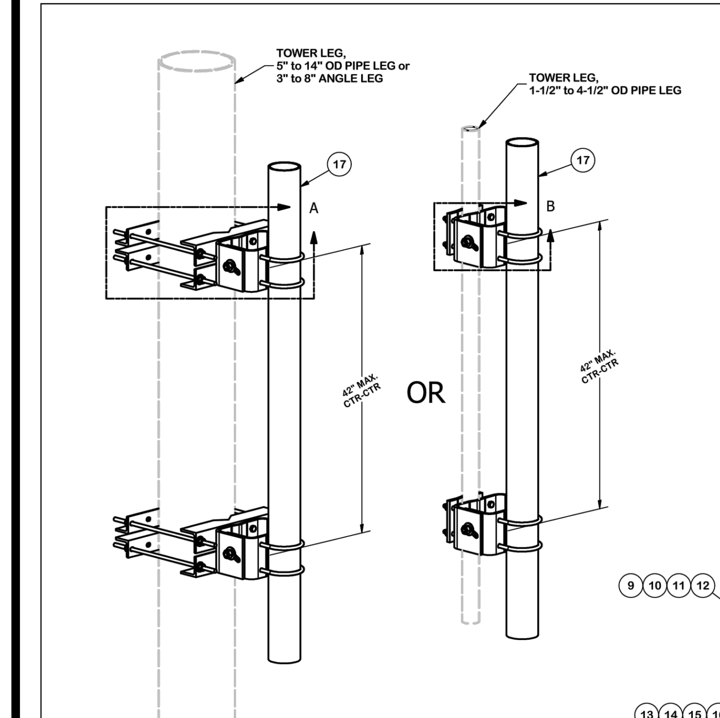

PARTS LIST						
ITEM	QTY	PART NO.	PART DESCRIPTION	LENGTH	UNIT WT.	NET WT.
1	4	X-158320	ANGLE CLAMP	16 1/2 in	8.51	34.03
2	4	X-126501	BRACKET ANGLE LEG MOUNTING	16 1/2 in	7.13	28.51
3	2	X-154463	UNIVERSAL PIPE MOUNTING PLATE (INNER)	16 11/32 in	10.52	21.03
4	2	X-155561	UNIVERSAL PIPE MOUNTING PLATE (OUTER)	20 9/32 in	13.16	26.31
5	2	X-159999	BACKING PLATE	6 9/16 in	5.73	11.46
6	4	X-UB1458	1/2" X 4-5/8" X 7" X 3" GALV U-BOLT		0.97	3.89
7	8	G12R-20	1/2" x 20" GALV. THREADED ROD		1.12	8.92
8	8	G1203	1/2" x 3" HDG HEX BOLT GR5 FULL THREAD	3 in	0.22	1.74
9	8	G1204	1/2" x 4" HDG HEX BOLT GR5 FULL THREAD	4 in	0.27	2.16
9	8	G12065	1/2" x 6-1/2" HDG HEX BOLT GR5 FULL THREAD	5 1/2 in	0.41	3.28
10	32	G12FW	1/2" HDG USS FLATWASHER	3/32 in	0.03	1.09
11	32	G12LW	1/2" HDG LOCKWASHER	1/8 in	0.01	0.44
12	32	G12NUT	1/2" HDG HEAVY 2H HEX NUT		0.07	2.29
13	4	G5802	5/8" x 2" HDG HEX BOLT GR5		0.27	1.08
14	8	G58FW	5/8" HDG USS FLATWASHER	1/8 in	0.07	0.56
15	4	G58LW	5/8" HDG LOCKWASHER		0.03	0.10
16	4	G58NUT	5/8" HDG HEAVY 2H HEX NUT		0.13	0.52
17	1	P472	4-1/2" X 72" SCH. 40 GALVANIZED PIPE	72 in	64.81	64.81
					TOTAL WT. #	148.00

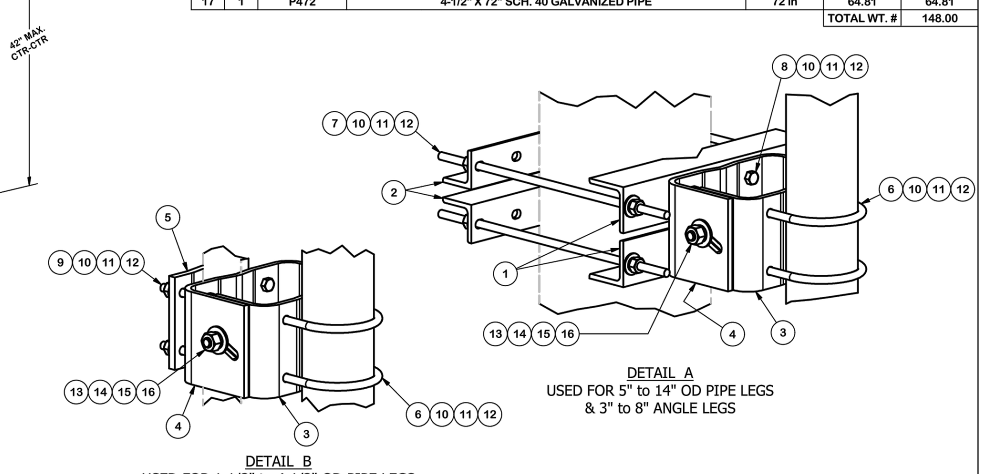

TAPER NOTE:
THE MAXIMUM TAPER ADJUSTMENT IS 5.7° BASED UPON 30" SPACING OF ADJUSTABLE MOUNTING BRACKETS.

THE MAXIMUM TAPER ADJUSTMENT IS 3.8° BASED UPON 45" SPACING OF ADJUSTABLE MOUNTING BRACKET.

REV	DESCRIPTION OF REVISIONS	CPD	BY	DATE
B	DESCRIPTION CHANGE: 10-3/4" OD TO 14" OD PIPE LEG. NO PART CHANGE		JT	2/27/2020
A	CHANGED THE AMOUNT OF 5/8" FLATWASHER FROM 4 TO 8		MS	12/18/2015

REVISION HISTORY

TOLERANCE NOTES
TOLERANCES ON DIMENSIONS, UNLESS OTHERWISE NOTED ARE:
SAWED, SHEARED AND GAS CUT EDGES (± 0.030")
DRILLED AND GAS CUT HOLES (± 0.030") - NO CONING OF HOLES
LASER CUT EDGES AND HOLES (± 0.010") - NO CONING OF HOLES
BENDS ARE ± 1/2 DEGREE
ALL OTHER MACHINING (± 0.030")
ALL OTHER ASSEMBLY (± 0.060")

PROPRIETARY NOTE: THE DATA AND TECHNIQUES CONTAINED IN THIS DRAWING ARE PROPRIETARY INFORMATION OF VALMONT INDUSTRIES AND CONSIDERED A TRADE SECRET. ANY USE OR DISCLOSURE WITHOUT THE CONSENT OF VALMONT INDUSTRIES IS STRICTLY PROHIBITED.

DESCRIPTION: R5 PIPE MOUNT w/ LARGE LEG ADAPTER FOR 1-1/2" to 14" OD PIPE LEGS & 3" TO 8" ANGLE LEGS

SITE PRO 1 — a valmont COMPANY — Engineering Support Team: 1-888-753-7446 — Locations: New York, NY; Atlanta, GA; Los Angeles, CA; Plymouth, IN; Salem, OR; Dallas, TX

CPD NO.	DRAWN BY	ENG. APPROVAL	PART NO.	PAGE
4718	RH18 3/30/2010		R5-LL	1 OF 1
CLASS 81 / SUB 01	DRAWING USAGE: CUSTOMER	CHECKED BY: BMC 4/21/2010	DWG. NO. R5-LL	

(17) ANTENNA PIPE DETAILS
SCALE: NOT TO SCALE

T-Mobile
2323 DELGANY STREET
DENVER, CO 80216

CROWN CASTLE
200 SPECTRUM CENTER DRIVE,
SUITE 1700 & 1800
IRVINE, CA 92618

TOWER ENGINEERING PROFESSIONALS
4710 E ELWOOD ST, STE 9
PHOENIX, AZ 85040
OFFICE: (480) 285-0036
www.tepgroup.net

T-MOBILE
SITE NUMBER: **DN06123A**
(SPRINT RETAIN)

BU #: **877092**
F3/FILL-IN/COLORADO SPGS/CSP18

255 NORTH GATE BLVD
COLORADO SPRINGS, CO
80921

EXISTING 69'-7"
SELF SUPPORT

ISSUED FOR:

REV	DATE	DRWN	DESCRIPTION	DES./QA
0	05/05/21	VBP	CONSTRUCTION	JFJ
1	05/24/21	JLB	CONSTRUCTION	JFJ
2	06/21/21	AOW	CONSTRUCTION	JFJ
3	09/16/21	GVM	CONSTRUCTION	JFJ
4	04/14/22	PSS	CONSTRUCTION	JFJ

COLORADO LICENSED ANDREW RAGNAR BERGLUND 58272 PROFESSIONAL ENGINEER

04/14/22

Andrew R. Berglund, P.E.
Professional Engineer License: #58272

IT IS A VIOLATION OF LAW FOR ANY PERSON, UNLESS THEY ARE ACTING UNDER THE DIRECTION OF A LICENSED PROFESSIONAL ENGINEER, TO ALTER THIS DOCUMENT.

SHEET NUMBER: C-5.3
REVISION: 4

ELECTRICAL DETAILS NOTES:

1. EXISTING EQUIPMENT LAYOUT WAS MADE USING INFORMATION PROVIDED BY CROWN CASTLE. CONTRACTOR TO VERIFY ALL EXISTING INFORMATION IS AS INDICATED ON SITE PLAN. CONTRACTOR IS TO ESTABLISH THE EXISTENCE AND LOCATION OF ALL EXISTING OVERHEAD AND UNDERGROUND UTILITIES. IMMEDIATELY NOTIFY THE CONSTRUCTION MANAGER OF ANY DISCREPANCIES.
2. CONTRACTOR TO ENSURE THAT ALL T-MOBILE EQUIPMENT IS INSTALLED INSIDE T-MOBILE'S LEASE AREA, INCLUDING BUT NOT LIMITED TO, EQUIPMENT CABINETS, UTILITY CABINETS, H-FRAMES, ETC.
3. CONTRACTOR TO VERIFY THAT ALL T-MOBILE EQUIPMENT IS INSTALLED TO MEET THE WORKING CLEARANCE REQUIREMENTS OF NEC 110.26

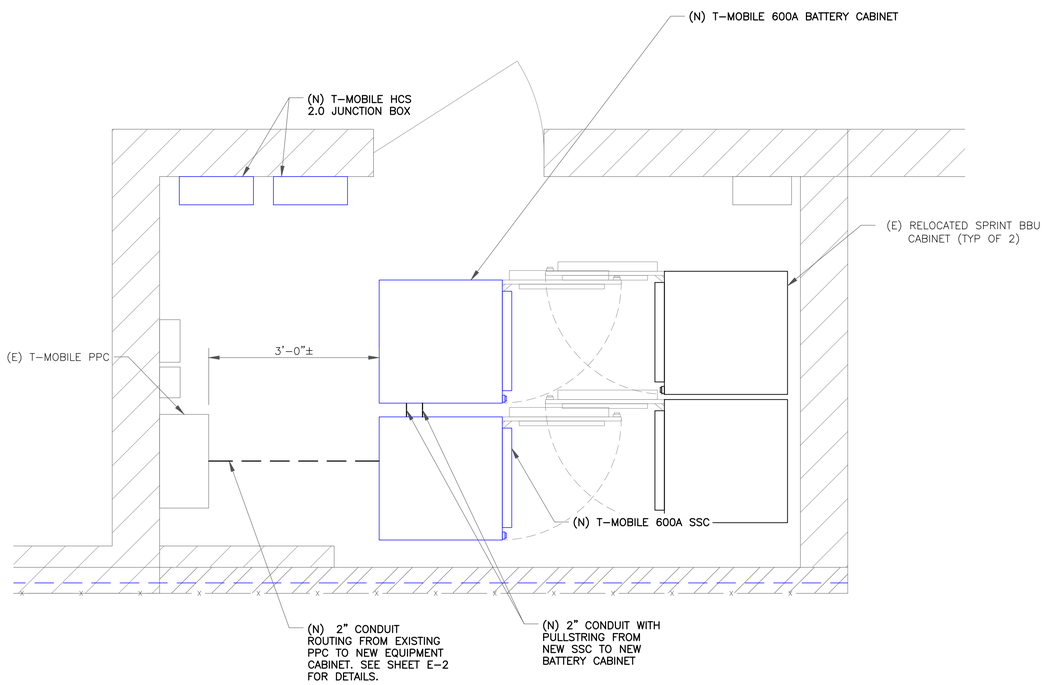

1 ELECTRICAL ROUTING PLAN
SCALE: 1' 6" 0 1' 3/4"=1'-0" (FULL SIZE) 3/8"=1'-0" (11x17)

N

ELECTRICAL DETAILS NOTES:

1. EXISTING EQUIPMENT LAYOUT WAS MADE USING INFORMATION PROVIDED BY CROWN CASTLE. CONTRACTOR TO VERIFY ALL EXISTING INFORMATION IS AS INDICATED ON SITE PLAN. CONTRACTOR IS TO ESTABLISH THE EXISTENCE AND LOCATION OF ALL EXISTING OVERHEAD AND UNDERGROUND UTILITIES. IMMEDIATELY NOTIFY THE CONSTRUCTION MANAGER OF ANY DISCREPANCIES.
2. CONTRACTOR TO ENSURE THAT ALL T-MOBILE EQUIPMENT IS INSTALLED INSIDE T-MOBILE'S LEASE AREA, INCLUDING BUT NOT LIMITED TO, EQUIPMENT CABINETS, UTILITY CABINETS, H-FRAMES, ETC.
3. CONTRACTOR TO VERIFY THAT ALL T-MOBILE EQUIPMENT IS INSTALLED TO MEET THE WORKING CLEARANCE REQUIREMENTS OF NEC 110.26
4. CONTRACTOR TO VERIFY CONDITION AND LOCATION OF ALL EXISTING GROUNDING EQUIPMENT PRIOR TO CONSTRUCTION. TEP DID NOT CONFIRM EXISTING SITE CONDITIONS INCLUDING, BUT NOT LIMITED TO, GROUND RINGS, GROUND RODS, AND GROUND BARS.
5. CONTRACTOR TO VERIFY WITH LOCAL INSPECTOR THAT EGRESS IS OF SUFFICIENT AREA TO GIVE ACCESS TO AND EGRESS FROM THE EQUIPMENT

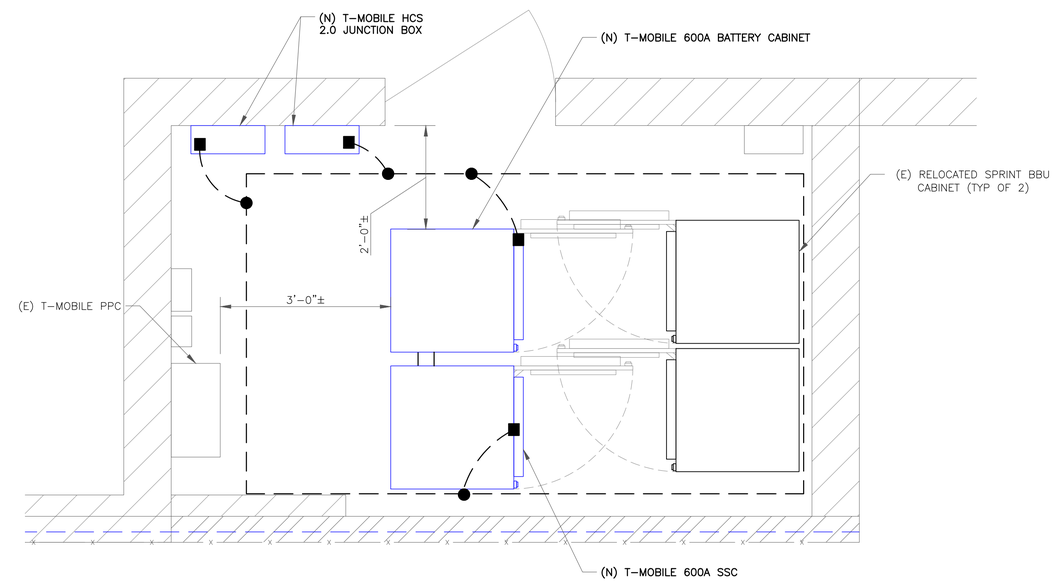

LEGEND	
■	MECHANICAL CONNECTION
●	EXOTHERMIC CONNECTION
▭	ANTENNA GROUND BAR
MGB	MASTER GROUND BAR

2 EQUIPMENT GROUNDING PLAN
SCALE: 1' 6" 0 1' 3/4"=1'-0" (FULL SIZE) 3/8"=1'-0" (11x17)

N

T-Mobile
2323 DELGANY STREET
DENVER, CO 80216

CROWN CASTLE
200 SPECTRUM CENTER DRIVE,
SUITE 1700 & 1800
IRVINE, CA 92618

TOWER ENGINEERING PROFESSIONALS
4710 E ELWOOD ST, STE 9
PHOENIX, AZ 85040
OFFICE: (480) 285-0036
www.tepgroup.net

T-MOBILE
SITE NUMBER: **DN06123A**
(SPRINT RETAIN)

BU #: **877092**
F3/FILL-IN/COLORADO SPGS/CSP18

255 NORTH GATE BLVD
COLORADO SPRINGS, CO
80921

EXISTING 69'-7" SELF SUPPORT

ISSUED FOR:

REV	DATE	DRWN	DESCRIPTION	DES./QA
0	05/05/21	VBP	CONSTRUCTION	JFJ
1	05/24/21	JLB	CONSTRUCTION	JFJ
2	06/21/21	AOW	CONSTRUCTION	JFJ
3	09/16/21	GVM	CONSTRUCTION	JFJ

COLORADO LICENSED
MARK S. QUAKENBUSH
PE.0051287
PROFESSIONAL ENGINEER

09/16/21

Mark S. Quakenbush, P.E.
Professional Engineer License: #51287

IT IS A VIOLATION OF LAW FOR ANY PERSON, UNLESS THEY ARE ACTING UNDER THE DIRECTION OF A LICENSED PROFESSIONAL ENGINEER, TO ALTER THIS DOCUMENT.

SHEET NUMBER: E-1
REVISION: 3

NEW

ELECTRICAL PANEL SCHEDULE

PANEL: PPC — 65/10KAIC SERIES RATED

LOCATION: PPC CABINET

MOUNTING: SURFACE — NEMA RATING:3R

VOLTAGE: 240 / 120 V 1ø,3W
MAINS: 200 A MCB
BUS: 200 A CU

LOAD DESCRIPTION	EMT COND	CU GRND	PHASE NEUT	CKT BRKR	CIR NO.	LOAD AMPS PHASE A	LOAD AMPS PHASE B	CIR NO.	CKT BRKR	PHASE NEUT	CU GRND	EMT COND	LOAD DESCRIPTION
MISC	3/4"	10	10	30	1	0.0			20	10	10	3/4"	LIGHTING & RECEPTACLES
(E) TVSS						4.0		2	1				(E) LIGHT & GFCI
MISC			10		3		0.0		70	4	8	1"	MISC
Cont.				2			56.0	4					(E) 2.5
MISC	3/4"	12	12	15	5	1.5				4			MISC
(E) GFCI				1		56.0		6	2				Cont.
MISC	1-1/4"	8	3	100	7		0.0		15	12	12	3/4"	MISC
(RL) SPARE / OFF							0.0	8	1				(E) SPARE / OFF
MISC			3		9	0.0			20	10	10	3/4"	MISC
Cont.				2		0.0		10	1				(E) SPARE / OFF
MISC	3/4"	12	12	15	11		0.0		50	8	10	3/4"	MISC
(RL) SPARE / OFF							0.0	12					(E) SPARE / OFF
MISC			12		13	0.0				8			MISC
Cont.				2		0.0		14	2				Cont.
MISC	1"	8	4	80	15		0.0		80	4	8	1"	MISC
(E) SPARE / OFF							0.0	16					(E) SPARE / OFF
MISC			4		17	0.0				4			MISC
Cont.				2		0.0		18	2				Cont.
MISC	1-1/4"	6	1	125	19		65.8		80	4	8	1"	MISC
(N) 6160 SITE SUPPORT CABINET							0.0	20					(E) SPARE / OFF
MISC			1		21	65.8				4			MISC
Cont.				2		0.0		22	2				Cont.
BUSSED SPACE					23		0.0						BUSSED SPACE
							0.0	24					
AMPS PER PHASE (CODE LOAD)						127.3	121.8						

CONTRACTOR TO INSTALL APPROVED HANDLE TIE ON ALL SHARED NEUTRAL CIRCUITS.

1 PHASE DEMAND (VA)	
LIGHTING	300
25% OF LIGHTING	75
RECEPTACLES	360
MISCELLANEOUS	29232
25% OF MISCELLANEOUS	7308
TOTAL VA	37275

37.27 KVA ● 240 V 1ø
155.31 A ● 240 V 1ø

SYMBOL LIST

LEGEND:
(E) – EXISTING
(RL) – RELABELED
(N) – NEW

DC -48V FEEDER CABLING CHART

CALCULATIONS ARE BASE ON WORST CASE FULL LOAD AMPS AT 104A –48VDC, NOT EXCEEDING 3% VOLTAGE DROP. IF FIELD CONDITIONS ARE DIFFERENT THAN INDICATED, CONTACT ENGINEER FOR REVISED CALCULATIONS.

DISTANCE FROM FUEL CELL TO EQUIP. CABINET.	–48V, DC SINGLE CABLE	–48V, DC PARALLEL CABLE	CONDUIT SIZE
1'–70'	1–#1/0 CU. AWG		1–1/4"
71'–90'	1–#2/0 CU. AWG		1–1/2"
91'–110'	1–#3/0 CU. AWG		1–1/2"
111'–140'	1–#4/0 CU. AWG		2"
141'–175'		2–#2/0 CU. AWG	2"

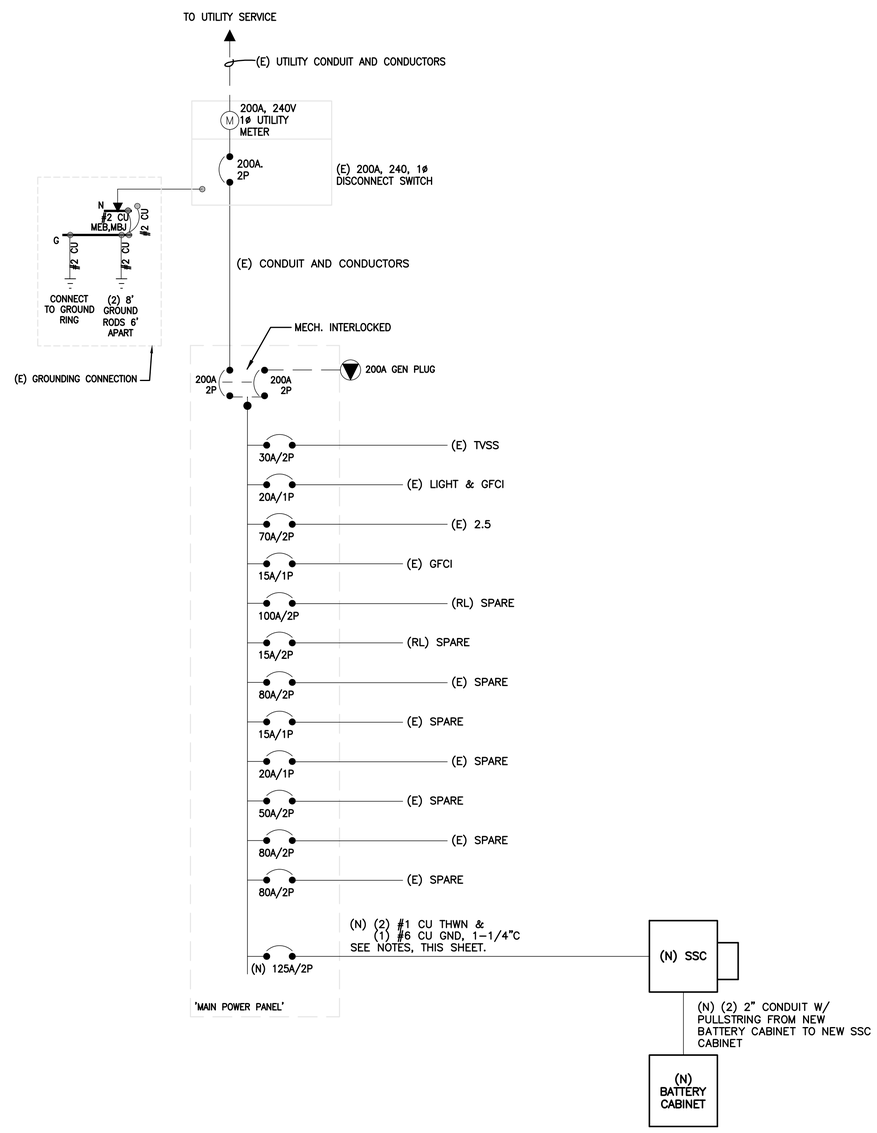

1 ELECTRICAL DETAILS
SCALE: NOT TO SCALE

NOTE:
#6 COPPER WIRE AND GREATER SHALL BE (COPPER) THWN WIRE OR (COPPER) XHHW.

NOTE:
PRIOR TO RUNNING CONDUIT ROUTE – CONTRACTOR SHALL CONTACT THE T–MOBILE PROJECT MANAGER AND VERIFY THE EQUIPMENT CABINET LAYOUT CONFIGURATION AND ROUTE CONDUITS ACCORDINGLY.

NOTE:
PRE–CONSTRUCTION MEETING AND ELECTRICAL EASEMENT REQUIRED.

NOTE:
CONTRACTOR SHALL TAG EACH CIRCUIT CONDUCTOR AT EACH J–BOX, OUTLET, SWITCH, ETC. WITH THE CIRCUITS IDENTIFICATION.

NOTE:
CONTRACTOR SHALL TAG EACH CIRCUIT CONDUCTOR AT EACH J–BOX, OUTLET, SWITCH, ETC. WITH THE CIRCUITS IDENTIFICATION.

NOTE:
PROPOSED CONDUCTORS FROM PPC TO SSC CABINET EXCLUDE NEUTRAL CONDUCTOR AT THE DIRECTION OF T–MOBILE.

NOTE:
ALL EQUIPMENT SHOWN IN THE ONE–LINE DIAGRAM AND PANEL SCHEDULE IN THESE DRAWINGS IS EXISTING UNLESS NOTED OTHERWISE. ONLY NEW CONDUIT AND CONDUCTORS ARE SHOWN ON ONE–LINE DIAGRAM FOR CLARITY.

T-Mobile
2323 DELGANY STREET
DENVER, CO 80216

CROWN CASTLE
200 SPECTRUM CENTER DRIVE,
SUITE 1700 & 1800
IRVINE, CA 92618

TOWER ENGINEERING PROFESSIONALS
4710 E ELWOOD ST, STE 9
PHOENIX, AZ 85040
OFFICE: (480) 285-0036
www.tepgroup.net

T-MOBILE
SITE NUMBER: **DN06123A**
(SPRINT RETAIN)

BU #: **877092**
F3/FILL-IN/COLORADO SPGS/CSP18

255 NORTH GATE BLVD
COLORADO SPRINGS, CO
80921

EXISTING 69'-7" SELF SUPPORT

ISSUED FOR:

REV	DATE	DRWN	DESCRIPTION	DES./QA
0	05/05/21	VBP	CONSTRUCTION	JFJ
1	05/24/21	JLB	CONSTRUCTION	JFJ
2	06/21/21	AOW	CONSTRUCTION	JFJ
3	09/16/21	GVM	CONSTRUCTION	JFJ

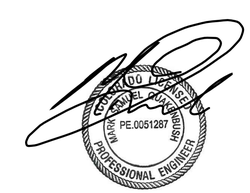

09/16/21

Mark S. Quakenbush, P.E.
Professional Engineer License: #51287

IT IS A VIOLATION OF LAW FOR ANY PERSON, UNLESS THEY ARE ACTING UNDER THE DIRECTION OF A LICENSED PROFESSIONAL ENGINEER, TO ALTER THIS DOCUMENT.

SHEET NUMBER: E-2

REVISION: 3

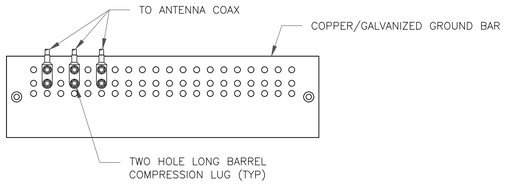

NOTES:

1. DOUBLING UP "OR STACKING" OF CONNECTIONS IS NOT PERMITTED.
2. EXTERIOR ANTIOXIDANT JOINT COMPOUND TO BE USED ON ALL EXTERIOR CONNECTIONS.
3. GROUND BAR SHALL NOT BE ISOLATED FROM TOWER. MOUNT DIRECTLY TO TOWER STEEL.

1 ANTENNA GROUND BAR DETAIL
SCALE: NOT TO SCALE

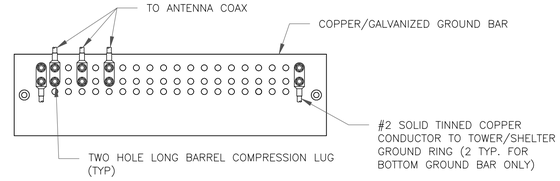

NOTES:

1. EXTERIOR ANTIOXIDANT JOINT COMPOUND TO BE USED ON ALL EXTERIOR CONNECTIONS.
2. GROUND BAR SHALL NOT BE ISOLATED FROM TOWER. MOUNT DIRECTLY TO TOWER STEEL (TOWER ONLY).
3. GROUND BAR SHALL BE ISOLATED FROM BUILDING OR SHELTER.

2 TOWER/SHELTER GROUND BAR DETAIL
SCALE: NOT TO SCALE

WIRE SIZE	BURNDY LUG	BOLT SIZE
#6 GREEN INSULATED	YA6C-2TC38	3/8" - 16 NC SS 2 BOLT
#2 SOLID TINNED	YA3C-2TC38	3/8" - 16 NC SS 2 BOLT
#2 STRANDED	YA2C-2TC38	3/8" - 16 NC SS 2 BOLT
#2/0 STRANDED	YA26-2TC38	3/8" - 16 NC SS 2 BOLT
#4/0 STRANDED	YA28-2N	1/2" - 16 NC SS 2 BOLT

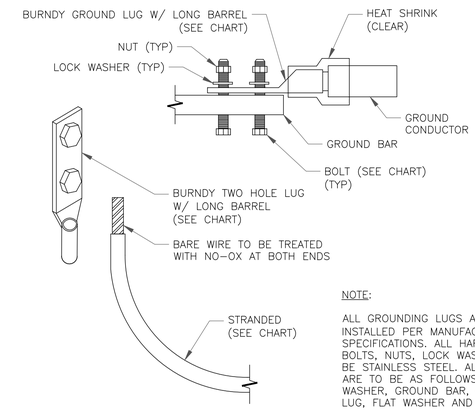

NOTE:

ALL GROUNDING LUGS ARE TO BE INSTALLED PER MANUFACTURER'S SPECIFICATIONS. ALL HARDWARE BOLTS, NUTS, LOCK WASHERS SHALL BE STAINLESS STEEL. ALL HARDWARE ARE TO BE AS FOLLOWS: BOLT, FLAT WASHER, GROUND BAR, GROUND LUG, FLAT WASHER AND NUT.

3 MECHANICAL LUG CONNECTION
SCALE: NOT TO SCALE

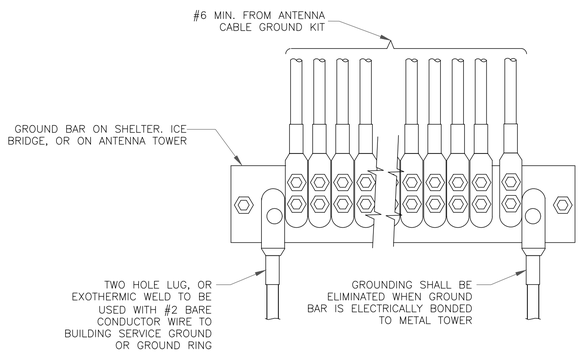

4 GROUNDWIRE INSTALLATION
SCALE: NOT TO SCALE

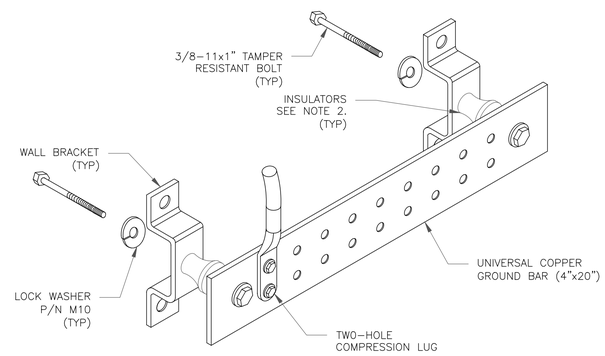

NOTES:

1. DOWN LEAD (HOME RUN) CONDUCTORS ARE NOT TO BE INSTALLED ON CROWN CASTLE USA INC. TOWER, PER THE GROUNDING DOWN CONDUCTOR POLICY QAS-STD-10091. NO MODIFICATION OR DRILLING TO TOWER STEEL IS ALLOWED IN ANY FORM OR FASHION, CAD-WELDING ON THE TOWER AND/OR IN THE AIR ARE NOT PERMITTED.

2. OMIT INSULATOR WHEN MOUNTING TO TOWER STEEL OR PLATFORM STEEL USE INSULATORS WHEN ATTACHING TO BUILDING OR SHELTERS.

5 GROUND BAR DETAIL
SCALE: NOT TO SCALE

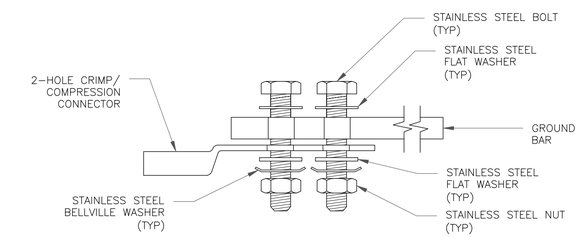

SINGLE CONNECTOR AT GROUND BARS

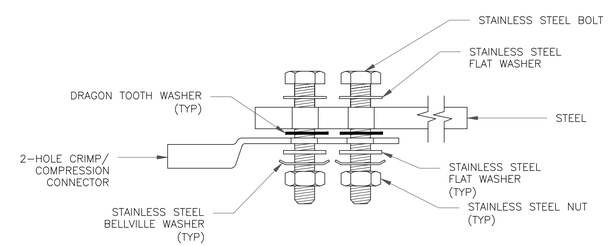

SINGLE CONNECTOR AT STEEL OBJECTS

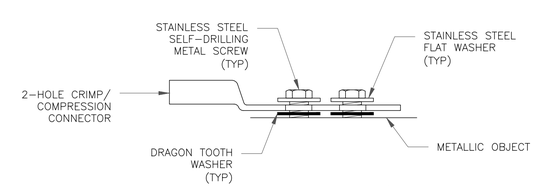

SINGLE CONNECTOR AT METALLIC/STEEL OBJECTS

8 HARDWARE DETAIL FOR EXTERIOR CONNECTIONS
SCALE: NOT TO SCALE

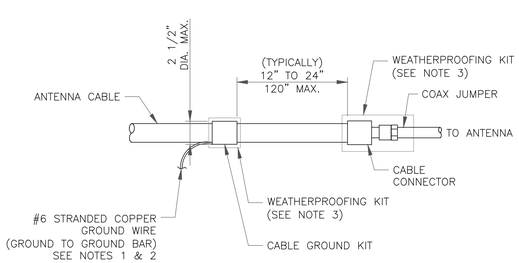

NOTES:

1. DO NOT INSTALL CABLE GROUND KIT AT A BEND AND ALWAYS DIRECT GROUND WIRE DOWN TO GROUND BAR.
2. GROUNDING KIT SHALL BE TYPE AND PART NUMBER AS SUPPLIED OR RECOMMENDED BY CABLE MANUFACTURER.
3. WEATHER PROOFING SHALL BE TWO-PART TAPE KIT, COLD SHRINK SHALL NOT BE USED.

6 CABLE GROUND KIT CONNECTION
SCALE: NOT TO SCALE

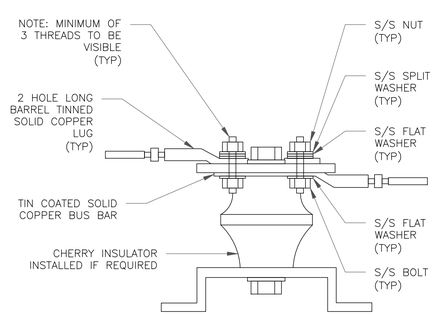

7 LUG DETAIL
SCALE: NOT TO SCALE

T-Mobile
2323 DELGANY STREET
DENVER, CO 80216

CROWN CASTLE
200 SPECTRUM CENTER DRIVE,
SUITE 1700 & 1800
IRVINE, CA 92618

TOWER ENGINEERING PROFESSIONALS
4710 E ELWOOD ST, STE 9
PHOENIX, AZ 85040
OFFICE: (480) 285-0036
www.tepgroup.net

T-MOBILE
SITE NUMBER: **DN06123A**
(SPRINT RETAIN)

BU #: **877092**
F3/FILL-IN/COLORADO SPGS/CSP18

255 NORTH GATE BLVD
COLORADO SPRINGS, CO
80921

EXISTING 69'-7" SELF SUPPORT

ISSUED FOR:

REV	DATE	DRWN	DESCRIPTION	DES./QA
0	05/05/21	VBP	CONSTRUCTION	JFJ
1	05/24/21	JLB	CONSTRUCTION	JFJ
2	06/21/21	AOW	CONSTRUCTION	JFJ
3	09/16/21	GVM	CONSTRUCTION	JFJ

09/16/21

Mark S. Quakenbush, P.E.
Professional Engineer License: #51287

IT IS A VIOLATION OF LAW FOR ANY PERSON, UNLESS THEY ARE ACTING UNDER THE DIRECTION OF A LICENSED PROFESSIONAL ENGINEER, TO ALTER THIS DOCUMENT.

SHEET NUMBER: G-1

REVISION: 3

Section 3 - Proposed Template Images

56790EZ_SR_T.jpg

Configuration 56790EZ_SR_T

* For 5G and LTE Airscale BB dimensioning refer to Fiber Port matrices.

(Alpha, Beta & Gamma)

DRAFT

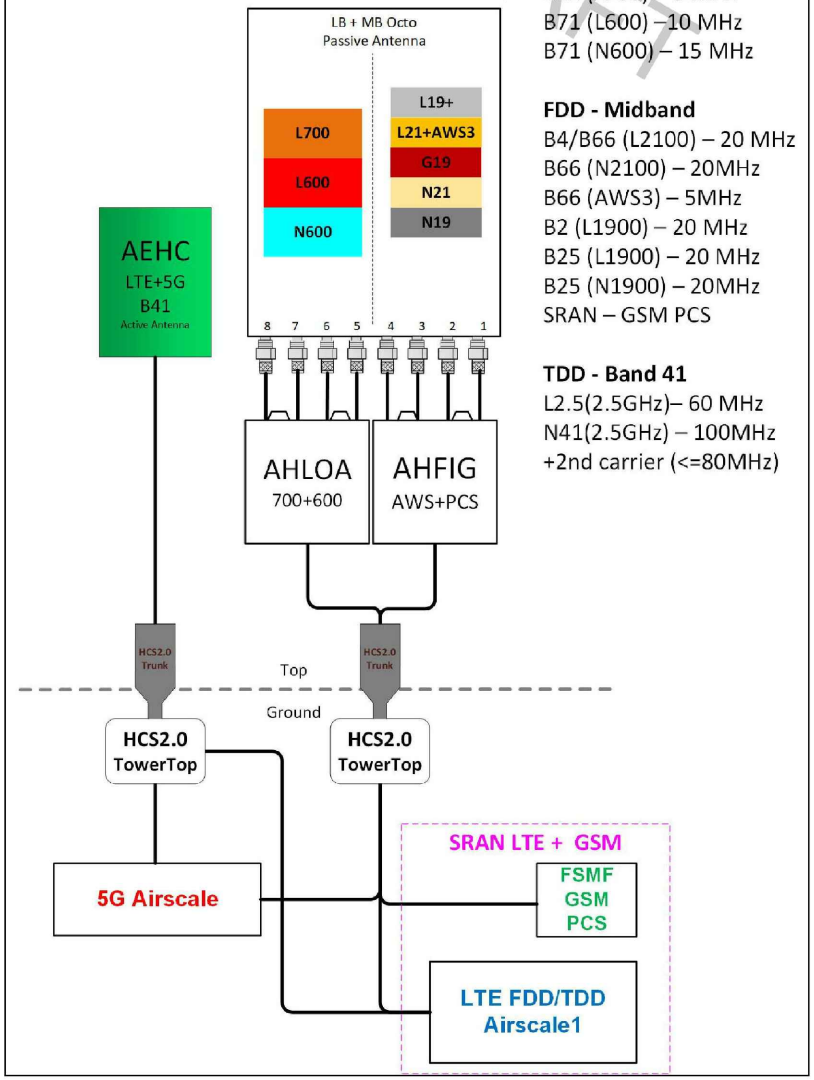

FDD - Lowband
B12 (L700) – 5 MHz
B71 (L600) –10 MHz
B71 (N600) – 15 MHz

FDD - Midband
B4/B66 (L2100) – 20 MHz
B66 (N2100) – 20MHz
B66 (AWS3) – 5MHz
B2 (L1900) – 20 MHz
B25 (L1900) – 20 MHz
B25 (N1900) – 20MHz
SRAN – GSM PCS

TDD - Band 41
L2.5(2.5GHz)– 60 MHz
N41(2.5GHz) – 100MHz
+2nd carrier (<=80MHz)

FOR REFERENCE ONLY