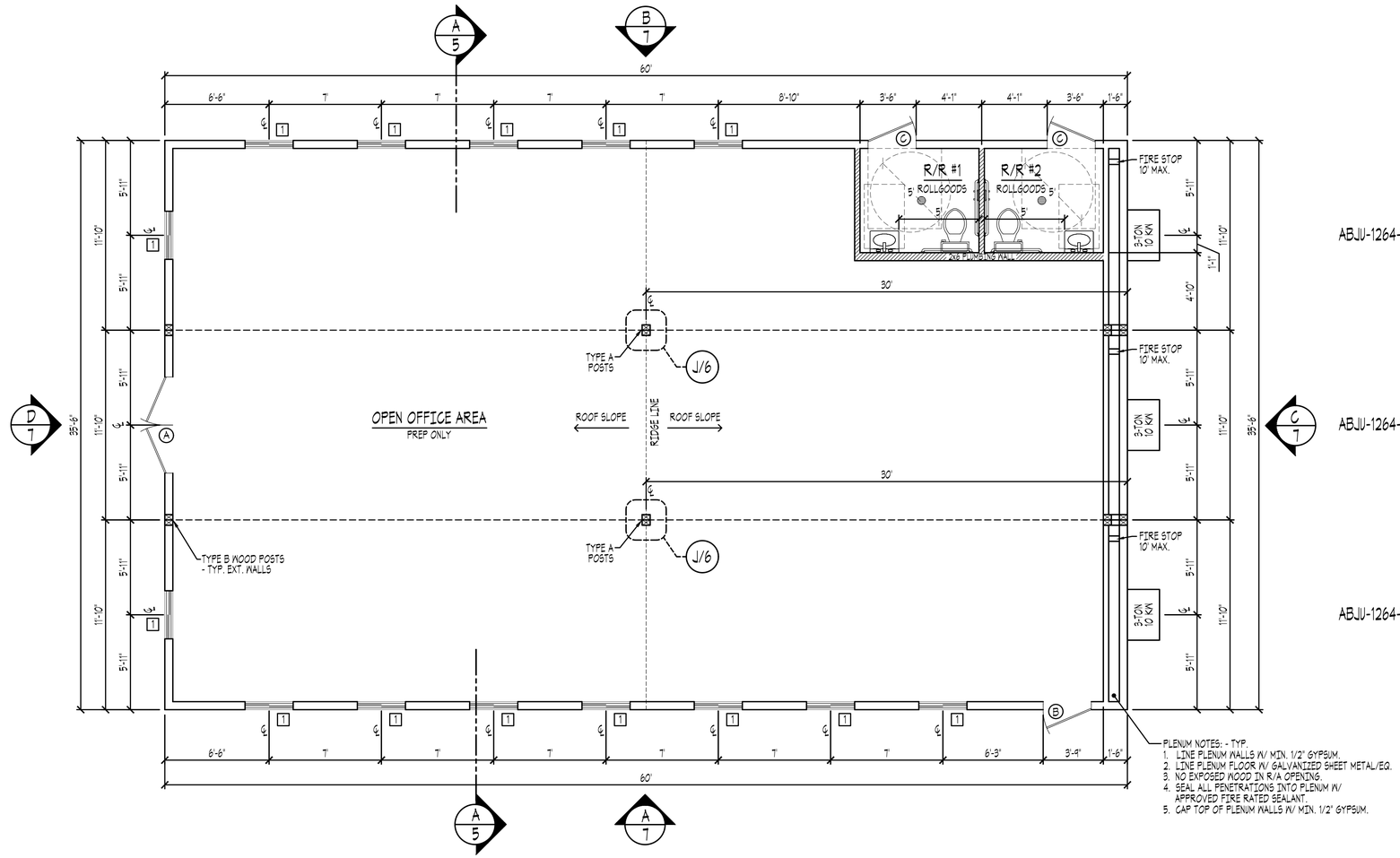

NORTH ARROW FOR MANUFACTURING PURPOSES ONLY.

INTERIOR WALLS INSULATED W/ R-11 BATT INSULATION.

FULL HEIGHT WALLS - IF APPLICABLE
ALL MOD-LINE WALLS ARE TO BOTTOM OF BEAM

CUSTOMER APPROVAL

☐ APPROVED
☐ APPROVED EXCEPT AS NOTED
☐ REVISE AS NOTED AND RESUBMIT

APPROVAL BY_____ DATE _____

IT IS UNDERSTOOD THAT THIS APPROVAL REPRESENTS THE FINAL AGREEMENT BETWEEN ALL PARTIES AS TO PROJECT SPECIFICATIONS AND METHODS OF CONSTRUCTION. ANY MODIFICATION TO THESE PLANS MUST BE MADE BY CHANGE ORDER AND HAVE THE SIGNATURE OF ALL PARTIES INVOLVED. THIS APPROVAL SUPERSEDES ALL OTHER PLANS AND SPECIFICATIONS.

THIS PRINT MUST BE SIGNED, DATED AND RETURNED TO ADVANCED MODULAR MANUFACTURING
1168 S. LEGACY VIEW ST. • SALT LAKE CITY, UTAH 84104

OCCUPANCY LOAD PER IBC/TABLE 1004.1.1

BUSINESS AREA = 100 SQ. FT. GROSS = 21.6 OCCUPANTS

TOTAL OCCUPANT LOAD PER TABLE 1004.1.1 = 22 OCCUPANTS

GENERAL NOTES -- COLORADO --

1. CODES: 2018 IBC. 2018 IMC. 2018 IPC. 2020 NEC. 2015 IECC. 8 CRR 1302-14 CDPH ADMINISTRATIVE RULES.
2. OCCUPANCY: B DIVISION:
3. CONSTRUCTION TYPE: VB USEABLE SQ. FT.: 2,160
4. OCCUPANCY LOAD: 22 MAX.
5. HANDICAP REQUIREMENTS: ICC A117.1-2009
6. DESIGN LOADS: LIVE FLOOR: 50 LBS/SQ. FT./2000# CONC.
   EXIT WAY: N/A LBS/SQ. FT.
   LIVE ROOF: 30 LBS/SQ. FT.
   GROUND SNOW: 43 LBS/SQ. FT.
   ULT. WIND: 130 MPH; EXPOSURE "C"
   SEISMIC DESIGN: D, Ss=1.50g, S1=0.80g.
7. ELECTRICAL SYSTEMS: AS SHOWN
8. PLUMBING SYSTEMS: AS SHOWN
9. MECHANICAL SYSTEMS: AS SHOWN
10. ADA CODES REQUIRE ACCESSIBILITY FOR THE PHYSICALLY CHALLENGED. ACCESSIBILITY IS THE RESPONSIBILITY OF THE LOCAL USER. ANY RAMP STRUCTURE SHOULD BE APPROVED BY THE LOCAL BUILDING AUTHORITY.
11. STATE INSPECTIONS: (3RD. PARTY) ICC CERTIFIED.

GENERAL SPECIFICATIONS

1. REFER TO THESE PLANS PLANS FOR SPECIFICATIONS & LOCATIONS OF ALL WALLS, PARTITIONS, DOORS, WINDOWS, & OTHER ARCHITECTURAL ELEMENTS.
2. BUILDING TO HAVE A GENERAL MANUFACTURES WARRANTY OF ONE (1) YEAR.
3. BUILDING TO HAVE A ROOFING WARRANTY OF A MIN. TWENTY-FIVE (25) YEARS.
4. BUILDING SECTIONS TO BE DELIVERED TO SITE WATER TIGHT.
5. ALL LUMBER SHALL BE GRADED STAMPED BY AN APPROVED AGENCY. (WWPA, WCLG, OR EQUAL). WHERE HEM FIR IS SPECIFIED ON THE PLANS, THE SAME GRADE OF DOUGLAS FIR-LARCH MAY BE USED.
6. ALL SHEATHING SHALL BE APA APPROVED SHEATHING.
7. ALL NAILS SHOWN ON PLANS ARE BOX NAILS (UNLESS NOTED OTHERWISE).
   NAIL SIZES TO BE AS FOLLOWS:
   6d BOX NAILS: 0.099" Ø X 2" LONG
   8d BOX NAILS: 0.113" Ø X 2-1/2" LONG
   10d BOX NAILS: 0.128" Ø X 3" LONG
   16d BOX NAILS: 0.135" Ø X 3-1/2"LONG
8. "PNEUTEK" FASTENERS MUST BE INSTALLED PER ICC-ES #ESR-2941
9. "HILTI" POWDER DRIVEN FASTENERS MUST BE INSTALLED PER ICC-ES #ESR-1663 OR #ESR-2269.
10. SELF DRILLING, SELF TAPPING SCREWS MUST BE INSTALLED IN ACCORDANCE W/ MFG'S RECOMMENDATIONS.
11. LAG SCREWS MUST BE INSTALLED W/ 3/16" Ø PILOT HOLES.
12. METAL FRAMING CONNECTORS MUST BE MANUFACTURED BY "SIMPSON" OR MUST BE EQUIVALENT. FASTENERS MUST BE INSTALLED IN COMPLIANCE W/ THE MFG'S LISTING.
13. ALL STRUCTURAL STEEL SHALL CONFORM TO ASTM A-36.
14. ALL LIGHT GAGE STEEL SHALL CONFORM TO ASTM A-570.
15. ALL WELDING SHALL BE BY ELECTRIC ARC PROCESS PER AWS D1.1. ALL WELDING SHALL BE W/ E70XX ELECTRODE. ALL WELDING SHALL BE PERFORMED BY CERTIFIED WELDERS.
16. ALL BOLTS SHALL CONFORM TO ASTM A307.
17. ALL HOLES IN CHASSIS TO BE PUNCHED OR DRILLED. ALL HOLES TO BE 1/16" Ø OVER BOLT SIZE.
18. CHASSIS SHALL BE COATED W/ 3 MIL. BLACK LATEX PAINT.

FRAMING SPECIFICATIONS

1. FRAME: 12" "PACO" I-BEAM, OUTRIGGER TYPE, DETACHABLE HITCH, 4-AXLES
   (3-BRAKE, 1-IDLER), (8) 14-PLY TIRES (NEW).
2. FLOOR: JOISTS: 2x8's (DFL #2/BETTER) @ 16" O.C; NOTE: DOUBLE RIM JOISTS ON ENTIRE PERIMETER.
   INSULATION: R-30 UNFACED FIBERGLASS BATTS;
   FLOOR BOTTOM: "SHEPWEAVE II" 5-MIL CLASS "A" PLASTIC VAPOR BARRIER;
   NOTES: (1) PLASTIC LOOPED TO ACCOMMODATE R-30 INSULATION;
   (2) ALL PENETRATIONS THROUGH FLOOR BOTTOM MUST BE COMPLETELY SEALED FOR RODENT PROTECTION.
   DECKING: 3/4" T&G PLYWOOD; NOTE: DECKING MUST BE GLUED & SCREWED;
   SEE FINISHES FOR FLOOR PREPARATION.
3. ROOF: COMPLEX STYLE: SLOPE 8" IN 30' TO EACH END;
   JOISTS: 2x12's (DFL #2/BETTER) @ 24" O.C.
   INSULATION: R-38 UNFACED FIBERGLASS BATTS;
   ROOF BOTTOM: "SHEPWEAVE II" 5-MIL CLASS "A" PLASTIC;
   SHEATHING: 19/32" APA RATED OSB/EQUAL.
4. SUPPORT POSTS: SEE DETAIL ON SHEET 5, FOR MATERIALS AND CONSTRUCTION.
5. WALLS: EXTERIOR: 2x6 @ 16" O.C.;
   INTERIOR: 2x4 @ 16" O.C. (U.N.O.);
   PLATES: TOP: DOUBLE 2x; BOTTOM: SINGLE 2x.
6. RETURN AIR: 24" x 24" GRILLES IN T-GRID CEILING, DUCTED TO PLENUM WALLS, SEE SHEET 4.

FINISH SPECIFICATIONS

1. EXTERIOR
   WALLS: INSULATION: R-19 UNFACED FIBERGLASS BATTS;
   SHEATHING: 7/16" APA RATED "ZIP SYSTEM" SHEATHING;
   BUILDING WRAP: N/A;
   SIDING: TO BE PROVIDED AND INSTALLED ON SITE BY OTHERS;
   TRIM: TO BE PROVIDED AND INSTALLED ON SITE BY OTHERS;
   ROOF: ROOFING: 45-MIL "BLACK" DIRECT GLUE EPDM RUBBER ROOFING SYSTEM.
2. INTERIOR
   FLOOR: ROLLGOODS: "ARMSTRONG" "CONNECTION CORLON" 80-MIL W/ WELDED SEAMS (COLOR: #88111 OTTER GRAY);
   ROD: (IF APPLICABLE) (COLOR: TO MATCH ROLLGOODS);
   NOTE: ALL OTHER FLOORING TO BE PROVIDED AND INSTALLED ON SITE BY OTHERS.
   WALLS: FINISH: (A) SHEATHING: 5/8" TYPE "X" GYPSUM;
   FINISH: TT&P TO BE DONE ON SITE BY OTHERS;
   (B) FLOOR TO CEILING 1/8" "NUDO" CLASS "C" FRP OVER 7/16" OSB AROUND ALL WALLS IN RESTROOMS (COLOR: WHITE);
   INSULATION: R-11 UNFACED FIBERGLASS BATTS IN WALLS AS SHOWN ON PLAN;
   BASE: "FLEXCO" 4" RUBBER COVE IN RESTROOMS (COLOR: #014 MEDIUM GRAY);
   NOTE: ALL OTHER BASE PROVIDED AND INSTALLED ON SITE BY OTHERS.
   MOULDINGS: FRP & FACTORY STANDARD PRE-FINISHED "WOODGRAIN" WHERE REQUIRED.
   CEILING: T-GRID SUSPENDED CEILING SYSTEM @ 10'1" A.F.F. SEE SHEET 3.

DOORS & WINDOWS

1. EXTERIOR DOORS: (A) 6070 ALUMINUM STOREFRONT STYLE SYSTEM W/ "S-PARKER" #441BC CLOSURE, THRESHOLD, WEATHERSTRIP, SWEEP & DRIP CAP. (COLOR: MILL)(TOTAL: 1);
   HARDWARE: PUSH/PULL STYLE HARDWARE W/KEYED DEADBOLT.
   (B) 3068 "ARTEK" 20-GA. STEEL DOOR W/ 10" x 10" VISION KIT IN 16-GA. KD ADJUSTABLE STEEL FRAME AND DRIP CAP (COLOR: "SW" #SW 7669 SUMMIT GRAY)(TOTAL: 1);
   HARDWARE: HINGES: 4.5x4.5 NRP, #26D;
   LOCKSET: "S-PARKER" GRADE 2 KEYED LEVER;
   WEATHERSTRIP: "HAGER" #8415V, #AL, (HEAD & JAMB);
   SWEEP: "HAGER" #1505XN, #AL, DOOR WIDTH;
   THRESHOLD: "HAGER" #4125A, AL, DOO, #AL;
   CLOSURE: "S-PARKER" #441, #AL.
   (C) 3068 "ARTEK" 20-GA. STEEL DOOR IN 16-GA. KD ADJUSTABLE STEEL FRAME AND DRIP CAP (COLOR: "SW" #SW 7669 SUMMIT GRAY)(TOTAL: 2);
   HARDWARE: HINGES: 4.5x4.5 NRP, #26D;
   LOCKSET: GRADE 2 PUSH/PULL WITH KEY ONLY DEAD BOLT AND ROLLER LATCH;
   WEATHERSTRIP: "HAGER" #8415V, #AL, (HEAD & JAMB);
   SWEEP: "HAGER" #1505XN, #AL, DOOR WIDTH;
   THRESHOLD: "HAGER" #4125A, AL, DOO, #AL;
   CLOSURE: "S-PARKER" #441, #AL.
2. INTERIOR DOORS: N/A.
3. WINDOWS: (1) 3050 "AMSCO" "WHITE" VINYL FRAME, SINGLE-HUNG VS, W/ INSULATED CLEAR LOW-E GLASS AND INSECT SCREEN (TOTAL: 14).
4. BLINDS: 1" METAL SLAT TYPE ALL WINDOWS (COLOR: WHITE).

CABINETRY & APPLIANCES

1. CABINETRY: N/A
2. WATER HEATERS: SEE SHEET 4.
3. FIRE EXTINGUISHERS: TO BE PROVIDED AND INSTALLED BY OTHERS ON SITE.

SKIRTING & MISC.

1. OPTIONAL.

REVISIONS	DATE
(1)	09/28/2020
(2)	09/24/2020

SHEET CONTENTS: FLOOR PLAN

PROJECT TITLE:
36' X 60'
GOLF CLUB AT FLYING HORSE
MODULAR OFFICE BUILDING
PRESENTED BY:
VESTA MODULAR, SOUTHFIELD MI.

ADVANCED MODULAR MANUFACTURING
1168 SOUTH LEGACY VIEW STREET
SALT LAKE CITY, UTAH 84104
PH. (801) 571-9841
FAX (801) 456-7699

DRAWN BY: THE GHOST
CHECKED BY: C.J.L.

DATE.
SEPTEMBER 22, 2020

SHEET
1 OF 7

VESTA366OGOLFCLUB

SCALE:
1/4" = 1'-0"

FLOOR PLAN

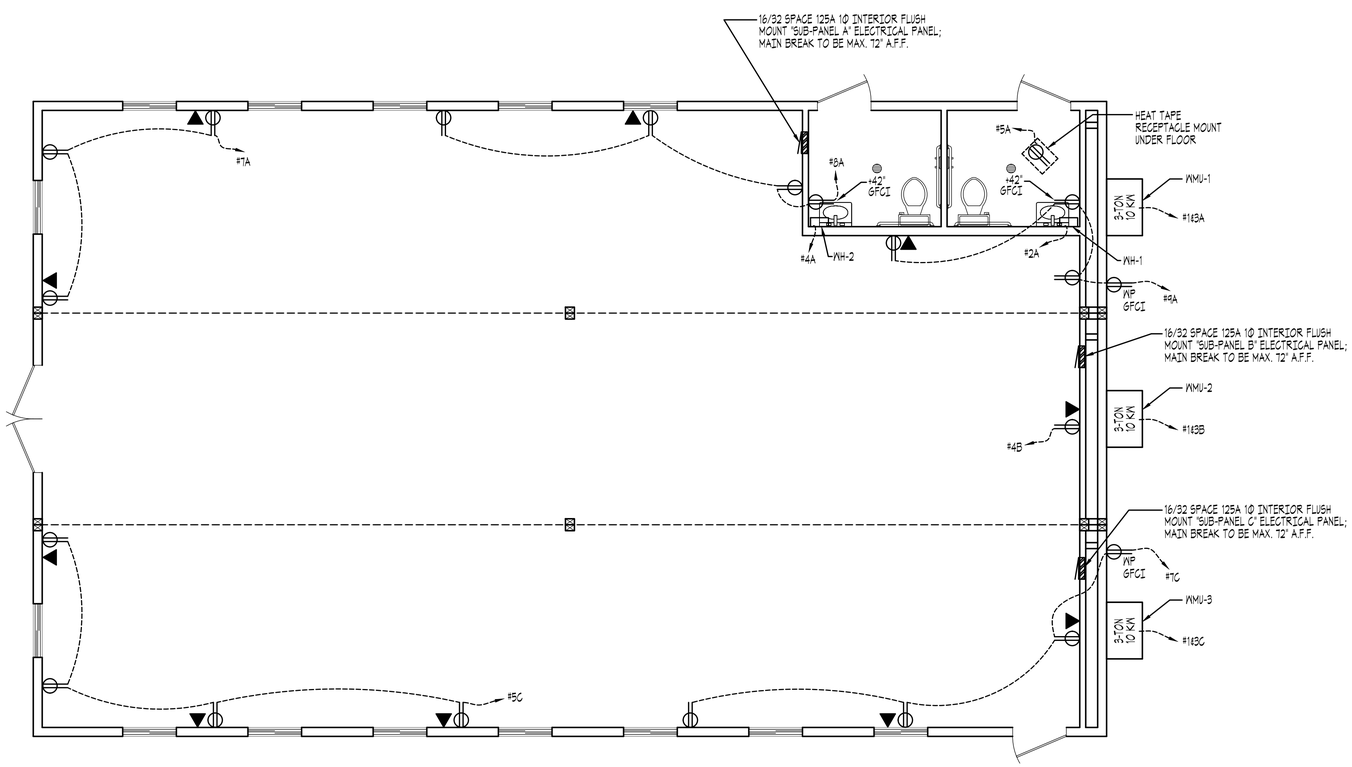

NOTE:
BARD UNITS HAVE AN INTERNAL DISCONNECT BEHIND A MARKED ACCESS PANEL

NORTH ARROW FOR MANUFACTURING PURPOSES ONLY.

NOTE: STUB TWO (2) SPARE 1" EMT CONDUITS & TWO (2) SPARE 3/4" EMT CONDUITS INTO CEILING CAVITY FROM PANEL FOR FUTURE USE BY OWNER.

NOTE:
THE FACTORY PROVIDES 3 PANELS W/CONDUIT STUBS OUT BOTTOM. PERMANENT POWER PROVIDED TO PANELS ON SITE BY OTHERS. FACTORY TAKES NO RESPONSIBILITY FOR PROBLEMS RESULTING FROM IMPROPER SITE INSTALLATION.

ELECTRICAL SPECIFICATIONS

1. ALL WIRING TO COMPLY WITH CODES LISTED ON SHEET 1.
2. ALL WIRING TO BE IN 'ENCORE' MC CABLE OR 'ALLIED' 'EZ-PULL' EMT CONDUIT.
   ALL WIRE/CONDUCTORS TO BE #12 OR LARGER.
   ALL WIRING MEETS ALL CURRENT NEC REQUIREMENTS INCLUDING NEC 550.
3. LIGHTS: SEE REFLECTED CEILING PLAN, SHEET 3.
4. COVER PLATES: ALL TO BE UNBREAKABLE NYLON (COLOR: TO MATCH DEVICE).
5. RECEPTACLES: 'PASS & SEYMOUR'
   20 AMP DUPLEX TYPE @ 18" AFF. (U.N.O.) (COLOR: WHITE);
   20 AMP DOUBLE DUPLEX TYPE @ 18" AFF. (U.N.O.) (COLOR: WHITE).
   NOTES: (A) WET AREA(S) TO BE GFCI PROTECTED.
   (B) INSTALL DEDICATED RECEPTACLE UNDER BUILDING ON GFEP BREAKER FOR HEAT TAPE (120V, 960W).
   (C) EXTERIOR RECEPTACLES TO BE WEATHER-RESISTANT (WR) TYPE.
   (D) PROVIDE 'WHILE-IN-USE' COVERS IN ALL EXTERIOR RECEPTACLES.
6. COMMUNICATION JACKS:
   4-SQ. W/ SINGLE GANG MUD RING @ 18" AFF. U.N.O. STUB 3/4" EMT INTO CEILING CAVITY.
7. JUNCTION BOXES:
   4-SQ. AS SHOWN ON PLAN; CAP WIRES, COVER AND LABEL COVER W/ CIRCUIT NUMBER;
   4-SQ. W/ SINGLE GANG MUD @ 18" AFF U.N.O; CAP WIRES, COVER W/ WATERPROOF COVER AND LABEL AS SIGN AND CIRCUIT NUMBER.
8. ELECTRICAL PANELS: REFER TO PLAN FOR SPECIFIC LOCATIONS.
   'SIEMENS' #SN1632B1125 (SN SERIES, 120/240V, 125A, 1PH, NEMA 1) 16/32 SPACE LOAD CENTER W/ 'SIEMENS' 'QP' 10,000A IR STYLE SNAP-IN BREAKERS' (TOTAL: 3).
9. ------- DASHED LINE DENOTES RECEPTACLE CIRCUITS.
10. DIMENSIONS ARE TO BOTTOM OF BOX U.N.O.
11. ALL DEDICATED CIRCUITS CALCULATED AT 960WATTS 8AMPS.
12. SEE SHEET 4 FOR WATER HEATER (WH) SPECS.
13. SEE SHEET 4 FOR WALL MOUNT HVAC (WMU) SPECS.

DEVICE GROUNDING DETAIL

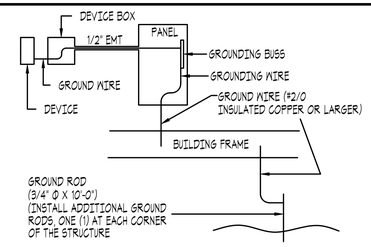

PANEL "SUB-PANEL A"

VOLTS 120/240 PHASE 1 , WIRES 4 MCB 125 A 10,000 AIC SYMMETRICAL

	CIRC NO.	TRIP AMPS	NO. POLES	LOAD SERVED	PHASE LOAD-VA A	PHASE LOAD-VA B	LOAD SERVED	CIRC NO.	TRIP AMPS	NO. POLES
	* 1	60	2	HVAC (WMU-1)	8870 / 3500		WTR. HTR.(WH-1)	2	30	1 *
	3	-	-	-		8870 / 3500	WTR. HTR.(WH-2)	4	30	1 *
GFEP →	5	20	1	HEAT TAPE	960 / 134		LIGHTING	6	20	1
	7	20	1	RECEPTACLES		540 / 120	RECEPTACLES	8	20	1
	9	20	1	RECEPTACLES	120			10		
	11							12		
	13							14		
	15							16		

TOTAL CONNECTED LOAD 23.41 KVA 11,984 11,430 TOTAL CONNECTED LINE AMPS 97.6

FEEDER: 2" CONDUIT OUT BOTTOM W/ (2) #1, (1) #1 NEUT & (1) #6 GND
NOTE: FEEDER WIRES TO BE PROVIDED ON SITE BY OTHERS.

* BREAKER & WIRE/CONDUCTOR SIZE SHALL BE CHECKED & CHANGED, IF REQUIRED, AFTER EQUIPMENT HAS BEEN PURCHASED.

PANEL "SUB-PANEL B"

VOLTS 120/240 PHASE 1 , WIRES 4 MCB 125 A 10,000 AIC SYMMETRICAL

CIRC NO.	TRIP AMPS	NO. POLES	LOAD SERVED	PHASE LOAD-VA A	PHASE LOAD-VA B	LOAD SERVED	CIRC NO.	TRIP AMPS	NO. POLES
* 1	60	2	HVAC (WMU-2)	8870 / 33		LIGHTING	2	20	1
3	-	-	-		8870 / 180	RECEPTACLES	4	20	1
5							6		
7							8		
9							10		
11							12		
13							14		
15							16		

TOTAL CONNECTED LOAD 13.55 KVA 6,703 6,850 TOTAL CONNECTED LINE AMPS 56.5

FEEDER: 2" CONDUIT OUT BOTTOM W/ (2) #1, (1) #1 NEUT & (1) #6 GND
NOTE: FEEDER WIRES TO BE PROVIDED ON SITE BY OTHERS.

* BREAKER & WIRE/CONDUCTOR SIZE SHALL BE CHECKED & CHANGED, IF REQUIRED, AFTER EQUIPMENT HAS BEEN PURCHASED.

PANEL "SUB-PANEL C"

VOLTS 120/240 PHASE 1 , WIRES 4 MCB 125 A 10,000 AIC SYMMETRICAL

CIRC NO.	TRIP AMPS	NO. POLES	LOAD SERVED	PHASE LOAD-VA A	PHASE LOAD-VA B	LOAD SERVED	CIRC NO.	TRIP AMPS	NO. POLES
* 1	60	2	HVAC (WMU-3)	8870 / 415		LIGHTING	2	20	1
3	-	-	-		8870 / 830	LIGHTING	4	20	1
5	20	1	RECEPTACLES	720			6		
7	20	1	RECEPTACLES		720		8		
9							10		
11							12		
13							14		
15							16		

TOTAL CONNECTED LOAD 15.91 KVA 7,885 8,020 TOTAL CONNECTED LINE AMPS 66.2

FEEDER: 2" CONDUIT OUT BOTTOM W/ (2) #1, (1) #1 NEUT & (1) #6 GND
NOTE: FEEDER WIRES TO BE PROVIDED ON SITE BY OTHERS.

* BREAKER & WIRE/CONDUCTOR SIZE SHALL BE CHECKED & CHANGED, IF REQUIRED, AFTER EQUIPMENT HAS BEEN PURCHASED.

CUSTOMER APPROVAL
☐ APPROVED
☐ APPROVED EXCEPT AS NOTED
☐ REVISE AS NOTED AND RESUBMIT

APPROVAL BY_____ DATE _____

IT IS UNDERSTOOD THAT THIS APPROVAL REPRESENTS THE FINAL AGREEMENT BETWEEN ALL PARTIES AS TO PROJECT SPECIFICATIONS AND METHODS OF CONSTRUCTION. ANY MODIFICATION TO THESE PLANS MUST BE MADE BY CHANGE ORDER AND HAVE THE SIGNATURE OF ALL PARTIES INVOLVED. THIS APPROVAL SUPERSEDES ALL OTHER PLANS AND SPECIFICATIONS.
THIS PRINT MUST BE SIGNED, DATED AND RETURNED TO ADVANCED MODULAR MANUFACTURING
1168 S. LEGACY VIEW ST. • SALT LAKE CITY, UTAH 84104

REVISIONS	DATE
(1)	-

SHEET CONTENTS: ELECTRICAL PLAN

PROJECT TITLE:
36' X 60'
GOLF CLUB AT FLYING HORSE
MODULAR OFFICE BUILDING
PRESENTED BY:
VESTA MODULAR, SOUTHFIELD MI.

ADVANCED MODULAR MANUFACTURING
1168 SOUTH LEGACY VIEW STREET
SALT LAKE CITY, UTAH 84104
PH. (801) 571-9841
FAX (801) 456-7699
DRAWN BY: THE GHOST
CHECKED BY: C.J.J.

DATE.
SEPTEMBER 30, 2020

SHEET
2 OF 7
VESTA3660GOLFCLUB

SCALE:
1/4" = 1'-0"

ELECTRICAL PLAN

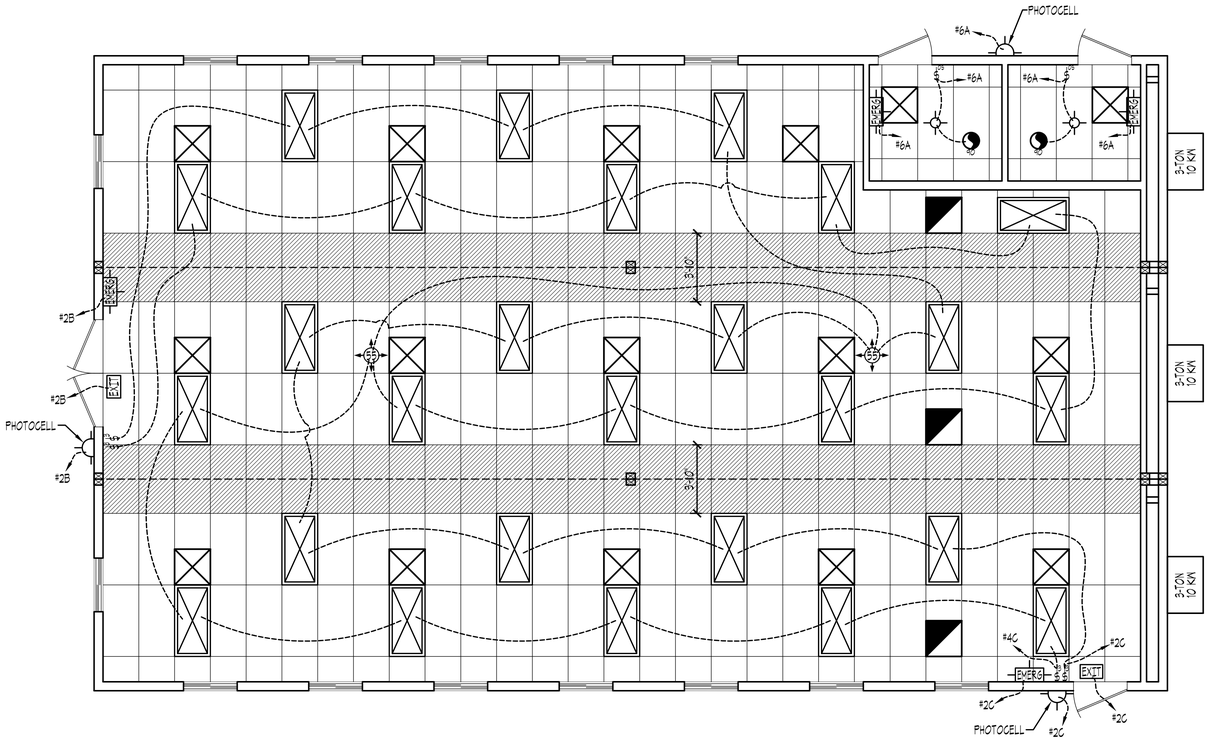

HITCH END

NOTE:
SEE SHEET 2, FOR ELECTRICAL PANEL SCHEDULES.

N
NORTH ARROW FOR MANUFACTURING PURPOSES ONLY.

SITE INSTALLED CEILING AREAS - TYP.

NOTE: IF APPLICABLE
ALL LIGHT FIXTURES, EXIT SIGNS, S/A DIFFUSERS, R/A GRILLES, ETC. SHOWN IN SHADED AREAS TO BE INSTALLED AND TESTED ON SITE BY OTHERS - NOT FACTORY.

CUSTOMER APPROVAL

☐ APPROVED
☐ APPROVED EXCEPT AS NOTED
☐ REVISE AS NOTED AND RESUBMIT

APPROVAL BY_____ DATE _____

IT IS UNDERSTOOD THAT THIS APPROVAL REPRESENTS THE FINAL AGREEMENT BETWEEN ALL PARTIES AS TO PROJECT SPECIFICATIONS AND METHODS OF CONSTRUCTION. ANY MODIFICATION TO THESE PLANS MUST BE MADE BY CHANGE ORDER AND HAVE THE SIGNATURE OF ALL PARTIES INVOLVED. THIS APPROVAL SUPERSEDES ALL OTHER PLANS AND SPECIFICATIONS.
THIS PRINT MUST BE SIGNED, DATED AND RETURNED TO ADVANCED MODULAR MANUFACTURING
1168 S. LEGACY VIEW ST. • SALT LAKE CITY, UTAH 84104

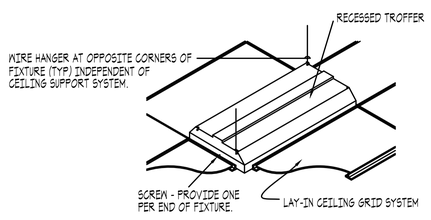

RECESSED FIXTURE MOUNTING DETAIL
-- SCALE: NONE --

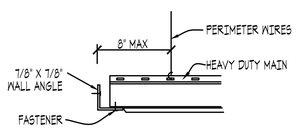

RIGID PERIMETER CONNECTION
-- SCALE: NONE --

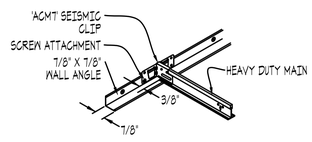

FREE-END PERIMETER CONNECTION
-- SCALE: NONE --

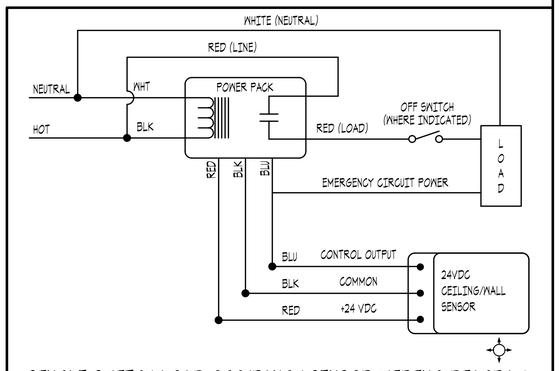

SINGLE SWITCH LOAD OCCUPANCY SENSOR WIRING DIAGRAM
-- SCALE: NONE --

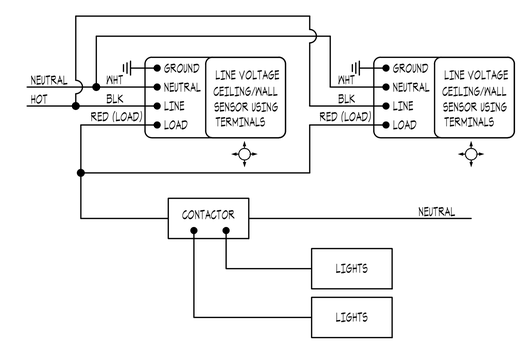

THREE-WAY SENSORS W/ TWO CIRCUITS DIAGRAM
-- SCALE: NONE --

REFLECTED CEILING SPECIFICATIONS

1. REFLECTED CEILING TO CODES LISTED ON SHEET 1 AND ASTM C635 AND C636.
2. TYPICAL 2' x 4' SUSPENDED T-GRID PATTERN.
3. 2' x 4' ACOUSTICAL CEILING TILES; 'CERTAINTEED' 'BAROQUE' #BET-141/EQ;
4. SUSPEND USG' #DX/DXL HEAVY DUTY TRACK W/ #12 GAUGE WIRE.
5. BRACE TRACK PER SEISMIC ZONE D2.
6. LIGHTS TO BE MECHANICALLY FASTENED TO T-GRID W/ SCREWS - PROVIDE ONE (1) PER END OF FIXTURE; & HAVE TWO (2) LIGHT WIRES INDEPENDANT OF T-GRID PROVIDE ONE (1) AT OPPOSITE CORNERS OF EACH LIGHT.
7. FINISH CEILING HEIGHT: 10'1" A.F.F.
8. 'ENVIROLITE' #EVTR24BL40PD; 2' x 4' (42W TOTAL) LED LAY-IN TROPHER (TOTAL: 26).
   ROYAL PACIFIC' #4336WH; 11" LED SURFACE MOUNT PAN LIGHT (15W TOTAL) W/ GLOBE (TOTAL: 2).
9. PORCH LIGHT:
   MORRIS', MODEL #71423 (30W) WALL MOUNT LED FIXTURE @ 84" A.F.F. W/ PHOTOCELL (TOTAL: 3).
10. EXIT SIGN:
    EXIT MORRIS' #13016 (2W); CEILING MOUNT, ELECTRIC ILLUMINATED W/ BATTERY BACK-UP & DIRECTIONAL ARROWS (TOTAL: 2).
11. EMERGENCY LIGHT:
    EVERG MORRIS' #13118 (1W); WALL MOUNT @ 80" A.F.F. 2-LIGHT W/ BATTERY BACK-UP (TOTAL: 4).
12. OCCUPANCY SENSORS:
    WATTSTOPPER' #CI-355; CEILING MOUNT, PIR SENSOR (TOTAL: 2);
    WATT STOPPER' #WS-250; PIR WALL SWITCH SENSOR @ 42" A.F.F. (COLOR: WHITE)
13. SWITCHES: .
    20-AMP TOGGLE TYPE @ 42" A.F.F. (COLOR: WHITE);
    20-AMP 3-WAY TOGGLE TYPE @ 42" A.F.F. (COLOR: WHITE);
14. - - - - - HIDDEN LINE DENOTES LIGHT SWITCHING.

CEILING GRID NOTES

1. A HEAVY DUTY T-BAR GRID SYSTEM SHALL BE USED.
2. THE WIDTH OF THE PERIMETER SUPPORTING CLOSURE ANGLE SHALL BE NOT LESS THAN 7/8 IN. IN EACH ORTHOGONAL HORIZONTAL DIRECTION. ONE END OF THE CEILING GRID SHALL BE ATTACHED TO THE CLOSURE ANGLE. THE OTHER END IN EACH HORIZONTAL DIRECTION SHALL HAVE A SEISMIC CLIP WITH A 3/8 IN. CLEARANCE FROM THE WALL
3. AND SHALL REST UPON AND BE FREE TO SLIDE ON A CLOSURE ANGLE.
4. FOR CEILING AREAS EXCEEDING 1000 ft^2 (92.9 m^2), HORIZONTAL RESTRAINT OF THE CEILING TO THE STRUCTURAL SYSTEM SHALL BE PROVIDED. PER DETAIL SHOWN BELOW.
5. FOR CEILING AREAS EXCEEDING 2500 ft^2 (232 m^2), A SEISMIC SEPARATION JOINT OR FULL HEIGHT PARTITION THAT BREAKS THE CEILING UP INTO AREAS NOT EXCEEDING 2500 ft^2 SHALL BE PROVIDED UNLESS STRUCTURAL ANALYSES ARE PERFORMED OF THE CEILING BRACING SYSTEM FOR THE PRESCRIBED SEISMIC FORCES WHICH DEMONSTRATE CEILING SYSTEM PENETRATIONS AND CLOSURE ANGLES PROVIDE SUFFICIENT CLEARANCE TO ACCOMMODATE THE ADDITIONAL MOVEMENT. EACH AREA SHALL BE PROVIDED WITH CLOSURE ANGLES IN ACCORDANCE WITH ITEM B AND HORIZONTAL RESTRAINTS OR BRACING IN ACCORDANCE WITH ITEM C.

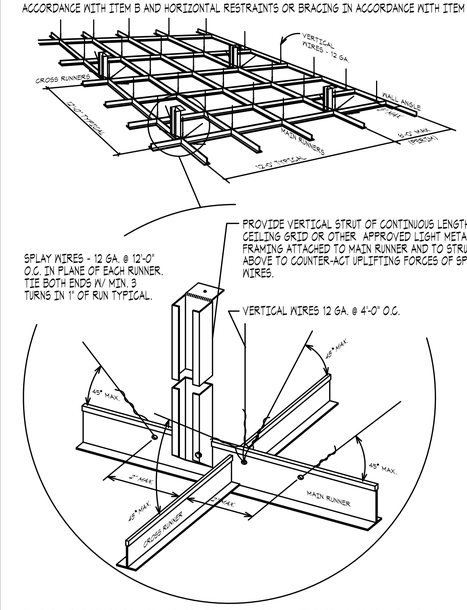

6. EXCEPT WHERE RIGID BRACES ARE USED TO LIMIT LATERAL DEFLECTIONS, SPRINKLER HEADS AND OTHER PENETRATIONS SHALL HAVE A 2 in. (50mm) OVERSIZE RING, SLEEVE, OR ADAPTER THROUGH THE CEILING TILE TO ALLOW FOR FREE MOVEMENT OF AT LEAST 1 IN. (25 mm) OF CEILING MOVEMENT IN ALL HORIZIONTAL DIRECTIONS ARE PERMITTED TO BE PROVIDED AT THE TOP OF THE SPRINKLER HEAD EXTENSION.
6. CHANGES IN CEILING PLAN ELEVATION SHALL BE PROVIDED WITH POSITIVE BRACING.
7. CABLE TRAYS AND ELECTRICAL CONDUITS SHALL BE SUPPORTED INDEPENDENTLY OF THE CEILING.
8. CEILING AREAS OF 144 SQ. ft. OR LESS SURROUNDED BY WALLS WHICH CONNECT DIRECTLY TO THE STRUCTURE ABOVE SHALL NOT REQUIRE THE DIAGONAL BRACING WIRES.
9. EACH VERTICAL WIRE SHALL BE ATTACHED EACH END WITH MIN. 3 TURNS.
10. CEILING GRID SHALL BE INSTALLED LEVEL TO WITHIN 1/8" IN 12 FEET.
11. LOCAL KINKS OR BENDS SHALL NOT BE MADE IN HANGER WIRES AS A MEANS OF LEVELING MAIN RUNNERS.
12. ALL WIRE LOOPS SHALL BE TIGHTLY WRAPPED AND SHARPLY BENT.15. INTEGRAL
13. CEILING/SPRINKLER CONSTRUCTION - IF APPLICABLE..
    AS AN ALTERNATIVE TO PROVIDING LARGE CLEARANCES AROUND SPRINKLER SYSTEM PENETRATIONS THROUGH CEILING SYSTEMS, THE SPRINKLER SYSTEM AND CEILING GRID ARE PERMITTED TO BE DESIGNED AND TIED TOGETHER AS AN INTEGRAL UNIT. SUCH A DESIGN SHALL CONSIDER THE MASS AND FLEXIBILITY OF ALL ELEMENTS INVOLVED, INCLUDING: CEILING SYSTEM, SPRINKLER APPURTENANSCES. THE DESIGN SHALL BE PERFORMED BY A REGISTERED DESIGN PROFESSIONAL.
14. CEILING MOUNTED LIGHT FIXTURES
    ALL CEILING MOUNTED LIGHT FIXTURES SHALL BE ATTACHED TO SUSPENDED CEILING GRID. IN ADDITION 12 GA. HANGER WIRES SHALL BE ATTACHED AT OPPOSITE CORNERS TO THE GRID WITHIN 3' OF EACH CORNER OF THE FIXTURE. TWO ADDITIONAL WIRES SHALL BE CONNECTED TO THE LIGHT HOUSING AND TO THE STRUCTURE ABOVE (THESE WIRES MAY BE SLACK). WIRES SHALL NOT ATTACH TO OR BEND AROUND INTERFERING MATERIAL OR EQUIPMENT, NOR SHALL THEY BE CLOSER THAN 6" FROM ANY UN-BRACED HORIZONTAL PIPING OR DUCTWORK. A TRAPEZE OR SIMILAR DEVICE SHALL BE USED WHERE OBSTRUCTIONS OCCUR. IBC 1621.2.5.2.2 SEISMIC DESIGN CATEGORIES D, E, OR F

DATE	REVISIONS	
	(1)	

SHEET CONTENTS:
REFLECTED CEILING PLAN

PROJECT TITLE:
36' X 60'
GOLF CLUB AT FLYING HORSE
MODULAR OFFICE BUILDING
PRESENTED BY:
VESTA MODULAR, SOUTHFIELD MI.

ADVANCED MODULAR MANUFACTURING
1168 SOUTH LEGACY VIEW STREET
SALT LAKE CITY, UTAH 84104
PH. (801) 571-9841
FAX (801) 456-7699
DRAWN BY: THE GHOST
CHECKED BY: C.J.J.

DATE.
SEPTEMBER 30, 2020

SHEET
3 OF 7
VESTA3660GOLFCLUB

SCALE:
1/4" = 1'-0"

REFLECTED CEILING PLAN

NOTE:
BARD UNITS HAVE AN INTERNAL DISCONNECT BEHIND A MARKED ACCESS PANEL

NORTH ARROW FOR MANUFACTURING PURPOSES ONLY.

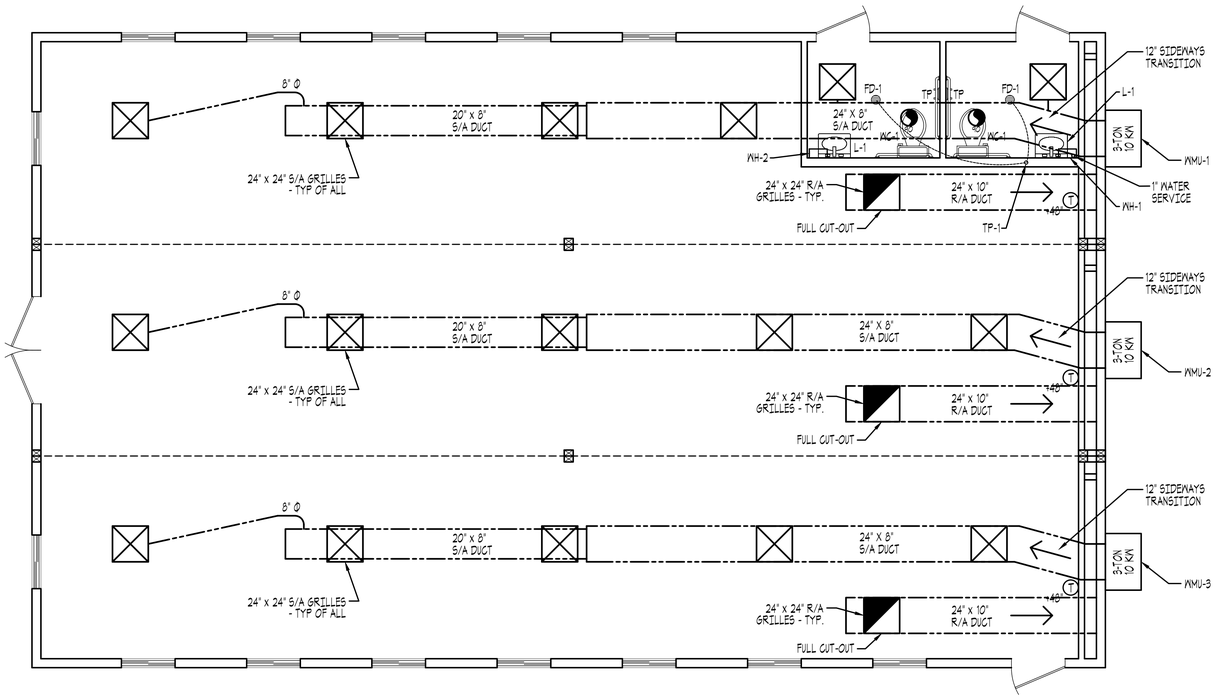

HITCH END

MECHANICAL SPECIFICATIONS

1. ALL MECHANICAL TO CODES NOTED ON SHEET 1.
2. HVAC UNIT: WMU-1, 2 & 3: 'BARD' #W36AB-A10XP4XXX; WALL MOUNT STYLE; 3 TON COOLING W/ 10 KW HEAT STRIPS (TOTAL: 3).
3. THERMOSTAT: (T) 'HONEYWELL' #TH6220D1002; 5-1-1 PROGRAMMABLE; MOUNT TOP @ 48" AFF. MAX. (TOTAL: 3).
4. SUPPLY AIR DUCT: 24" x 8" x 26-ga. GALVANIZED; 8" Ø GALVANIZED RUNS TO DIFFUSERS (U.N.O).
5. RETURN AIR DUCT: 24" x 10" x 26-ga. GALVANIZED; 12" Ø GALVANIZED TO R/A GRILLES (U.N.O.).
6. DIFFUSERS: ☒ 24" x 24" METAL LAY-IN 4-WAY STYLE W/ BUTTERFLY DAMPERS (TOTAL: 16).
7. RETURN AIR GRILLES: ◩ 24" x 24" METAL STYLE GRILLES IN T-GRID CEILING SYSTEM; DUCTED TO PLENUM WALL (TOTAL: 3).
8. EXHAUST FAN: 90 CFM 'AIRKING' #AK90L56/EQ (.3A 120v); 6" VENT THROUGH ROOF (TOTAL: 2).

PLUMBING SPECIFICATIONS

1. ALL PLUMBING TO COMPLY WITH CODES LISTED ON SHEET 1.
2. WASTE LINES: ABS-DWV SCHEDULE 40. 4" DRAIN LINE.
3. WATER LINES: PEX; RED = HOT; WHITE = COLD; NOTE: 1" TYPE 'M' COPPER W/ SWEAT FITTINGS SERVICE TO WH-1.
4. WATER CLOSET: WC-1: WESTERN POTTERY' ADA COMPLIANT, 18" HIGH ELONGATED BOWL, TANK STYLE W/ 1.28 GPF MAX. FLUSH & SPLIT SEAT (TOTAL: 2);
5. LAVATORY: L-1: 'KOHLER' 'KINGSTON' #K-2005; VITREOUS CHINA WALL HUNG STYLE; RIM HEIGHT PER ADA DETAIL - THIS SHEET (TOTAL: 2); FAUCET: 'AMERICAN STANDARD' 'MONTERREY' #7500.175; 0.5 GPM W/ DUAL WRIST BLADE HANDLES (TOTAL: 2).
6. WATER HEATERS: WH-1 & WH-2: 'EEMAX' #SP3512; (120V 3500W); LOCATED AS SHOWN (TOTAL: 2).
7. FLOOR DRAINS: FD-1: 'WATTS' #FD-100-FC; ROUND NICKEL BRONZE W/ 2" DRAIN, PROVIDE TRAP PRIMERS (TOTAL: 2).
8. TRAP PRIMER: TP-1: DUAL PORT STYLE W/ ACCESS COVER ON WALL (TOTAL: 1).
9. ACCESSORIES: GRAB BARS: 'PAMEX' #BGB39-XXXX; ONE (1) EACH 42", 36", AND 18" WHERE SHOWN, SEE ADA RESTROOM ELEVATIONS THIS SHEET (TOTAL: 2 EACH SIZE); MIRROR: 'BRADLEY' #781; 24" X 36" STAINLESS FRAMED; MOUNT ONE (1) ABOVE EACH LAVATORY (TOTAL: 2); TOILET PAPER HOLDER: 'BRADLEY' #5054; ONE (1) SINGLE ROLL HOLDER BY EACH WATER CLOSET, SEE DETAIL, THIS PAGE (TOTAL: 2); ADA PIPING PROTECTION: ONE KIT PER LAVATORY (TOTAL: 2).

NOTE: ANY AND ALL ADDITIONAL ACCESSORIES TO BE PROVIDED AND INSTALLED ON SITE BY OTHERS.

CUSTOMER APPROVAL

☐ APPROVED
☐ APPROVED EXCEPT AS NOTED
☐ REVISE AS NOTED AND RESUBMIT

APPROVAL BY_____ DATE _____

IT IS UNDERSTOOD THAT THIS APPROVAL REPRESENTS THE FINAL AGREEMENT BETWEEN ALL PARTIES AS TO PROJECT SPECIFICATIONS AND METHODS OF CONSTRUCTION. ANY MODIFICATION TO THESE PLANS MUST BE MADE BY CHANGE ORDER AND HAVE THE SIGNATURE OF ALL PARTIES INVOLVED. THIS APPROVAL SUPERSEDES ALL OTHER PLANS AND SPECIFICATIONS.
THIS PRINT MUST BE SIGNED, DATED AND RETURNED TO ADVANCED MODULAR MANUFACTURING
1168 S. LEGACY VIEW ST. • SALT LAKE CITY, UTAH 84104

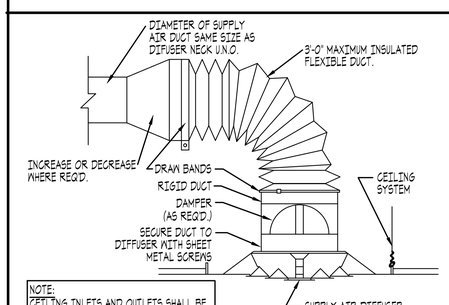

NOTE:
CEILING INLETS AND OUTLETS SHALL BE INDEPENDENTLY SUPPORTED.

SCALE: NONE — SUPPLY AIR DIFFUSER DUCT

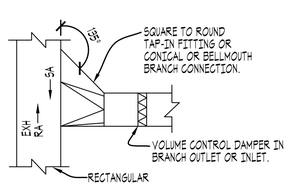

SCALE: NONE — TYP. LOW PRESSURE BRANCH DUCT

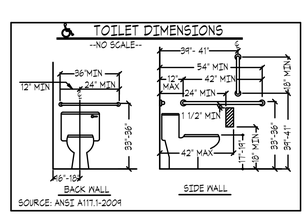

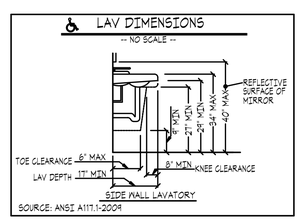

SCALE: 1/4" = 1'-0"

MECHANICAL/PLUMBING PLAN

REVISIONS	DATE
(1)	-

SHEET CONTENTS: MECHANICAL/PLUMBING PLAN

PROJECT TITLE:
36' X 60'
GOLF CLUB AT FLYING HORSE
MODULAR OFFICE BUILDING
PRESENTED BY:
VESTA MODULAR, SOUTHFIELD MI.

ADVANCED MODULAR MANUFACTURING
1168 SOUTH LEGACY VIEW STREET
SALT LAKE CITY UTAH 84104
PH. (801) 571-9841
FAX (801) 456-7699
DRAWN BY: THE GHOST
CHECKED BY: C.J.J.

DATE.
SEPTEMBER 30, 2020

SHEET 4 OF 7

VESTA3660GOLFCLUB

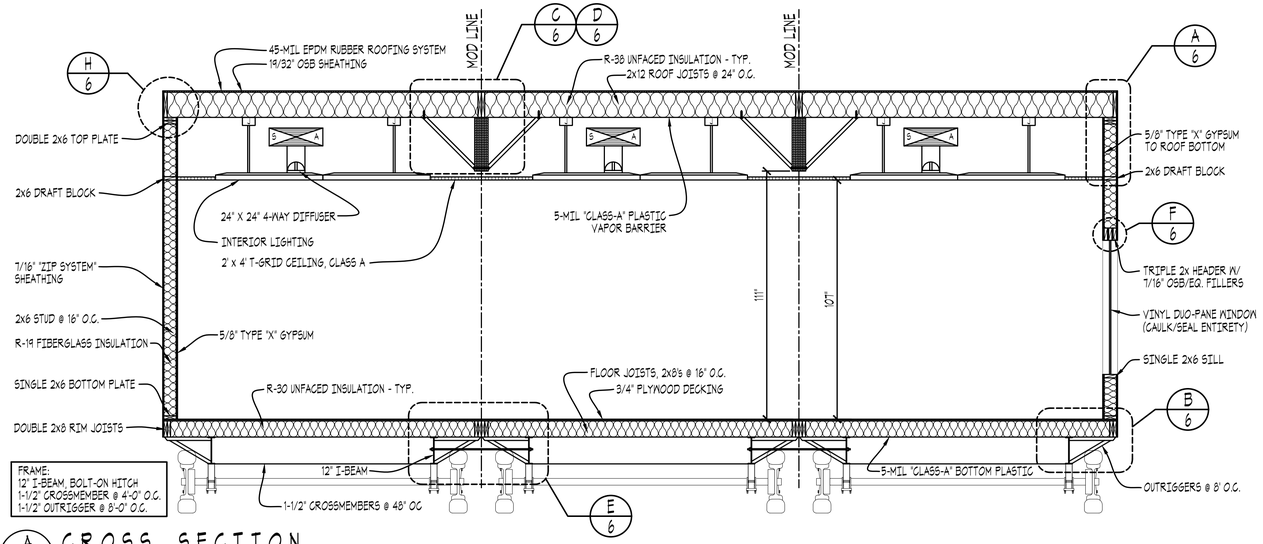

A 5 CROSS SECTION

SCALE: NONE

FASTENING SCHEDULE		
CONNECTION	FASTENING	SPACING
FLOORS		
1. FLOOR JOIST TO FRAME.	3/8" X 3" LAG SCREW.	32" OC.
2. RIM JOIST TO FLOOR JOIST.	4 EACH 16d NAIL	16" OC.
3. DBL. RIM JOIST TO FLOOR JOIST.	4 EACH 16d NAIL	16" OC.
4. 5-MIL CLASS "A" VAPOR BARRIER.	1-1/2" X 16-GAUGE STAPLE.	8" OC.
5. FLOOR DECK TO FLOOR JOIST.	GLUED & SCREWED W/ #8 SCREWS	10" OC. FIELD. 6" OC. EDGES.
WALLS		
1. BOTTOM PLATE TO FLOOR.	3 EACH 16d NAIL.	16" OC.
2. STUD TO BOTTOM PLATE.	16d NAIL: EXT.: 3 EA.; INT.: 2 EA.	
3. TOP PLATE TO STUD.	16d NAIL: EXT.: 3 EA.; INT.: 2 EA.	
4. DOUBLE TOP PLATE TO STUD.	2 EACH 16d NAIL.	16" OC.
5. TOP PLATE; LAP & INTERSECTION.	16d NAIL: EXT.: 3 EA.; INT.: 2 EA.	
6. HEADER W/ FILLER.	2 EACH 16d NAIL.	16" OC. EDGES.
7. SILL TO STUD.	2 EACH 16d NAIL.	
8. STUD TO HEADER.	EXT: 3 EA. 16d NAIL/EACH 2x6. INT: 2 EA. 16d NAIL/EACH 2x4.	
9. SILL TO STUD.	EXT: 3 EACH 16d NAIL. INT: 2 EACH 16d NAIL.	
10. INTERIOR SHEATHING TO STUD.	N/A.	
11. INTERIOR PANEL TO STUD.	1-1/2" DRYWALL NAILS. CONSTRUCTION ADHESIVE	6" OC. EDGES. FIELD.
12. EXTERIOR SHEATHING TO STUD.	8d GALVANIZED NAILS.	12" OC. FIELD. 6" OC. EDGES.
13. EXTERIOR SIDING TO STUD.	N/A.	
14. 1X TRIM TO EXTERIOR SIDING.	N/A.	
15. WALL TIE-IN TO FLOOR.	EXTERIOR SHEATHING	PER MFG. SPECS
16. INTERIOR TRIM.	4d FINISH NAILS.	8" OC. FIELD.
ROOF		
1. RIM JOIST TO TOP PLATE.	16d TOE-NAIL.	6" OC.
2. RIM JOISTS TO ROOF JOIST.	5 EACH 16d NAIL.	24" OC.
3. CEILING TO ROOF JOIST.	#12 WIRE W/ LAG FASTENER.	AS PER 2018 IBC.
4. ROOF SHEATHING TO ROOF JOIST.	10d NAIL.	10" OC. FIELD 6" OC. EDGES.
5. ROOFING UNDERLAYMENT.	N/A.	
6. ROOFING TO ROOF.	COMPATIBILE W/ ROOFING.	PER MFG. SPECS
7. WALL TIE-IN TO ROOF.	EXTERIOR SHEATHING	
8. ROOF CAP TO ROOF @ MODULE LINE.	COMPATIBLE W/ ROOFING.	CONTINUOUS

STRUCTURAL NOTES:

1. ROOF JOISTS: 2x12's; DFL #2/BETTER; PLACE @ 24" O.C; USE 2x RIM JOINTS.
2. STRUCTURAL LUMBER REQUIRED;
   A. FLOOR JOISTS: 2x8 (DFL #2/BETTER) @ 16" O.C.
   B. WALL STUDS: EXT: 2x6 SPF STUD GRADE; INT: 2X4 SPF STUD GRADE; U.N.O.
   ADDITIONAL 2x'S: SPF #2/BETTER.
   ALL SHEATHING: APA RATED.
   C. FLOOR DECKING: 3/4" T&G PLYWOOD; 24" MINIMUM SPAN INDEX; APA RATED; GLUED AND SCREWED.
   D. WALL SHEATHING: 7/16" APA RATED "ZIP SYSTEM"
   E. ROOF SHEATHING: 19/32" APA RATED OSB/EQUAL W/ 24" SPAN INDEX.
3. STRUCTURAL MEMBERS CANNOT BE RIPPED OR ALTERED W/ OUT PRIOR APPROVAL FROM ENGINEER ON RECORD.

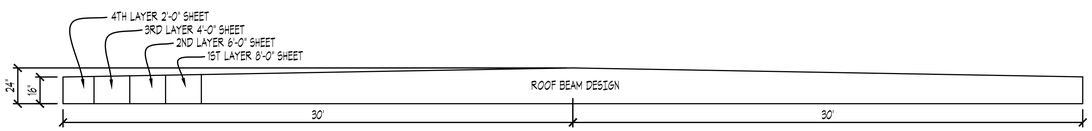

B 5 ROOF BEAM DESIGN

SCALE: NONE

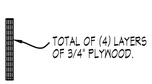

NOTE: GROUP I STRUCTURAL PLYWOOD (DOUG FIR 5-PLY) MUST BE USED!!

BEAM ASSEMBLY:

1. CUT PLYWOOD TO DIMENSIONS NEEDED.
2. OFFSET SPLICES AT LEAST 24"
3. ARRANGE 1ST LAYER ON ASSEMBLY TABLE.
4. APPLY APA SPEC. AFG-01 WOOD ASSEMBLY GLUE TO MATING SURFACES OF TWO(2) LAYERS OF 3/4" PLYWOOD.
5. APPLY #16 GA. X 1-1/2" LG X 7/16" CROWN STAPLES TO CONNECT (2) LAYERS TOGETHER. USE A MINIMUM OF 25 STAPLES PER FOOT TO A MAXIMUM OF 35 STAPLES PER FOOT AT EACH LAYER CONNECTION.
6. APPLY APA SPEC. AFG-01 WOOD ASSEMBLY GLUE TO MATING SURFACES OF LAYERS 2 & 3 OF 3/4" PLYWOOD.
7. STAPLE AS NOTED IN (5) ABOVE.
8. (IF APPLICABLE) APPLY APA SPEC. AFG-01 WOOD ASSEMBLY GLUE TO LAYERS 3 & 4 AS NOTED IN (4) AND (6) ABOVE.
9. STAPLE AS NOTED IN (5) ABOVE.
10. TURN BEAM OVER AND STAPLE FIRST SIDE TO OTHER ASSEMBLED BEAM AS NOTED IN (5) ABOVE.
11. DO NOT INSTALL BEAM UNTIL ADHESIVE HAS SET (SEE MFGR'S INSTRUCTIONS).

C 5 BEAM CROSS SECTION

SCALE: NONE

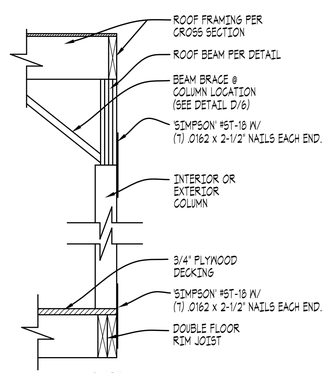

D 5 COLUMN INSTALLATION DETAIL

SCALE: NONE

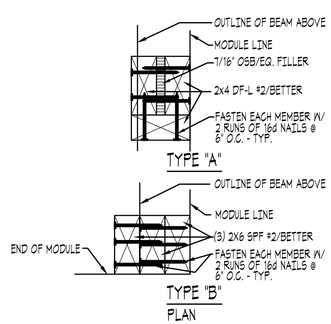

E 5 COLUMN (POST) DETAILS

SCALE: NONE

CUSTOMER APPROVAL

☐ APPROVED
☐ APPROVED EXCEPT AS NOTED
☐ REVISE AS NOTED AND RESUBMIT

APPROVAL BY_____ DATE _____

IT IS UNDERSTOOD THAT THIS APPROVAL REPRESENTS THE FINAL AGREEMENT BETWEEN ALL PARTIES AS TO PROJECT SPECIFICATIONS AND METHODS OF CONSTRUCTION. ANY MODIFICATION TO THESE PLANS MUST BE MADE BY CHANGE ORDER AND HAVE THE SIGNATURE OF ALL PARTIES INVOLVED. THIS APPROVAL SUPERSEDES ALL OTHER PLANS AND SPECIFICATIONS.

THIS PRINT MUST BE SIGNED, DATED AND RETURNED TO ADVANCED MODULAR MANUFACTURING
1166 S. LEGACY VIEW ST. • SALT LAKE CITY, UTAH 84104

SCALE: NONE

CROSS SECTIONS

REVISIONS	DATE
(1)	-

SHEET CONTENTS: CROSS SECTION

PROJECT TITLE: 36' X 60' GOLF CLUB AT FLYING HORSE MODULAR OFFICE BUILDING

PRESENTED BY: VESTA MODULAR, SOUTHFIELD MI.

ADVANCED MODULAR MANUFACTURING
1166 SOUTH LEGACY VIEW STREET
SALT LAKE CITY, UTAH 84104
PH. (801) 571-9841
FAX (801) 456-7699
DRAWN BY: THE GHOST
CHECKED BY: C.J.J.

DATE. SEPTEMBER 30, 2020

SHEET 5 OF 7

VESTA3660GOLFCLUB

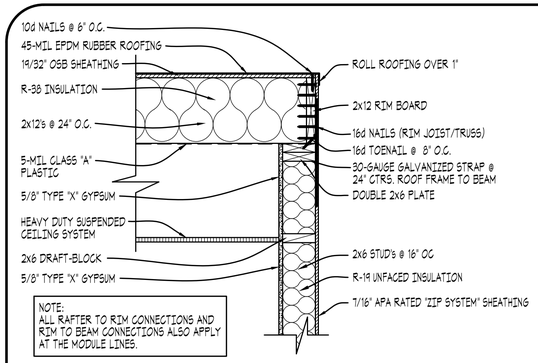

SCALE: NONE — (A) ROOF TO SIDEWALL DETAIL

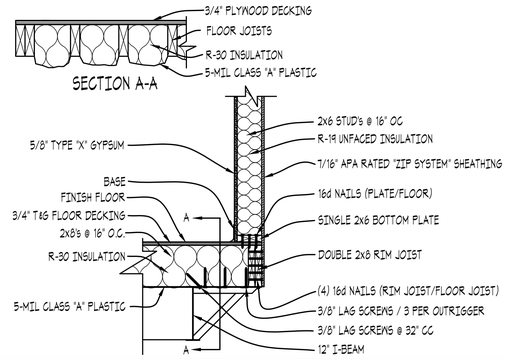

SCALE: NONE — (B) EXTERIOR WALL TO FLOOR DETAIL

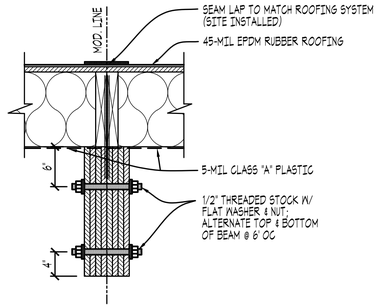

SCALE: NONE — (C) BEAM CONNECTION @ MOD LINES

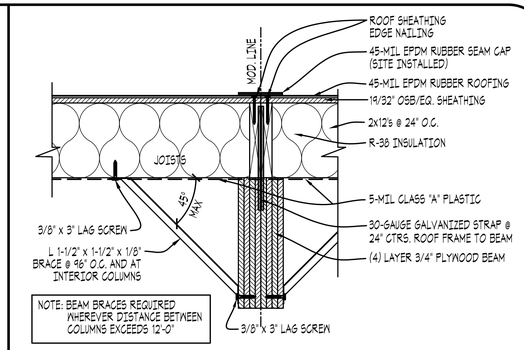

SCALE: NONE — (D) SUPPORT BEAM TO ROOF DETAIL

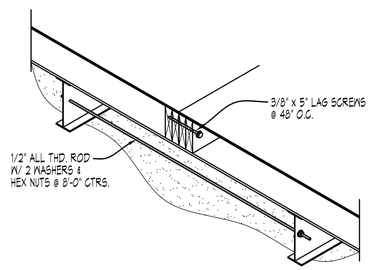

SCALE: NONE — (E) FLOOR/FRAME CONNECTION @ MOD LINES

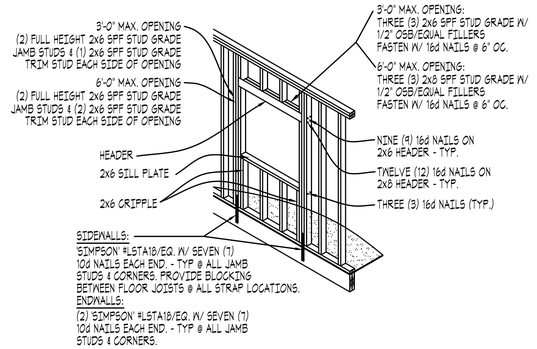

SCALE: NONE — (F) EXTERIOR WALLS HEADER DETAIL

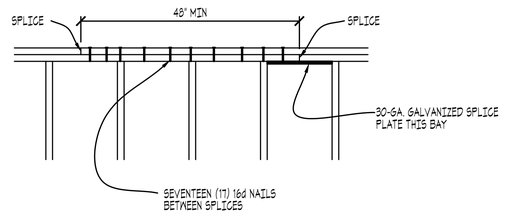

SCALE: NONE — (G) DOUBLE PLATE SPLICE DETAIL

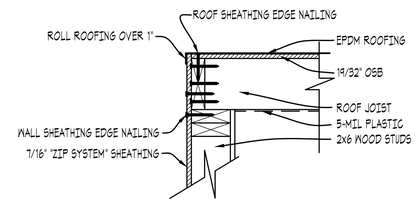

SCALE: NONE — (H) EPDM DETAIL

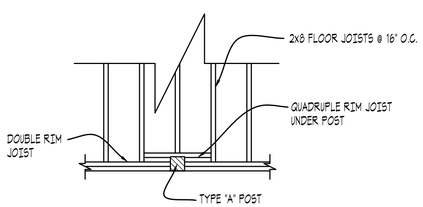

SCALE: NONE — (J) INT. COLUMN SUPPORT (TYP. EACH SIDE OF MOD LINE)

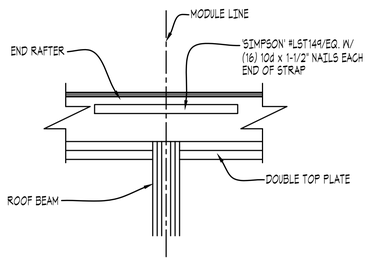

SCALE: NONE — (K) MODULE LINE ROOF STRAPS

CUSTOMER APPROVAL

☐ APPROVED
☐ APPROVED EXCEPT AS NOTED
☐ REVISE AS NOTED AND RESUBMIT

APPROVAL BY: _____ DATE _____

IT IS UNDERSTOOD THAT THIS APPROVAL REPRESENTS THE FINAL AGREEMENT BETWEEN ALL PARTIES AS TO PROJECT SPECIFICATIONS AND METHODS OF CONSTRUCTION. ANY MODIFICATION TO THESE PLANS MUST BE MADE BY CHANGE ORDER AND HAVE THE SIGNATURE OF ALL PARTIES INVOLVED. THIS APPROVAL SUPERSEDES ALL OTHER PLANS AND SPECIFICATIONS.

THIS PRINT MUST BE SIGNED, DATED AND RETURNED TO ADVANCED MODULAR MANUFACTURING
1168 S. LEGACY VIEW ST. • SALT LAKE CITY, UTAH 84104

SCALE: NONE — (L) DESCRIPTION

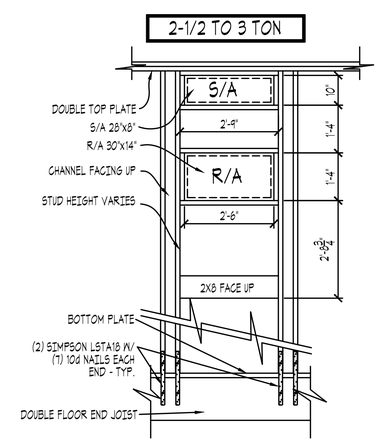

ELEVATION

SCALE: NONE — (Q) HVAC FRAMING DETAIL

SCALE: NONE — (M) DESCRIPTION

SCALE: NONE — (N) DESCRIPTION

SCALE: NONE — (P) DESCRIPTION

REVISIONS	DATE
(1)	-

SHEET CONTENTS: DETAILS

PROJECT TITLE:
36' X 60'
GOLF CLUB AT FLYING HORSE
MODULAR OFFICE BUILDING

PRESENTED BY:
VESTA MODULAR, SOUTHFIELD MI.

ADVANCED MODULAR MANUFACTURING
1168 SOUTH LEGACY VIEW STREET
SALT LAKE CITY, UTAH 84104
PH. (801) 571-9841
FAX (801) 456-7699

DRAWN BY: THE GHOST
CHECKED BY: C.J.J.

DATE.
SEPTEMBER 30, 2020

SHEET 6 OF 7

VESTA3660GOLFCLUB

NOTE:
SHIP HEIGHT DOES NOT INCLUDE VENT PIPES.

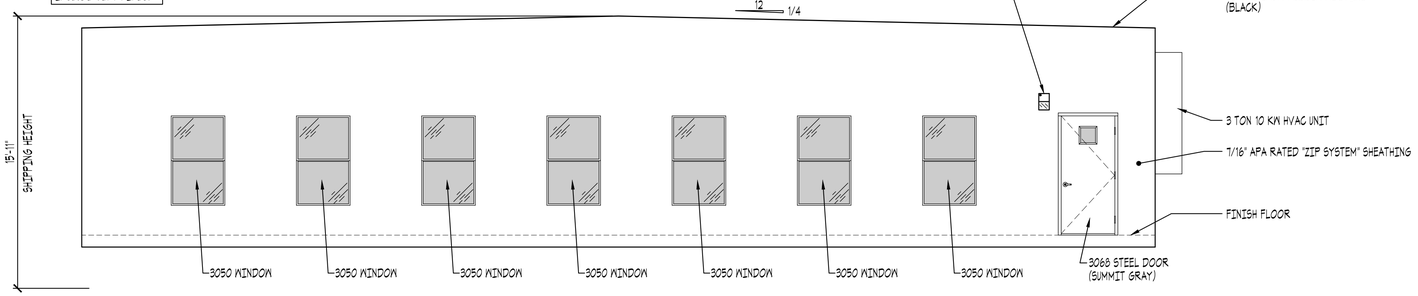

A/7 SOUTH EXTERIOR ELEVATION
SCALE: 1/4" = 1'-0"

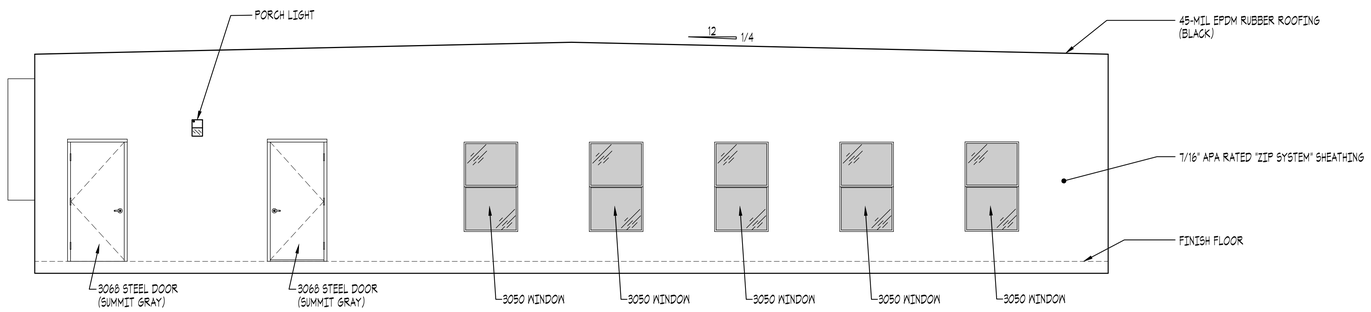

B/7 NORTH EXTERIOR ELEVATION
SCALE: 1/4" = 1'-0"

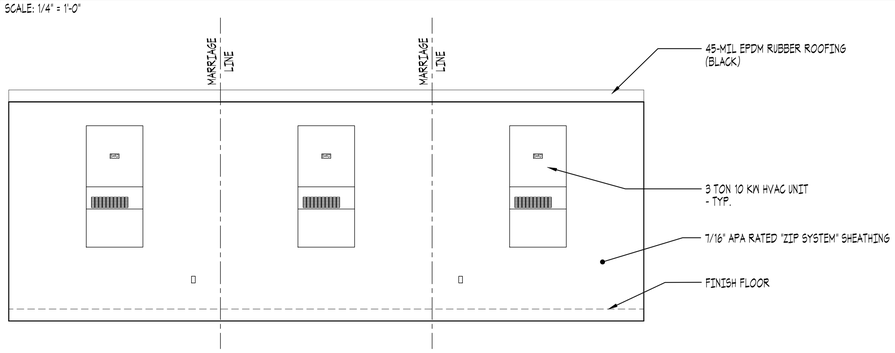

C/7 EAST EXTERIOR ELEVATION
SCALE: 1/4" = 1'-0"

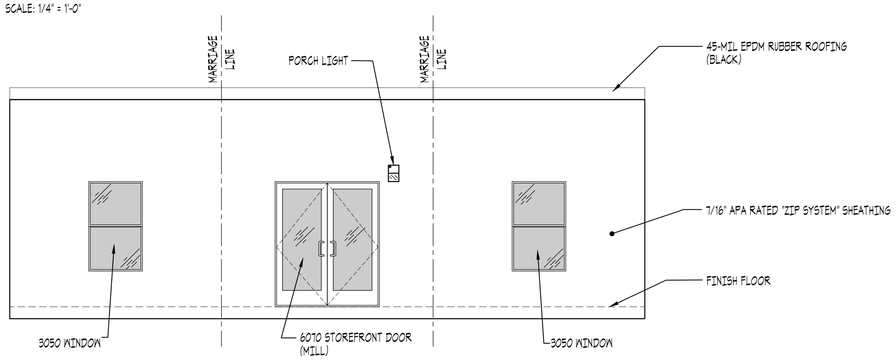

D/7 WEST EXTERIOR ELEVATION
SCALE: 1/4" = 1'-0"

CUSTOMER APPROVAL

☐ APPROVED
☐ APPROVED EXCEPT AS NOTED
☐ REVISE AS NOTED AND RESUBMIT

APPROVAL BY_____ DATE _____

IT IS UNDERSTOOD THAT THIS APPROVAL REPRESENTS THE FINAL AGREEMENT BETWEEN ALL PARTIES AS TO PROJECT SPECIFICATIONS AND METHODS OF CONSTRUCTION. ANY MODIFICATION TO THESE PLANS MUST BE MADE BY CHANGE ORDER AND HAVE THE SIGNATURE OF ALL PARTIES INVOLVED. THIS APPROVAL SUPERSEDES ALL OTHER PLANS AND SPECIFICATIONS.
THIS PRINT MUST BE SIGNED, DATED AND RETURNED TO ADVANCED MODULAR MANUFACTURING
1166 S. LEGACY VIEW ST. • SALT LAKE CITY, UTAH 84104

REVISIONS	DATE
(1)	-

SHEET CONTENTS:
EXTERIOR ELEVATIONS

PROJECT TITLE:
36' X 60'
GOLF CLUB AT FLYING HORSE
MODULAR OFFICE BUILDING

PRESENTED BY:
VESTA MODULAR, SOUTHFIELD MI.

ADVANCED MODULAR MANUFACTURING
1166 SOUTH LEGACY VIEW STREET
SALT LAKE CITY, UTAH 84104
PH. (801) 571-9841
FAX (801) 456-7699

DRAWN BY: THE GHOST
CHECKED BY: C.J.J.

DATE.
SEPTEMBER 30, 2020

SHEET
1 OF 1

VESTA3660GOLFCLUB

SCALE:
NOTED

EXTERIOR ELEVATIONS

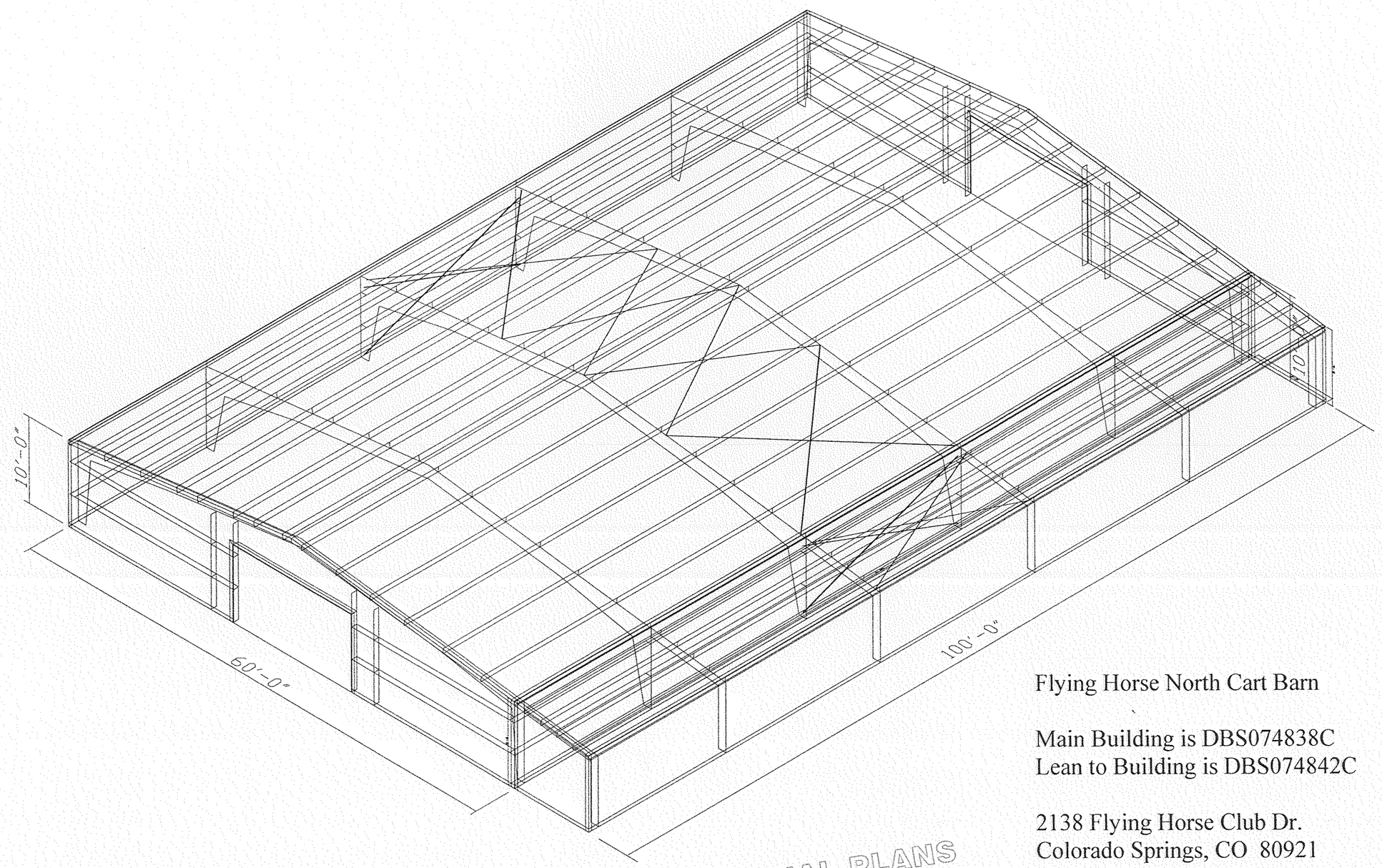

Flying Horse North Cart Barn

Main Building is DBS074838C
Lean to Building is DBS074842C

2138 Flying Horse Club Dr.
Colorado Springs, CO 80921

BUILDER/CONTRACTOR RESPONSIBILITIES

It is the responsibility of the BUILDER/CONTRACTOR to ensure that all project plans and specifications comply with the applicable requirements of any governing building authorities. The supplying of sealed engineering data and drawings for the metal building system does not imply or constitute an agreement that the building manufacturer or its design engineer is acting as the engineer of record or design professional for a construction project.

The contractor must secure all required approvals and permits from the appropriate agency as required.

Approval of drawings and calculations indicate that the building manufacturer correctly interpreted and applied the requirements of the contract drawings and specifications (Sect. 4.2.1 AISC code of standard practices, 9th. edition.)

Where discrepancies exist between the manufacturer's structural steel plans and the plans for other trades, the structural steel plans shall govern (Sect. 3.3 AISC code of standard practices 9th. ed).

Design considerations of any materials in the structure which are not furnished by the building manufacturer/supplier are the responsibility of the contractors and engineers other than the building manufacturer/supplier's engineer unless specifically indicated.

The contractor is responsible for all erection of steel and associated work in compliance with the building manufacturer's 'for construction' drawings.

Products shipped to builder or his customer shall be inspected immediately upon arrival. Claims for shortages or defective material if not packaged must be mailed to RapidsetBuildings.com in writing within five (5) days after the builder learns of the defect. The manufacturer/ RapidsetBuildings.com shall not be liable for any defect unless claim is made within one (1) year after date of the original shipment by the manufacturer to the builder or his customer. RapidsetBuildings.com will be given a reasonable opportunity to inspect defective materials upon receipt of claim by builder.

If a defect is of such nature that it can be remedied by a field operation at the job site without the necessity of returning the material to the manufacturer, then upon written authorization of the manufacturer the builder may repair or cause the material to be repaired and the manufacturer will reimburse the builder for the cost of the repair in accordance with the written authorization.

All bracing as shown and provided by the manufacturer for this building is required and shall be installed by the erector as a permanent part of the structure.

Temporary supports, such as temporary guys, braces, false work, cribbing or other elements required for the erection operation will be determined and furnished and installed by the erector. These temporary supports will secure the steel framing or any partly assembled steel framing against loads comparable in intensity to those for which the structure was designed, resulting from wind, seismic forces and erection operations, but not the loads resulting from the performance of work by or the acts of others, nor such unpredictable loads as those due to tornado, explosion or collision (Sect. 7.9.1 AISC code of standard practices, 9th. edition.)

Design of gutter and downspout is a function of the rainfall intensity and area to be drained. Design parameters utilized are in accordance with the 1986 low rise building system manual and/or the 9th edition of the architectural graphic standards, as applicable. Proper owner maintenance dictates that the drainage system be kept free and clear of debris and/or ice at all times to ensure proper function of the gutter and downspout. In those cases where the owner/tenant of a property is unwilling or unable to provide proper maintenance, elimination of gutter should be considered as an alternative.

APPROVAL NOTES

The following conditions may apply in the event that these drawings are used as approval drawings:

A). It is imperative that any changes to these drawings:
   1) Be made in contrasting ink and surrounded by 'clouding'.
   2) Have all instances of change clearly indicated.
   3) Be legible and unambiguous.

B). Dated signature is required on all pages.

C). RapidsetBuildings.com reserves the right to resubmit drawings with extensive or complex changes required to avoid misfabrication. This may impact the delivery schedule.

D). Any changes noted on the drawings not in conformance with the terms and requirements of the contract between RapidsetBuildings.com and its customer are not binding on RapidsetBuildings.com unless subsequently specifically acknowledged and agreed to in writing by change order or separate documentation. RapidsetBuildings.com recognizes that rubber stamps are routinely used for indicating approval, disapproval, rejection or mere review of the drawings submitted. However, RapidsetBuildings.com does not accept changes or additions to contractual terms and conditions that may appear with use of a stamp or similar indication of approval, disapproval, etc... Such language applied to the drawings of RapidsetBuildings.com by the customer, architect, engineer, or any other party will be considered as unacceptable alterations to these drawing notes, and will not alter the contractual rights and obligations existing between RapidsetBuildings.com and its customer.

Drawing Status:

- [ ] For Approval: these drawings, being for approval, are by definition not final, and are for conceptual representation only. Their purpose is to confirm proper interpretation of the project documents. Only drawings issued 'for construction' can be considered complete.
- [ ] For Permit: These drawings, being for permit, are by definition not final in that, as a minimum, piece markings are not identified. Only drawings issued 'for construction' can be considered as complete.
- [x] For Construction: Final Drawings.

GENERAL NOTES ◇ Rapidset Metal Buildings (TM)

The structure under this contract has been designed and detailed for the loads and conditions stipulated in the contract and shown on these drawings. Any alterations to the structural system or removal of any component parts, or the addition of other construction materials or loads must be done under the advice and direction of a registered architect, civil or structural engineer. The building manufacturer will assume no responsibility for any loads not indicated.

This metal building is designed with the building manufacturer's standard practices which are based on pertinent procedures and recommendations of the following organizations and codes.

1. American Institute of Steel Construction: 'Specification for the Design, Fabrication and Erection of Structural Steel for Buildings.'
2. American Iron and Steel Institute: 'Specification for the Design of Cold Formed Steel Structural Members'.
3. American Welding Society: 'Structural Welding Code' AWS D1.1.
4. Metal Building Manufacturer's Association: 'Low Rise Building Systems Manual'
5. International Conference of Building Officials: 'Uniform Building Code'
6. Southern Building Code Congress International: 'Standard Building Code'
7. Building Official and Code Administrators International: 'BOCA National Building Code'
8. National Building Code of Canada.
9. International Building Code

Material properties of steel plate used in the fabrication of primary rigid frames, and other primary structural exclusive of cold formed sections, conform to ASTM-A529 or A-572. Flanges with thickness of 1" or less and width of 12" or less conform to A-529 with a minimum yield point of 55,000 PSI. Web material conforms to ASTM-A36 modified with a minimum yield point of 46,000 PSI.

Material properties of pipe sections conform to ASTM-A53 type E, grade B with a minimum yield point of 35,000 PSI.

Material properties of hot rolled steel members conform to the requirements of ASTM-A36 or A572 with a minimum yield point of 50,000 PSI.

Material properties of cold formed light gage steel members conform to ASTM-A570 or A607 grade 55 modified with a minimum yield point of 57,000 PSI.

Material properties of roof/wall sheeting, base metal conform to ASTM-A792 grades D or E with minimum yield points of 50,000 PSI and 80,000 PSI respectively, as required by design. Coating of base material is 55% aluminum-zinc alloy in accordance with A755 specifications.

Cable utilized for bracing conforms to ASTM A475. Cable bracing is to be installed to a taut condition with all slack removed.

Rod and angle utilized for bracing members conform to ASTM A36.

Structural joints with A.S.T.M. A-325 high strength bolts, where indicated on the drawings, shall be assembled and the fasteners tightened in accordance with 'turn of nut' method as described in the specification for structural joints using A.S.T.M. A-325 or A-490 bolts (11-18-35), unless otherwise noted. All joints will be assembled without washers unless otherwise noted.

All steel members except bolts, fasteners and cable shall receive one shop coat of iron oxide corrosion inhibitive primer, meeting the performance requirements of TIP-636.

Shop and field inspections and associated fees are the responsibility of the contractor, unless stipulated otherwise in the contract.

The metal building manufacturers will identify primary structural steel with a minimum yield point greater than 36,000 PSI by means of a sticker near the erection mark on each shipped piece. Secondary members with a yield point equal to or greater than 33,000 PSI shall be identified by means of a sticker near the erection mark on each shipped piece. (This is in accordance with the 1997 UBC section 2203, subsection 2203.2 and 2203.3.)

PRIMER

Shop primer paint is a rust inhibitive primer which meets or exceeds the end performance of federal specifications TT-P-636c and TT-P-664 and is a red oxide primer. This primer is not intended for long term exposure to the elements. RapidsetBuildings.com is not responsible for any deterioration of the shop primer as a result of improper handling and/or storage. RapidsetBuildings.com shall not be responsible for any field-applied paint and/or coatings. (Section 6.5 AISC Code of Standard Practice, 9th ED.)

A325 BOLT TIGHTENING REQUIREMENTS

All high strength bolts are A325-N unless specifically noted otherwise. Structural bolts shall be tightened by the turn of nut method in accordance with the 9th edition of the 'AISC Steel Construction Manual'. A325 bolts are supplied without washers unless noted otherwise.
All bolted connections are designed as bearing type connections with the bolt threads included in the shear plane.

ERECTION NOTE: (ERECTION AND UNLOADING NOT BY RapidsetBuildings.com)

All bracing shown and provided by RapidsetBuildings.com for this building is required and shall be installed by the erector as a permanent part of the structure. If additional bracing is required for stability during erection, it shall be the erector's responsibility to determine the amount of such bracing and to procure and install as needed.

SHORTAGES (SEE MBMA 5.2.1)

The quantity of crates and structural items shipped shall be checked and any shortages or other discrepancies with respect thereto, shall be reported to RapidsetBuildings.com on the day of delivery and such discrepancy confirmed in writing within seven (7) days. With respect to items or quantities within unopened crates and any latent defects, it shall be the duty of the purchaser to notify RapidsetBuildings.com on the date such defect or shortage is discovered and confirm such notice in writing to RapidsetBuildings.com within (7) days thereof.

CORRECTIONS OF ERRORS AND REPAIRS (SEE MBMA 6.10)

Claims for correction of alleged misfits will be disallowed unless RapidsetBuildings.com shall have received prior notice thereof and allowed reasonable inspection of such misfits. The correction of minor misfits by use of drift pins to draw the components into line, moderate amounts of reaming, chipping and cutting, and the replacement of minor shortages of material are a normal part of erection and are not subject to claim, no part of the building may be returned for alleged misfits without the prior approval of RapidsetBuildings.com.

FIELD WORK SUMMARY

1. Walk doors and windows will need to be 'cut in.' Check for bracing on the plan before locations are determined.

2. For a pitched roof, the top of the panels on the rake side will need to be clipped in order for the rake trim to fit.

3. Slots will need to be cut in the appropriate girts to accommodate the cables or rods where such bracing will be used.

SAFETY◇Rapidset Metal Buildings (TM)

The building manufacturer/supplier has a commitment to manufacture quality building components that can be safely erected. However, the safety commitment and job site practices of the erector are beyond the control of the building manufacturer.

The supplier strongly recommends that safe working conditions and accident prevention practices be the top priority of any job site.

Local, state and federal safety and health standards (www.osha.gov) should always be followed to help insure worker safety.

Make certain all employees know the safest and most productive way of erecting a building. Emergency procedures should be known to all employees.

Daily meetings highlighting safety procedures are also recommended.

The use of hard hats, rubber sole shoes for roof work, proper equipment for handling material, and safety nets where applicable are recommended.

BUILDING DATA

WIDTH (ft)	60
LENGTH (ft)	100
EAVE HEIGHT (ft)	10
ROOF SLOPE (rise/12")	1.5:12
SIDEWALL BAY SPACING	1 at 18.5
LEFT ENDWALL BAY SP	1 at 19
RIGHT ENDWALL BAY SP	1 at 19
ROOF FRAMING	1 at 4.8178 along surface 2
ROOF PANEL TYPE	Classic Roof (PBR)
ROOF PANEL GAUGE	26 GA
INTERIOR FRAMING	1 rigid frame, clear span
WALL PANEL TYPE	Classic Wall (PBR)
WALL PANEL GAUGE	26 GA
DEAD LOAD (psf)	2.000
LIVE LOAD (psf)	20.00
REDUCTION ALLOWED	NO
ROOF SNOW LOAD(psf)	40
COLLATERAL LOAD (psf)	2
GOVERNING CODE	IBC 15
WIND SPEED (mph)	130
CLOSURE	Closed
WIND EXPOSURE	C
WIND IMPORTANCE	1.00
WALL GIRT, MAX. DEFL. L/span	90
ROOF PURLIN, L.L. DEFL. L/span	180
RIGID FRAME HORIZ. DEFL. H/span	60
SEISMIC ZONE/DESIGN CATEGORY	B
SEISMIC COEFF.	0.294
SEISMIC IMPORTANCE	1.00
SEISMIC USE GROUP	
SEISMIC Sds	CD
SEISMIC Sd1	Colorado Springs
ANCHOR BOLTS	BY OTHERS

DRAWING INDEX

ENGINEER STAMP

PROJECT

CUSTOMER	Flying Horse N Golf Barn
PROJECT	Flying Horse Barn
JOB ID	DBS074838C
PROJECT ADDRESS	2138 Flying Horse Club Dr. Colorado Springs, CO 80921
SIZE	60'-0" x 100'-0" x 10'-0"

RapidsetBuildings.com

3555 N Prospect St. 800.793.8555
Colorado Springs CO 80907

DRAWINGS COVER SHEET (C1) NBS

SCALE: NONE | DATE: 11/27/20 | REV NO.

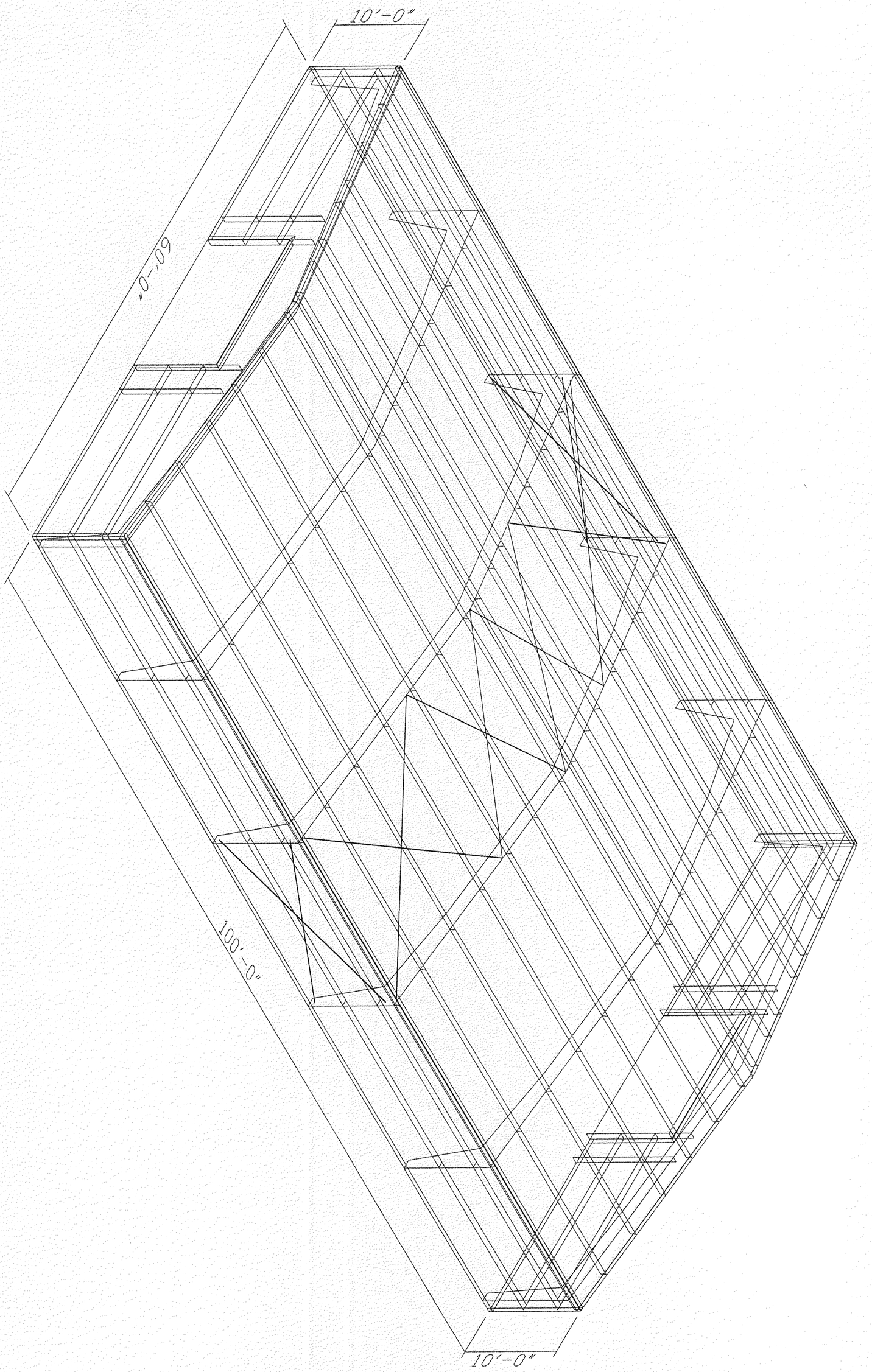
10'-0"
60'-0"
100'-0"
10'-0"

ANCHOR BOLT SUMMARY

Qty	Locate	Dia (in)	Type	Proj (in)
○ 8	Jamb	1/2"	F1554	3.00
⊠ 16	Endwall	3/4"	F1554	3.00
⊠ 16	Frame	3/4"	F1554	3.00
⊕ 32	Frame	1"	F1554	3.00

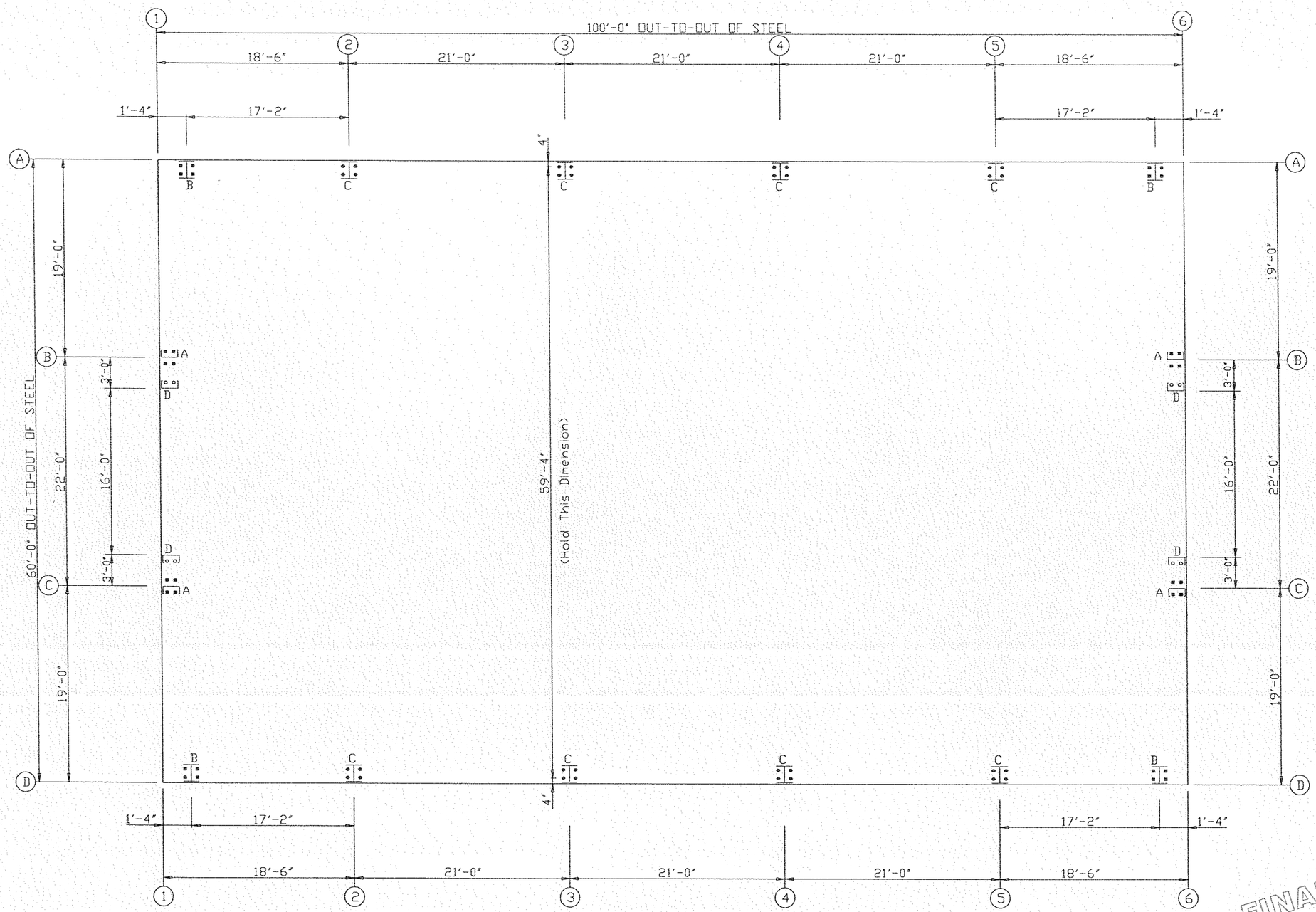

ANCHOR BOLT PLAN

NOTE: All Base Plates @ 100'-0" (U.N.)

FINAL PLANS
FOR CONSTRUCTION USE

○ Dia= 1/2"

⊠ Dia= 3/4"

⊕ Dia=1"

THIS DRAWING IS NOT TO SCALE

Flying Horse N Golf Barn		RapidsetBuildings.com	
PROJECT	Flying Horse Barn	PHONE: 800.793.8555	
ID	DBS074838C	ANCHOR BOLT PLAN & REACTIONS	
PROJECT ADDRESS	2138 Flying Horse Club Dr. Colorado Springs, CO 80921	DESIGN: Designer	NBS
		DATE: 11/27/20 SHEET 1	OF 20

Dia= 3/4"

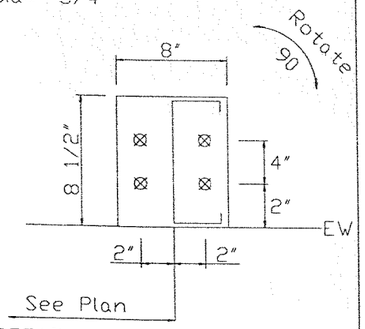

DETAIL A

Dia= 3/4"

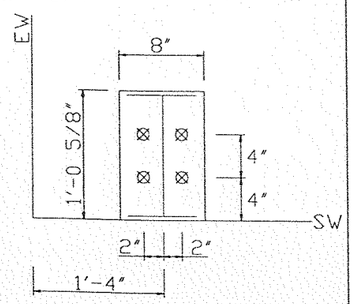

DETAIL B

Dia= 1"

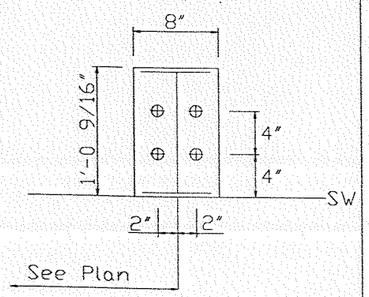

DETAIL C

Dia= 1/2"

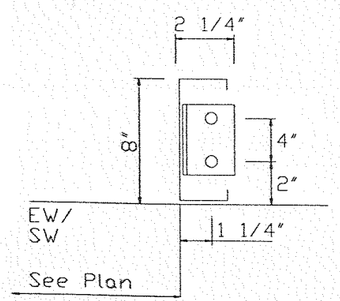

DETAIL D

THIS DRAWING IS NOT TO SCALE

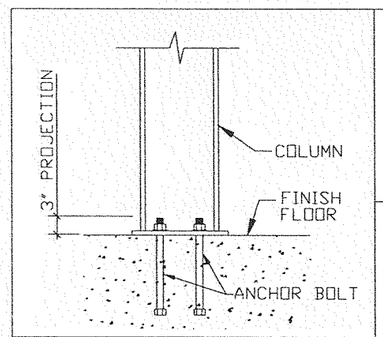

TYPICAL COLUMN BASE PLATE DETAIL

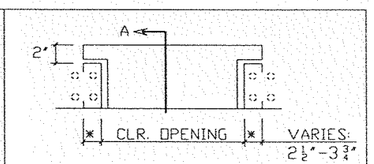

(USE (2) 1/2" DIA EXPANSION BOLTS PER COLUMN)

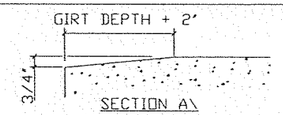

(RECOMMENDED)
TYPICAL OVERHEAD DOOR FRAMED OPENING

Flying Horse N Golf Barn		RapidsetBuildings.com	
PROJECT	Flying Horse Barn	PHONE: 800.793.8555	
ID	DBS074838C	ANCHOR BOLT DETAILS	
PROJECT ADDRESS	2138 Flying Horse Club Dr. Colorado Springs, CO 80921	DESIGN: Designer	NBS
		DATE: 11/27/20	SHEET 2 OF 20

FRAME LINES: 1 2 3 4 5 6

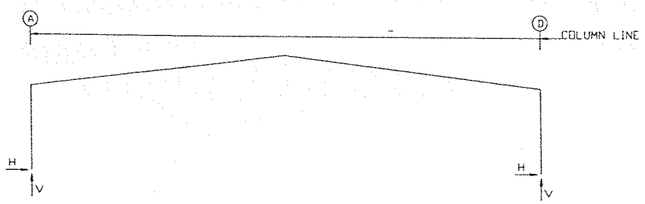

RIGID FRAME: MAXIMUM REACTIONS

Frm Line	Col Line	Column_Reactions(k) Load Id	Hmax H	V Vmax	Load Id	Hmin H	V Vmin
1	A	1	14.7	14.4	2	-5.2	-5.1
		1	14.7	14.4	5	-3.9	-5.2
1	D	3	4.9	-5.7	1	-14.3	16.2
		1	-14.3	16.2	7	3.5	-5.8

RIGID FRAME: MAXIMUM REACTIONS

Frm Line	Col Line	Column_Reactions(k) Load Id	Hmax H	V Vmax	Load Id	Hmin H	V Vmin
2*	A	1	30.9	30.2	2	-8.6	-8.4
					4	-6.3	-9.3
2*	D	3	8.0	-9.6	1	-30.2	34.0
		1	-30.2	34.0	6	5.8	-10.4

2* Frame lines: 2 3 4 5

RIGID FRAME: MAXIMUM REACTIONS

Frm Line	Col Line	Column_Reactions(k) Load Id	Hmax H	V Vmax	Load Id	Hmin H	V Vmin
6	A	1	14.7	14.4	2	-5.2	-5.1
		1	14.7	14.4	5	-3.9	-5.2
6	D	3	4.9	-5.7	1	-14.3	16.2
		1	-14.3	16.2	7	3.5	-5.8

NOTES FOR REACTIONS

1. All loading conditions are examined and only maximum/minimum H or V and the corresponding H or V are reported.
2. Positive reactions are as shown in the sketch. Foundation loads are in opposite directions.
3. Bracing reactions are in the plane of the brace with the H pointing away from the braced bay. The vertical reaction is downward.
4. Building reactions are based on the following building data:

Width (ft)	=	60.0
Length (ft)	=	100.0
Eave Height (ft)	=	10.0/ 10.0
Roof Slope (rise/12)	=	1.5/ 1.5
Dead Load (psf)	=	2.0
Collateral Load (psf)	=	2.0
Live Load (psf)	=	20.0
Snow Load (psf)	=	40.0
Wind Speed (mph)	=	130.0
Wind Code	=	IBC 15
Exposure	=	C
Closed/Open	=	C
Importance Wind	=	1.00
Importance Seismic	=	1.00
Seismic Zone	=	B
Seismic Coeff (Fa*Ss)	=	0.29

5. Loading conditions are:
   1 Dead+Collateral+Snow
   2 0.6Dead+0.6Wind_Left1
   3 0.6Dead+0.6Wind_Right1
   4 0.6Dead+0.6Wind_Long1L
   5 0.6Dead+0.6Wind_Long1R
   6 0.6Dead+0.6Wind_Long2L
   7 0.6Dead+0.6Wind_Long2R
   8 0.6Dead+0.6Wind_Right2+0.6Wind_Suction
   9 0.6Dead+0.6Wind_Pressure+0.6Wind_Long2L
   10 Dead+0.6Wind_Right2+0.6Wind_Suction

RIGID FRAME: BASIC COLUMN REACTIONS (k)

Frame Line	Column Line	Dead Horiz	Dead Vert	Collateral Horiz	Collateral Vert	Live Horiz	Live Vert	Snow Horiz	Snow Vert	Wind_Left1 Horiz	Wind_Left1 Vert	Wind_Right1 Horiz	Wind_Right1 Vert
1	A	1.1	1.3	0.6	0.6	6.5	6.3	12.9	12.5	-9.7	-9.8	-7.0	-7.3
1	D	-1.1	1.4	-0.6	0.7	-6.3	7.1	-12.6	14.2	6.5	-7.8	9.2	-10.9

Frame Line	Column Line	Wind_Left2 Horiz	Wind_Left2 Vert	Wind_Right2 Horiz	Wind_Right2 Vert	Wind_Long1 Horiz	Wind_Long1 Vert	Wind_Long2 Horiz	Wind_Long2 Vert	Seismic_Left Horiz	Seismic_Left Vert	Seismic_Right Horiz	Seismic_Right Vert
1	A	-6.8	-6.3	-4.1	-3.7	-7.7	-9.9	-8.3	-7.8	-0.3	-0.1	0.3	0.1
1	D	3.6	-4.8	6.3	-6.9	7.6	-8.9	7.0	-11.0	-0.3	0.1	0.3	-0.1

Frame Line	Column Line	F1UNB_SL_L- Horiz	F1UNB_SL_L- Vert	F1UNB_SL_R- Horiz	F1UNB_SL_R- Vert
1	A	10.5	12.3	10.0	6.8
1	D	-10.5	7.0	-10.0	11.7

Frame Line	Column Line	Dead Horiz	Dead Vert	Collateral Horiz	Collateral Vert	Live Horiz	Live Vert	Snow Horiz	Snow Vert	Wind_Left1 Horiz	Wind_Left1 Vert	Wind_Right1 Horiz	Wind_Right1 Vert
2*	A	2.1	2.3	1.4	1.3	13.7	13.3	27.4	26.5	-16.4	-16.3	-12.0	-12.7
2*	D	-2.1	2.6	-1.4	1.4	-13.4	15.0	-26.7	30.0	11.0	-13.8	15.4	-18.6

Frame Line	Column Line	Wind_Left2 Horiz	Wind_Left2 Vert	Wind_Right2 Horiz	Wind_Right2 Vert	Wind_Long1 Horiz	Wind_Long1 Vert	Wind_Long2 Horiz	Wind_Long2 Vert	Seismic_Left Horiz	Seismic_Left Vert	Seismic_Right Horiz	Seismic_Right Vert
2*	A	-10.2	-8.9	-5.8	-5.2	-12.6	-17.9	-13.4	-14.9	-0.7	-0.2	0.7	0.2
2*	D	4.8	-7.4	9.2	-10.2	12.5	-16.8	11.7	-19.8	-0.7	0.2	0.7	-0.2

Frame Line	Column Line	Seismic_Long Horiz	Seismic_Long Vert	F2UNB_SL_L- Horiz	F2UNB_SL_L- Vert	F2UNB_SL_R- Horiz	F2UNB_SL_R- Vert
2*	A	0.0	-1.1	22.2	26.1	21.1	14.3
2*	D	0.0	-1.2	-22.2	14.8	-21.1	24.8

Frame Line	Column Line	Dead Horiz	Dead Vert	Collateral Horiz	Collateral Vert	Live Horiz	Live Vert	Snow Horiz	Snow Vert	Wind_Left1 Horiz	Wind_Left1 Vert	Wind_Right1 Horiz	Wind_Right1 Vert
6	A	1.1	1.3	0.6	0.6	6.5	6.3	12.9	12.5	-9.7	-9.8	-7.0	-7.3
6	D	-1.1	1.4	-0.6	0.7	-6.3	7.1	-12.6	14.2	6.5	-7.8	9.2	-10.9

Frame Line	Column Line	Wind_Left2 Horiz	Wind_Left2 Vert	Wind_Right2 Horiz	Wind_Right2 Vert	Wind_Long1 Horiz	Wind_Long1 Vert	Wind_Long2 Horiz	Wind_Long2 Vert	Seismic_Left Horiz	Seismic_Left Vert	Seismic_Right Horiz	Seismic_Right Vert
6	A	-6.8	-6.3	-4.1	-3.7	-7.7	-9.9	-8.3	-7.8	-0.3	-0.1	0.3	0.1
6	D	3.6	-4.8	6.3	-6.9	7.6	-8.9	7.0	-11.0	-0.3	0.1	0.3	-0.1

Frame Line	Column Line	F3UNB_SL_L- Horiz	F3UNB_SL_L- Vert	F3UNB_SL_R- Horiz	F3UNB_SL_R- Vert
6	A	10.5	12.3	10.0	6.8
6	D	-10.5	7.0	-10.0	11.7

2* Frame lines: 2 3 4 5

ENDWALL COLUMN: BASIC COLUMN REACTIONS (k)

Frm Line	Col Line	Dead Vert	Wind Press Horz	Wind Suct Horz
1	B	0.1	-3.4	3.7
1	C	0.1	-3.4	3.7
6	C	0.1	-3.4	3.7
6	B	0.1	-3.4	3.7

ENDWALL COLUMN: MAXIMUM REACTIONS

Frm Line	Col Line	Column_Reactions(k) Load Id	Hmax H	V Vmax	Load Id	Hmin H	V Vmin
1	B	8	2.2	0.0	9	-2.0	0.0
		10	2.2	0.1			
1	C	8	2.2	0.0	9	-2.0	0.0
		10	2.2	0.1			
6	C	8	2.2	0.0	9	-2.0	0.0
		10	2.2	0.1			
6	B	8	2.2	0.0	9	-2.0	0.0
		10	2.2	0.1			

GENERAL NOTES

1. ALL LOADING CONDITIONS ARE EXAMINED AND ONLY MAXIMUM/MINIMUM H OR V AND THE CORRESPONDING H OR V ARE REPORTED.
2. POSITIVE REACTIONS ARE AS SHOWN IN THE SKETCH. FOUNDATION LOADS ARE IN OPPOSITE DIRECTIONS.
3. BRACING REACTIONS ARE IN THE PLANE OF THE BRACE WITH THE H POINTING AWAY FROM THE BRACED BAY. THE VERTICAL REACTION IS DOWNWARD.

BUILDING BRACING REACTIONS

Wall Loc	Wall Line	Col Line	± Reactions(k) Wind Horz	Wind Vert	Seismic Horz	Seismic Vert	Panel_Shear (lb/ft) Wind	Seis	Note
L_EW	1								(h)
F_SW	D	3,4	5.4	2.0	3.4	1.2			
R_EW	6								(h)
B_SW	A	4,3	4.3	1.6	2.9	1.1			

(h)Rigid frame at endwall

Flying Horse N Golf Barn		RapidsetBuildings.com	
PROJECT	Flying Horse Barn	PHONE: 800.793.8555	
ID	DBS074838C	ANCHOR BOLT REACTIONS	
PROJECT ADDRESS	2138 Flying Horse Club Dr. Colorado Springs, CO 80921	DESIGN: Designer	NBS
		DATE: 11/27/20 SHEET 3	OF 20

MEMBER TABLE FRAME LINE D		
MARK	PART	LENGTH
E-100	08E2060	18'-5 1/2"
E-101	08E2060	20'-11 1/2"
E-102	08E2060	18'-5 1/2"
G-103	08Z060	16'-5 1/2"
G-104	08Z067	20'-3 1/2"
CB-100	RDB-	23'-0"

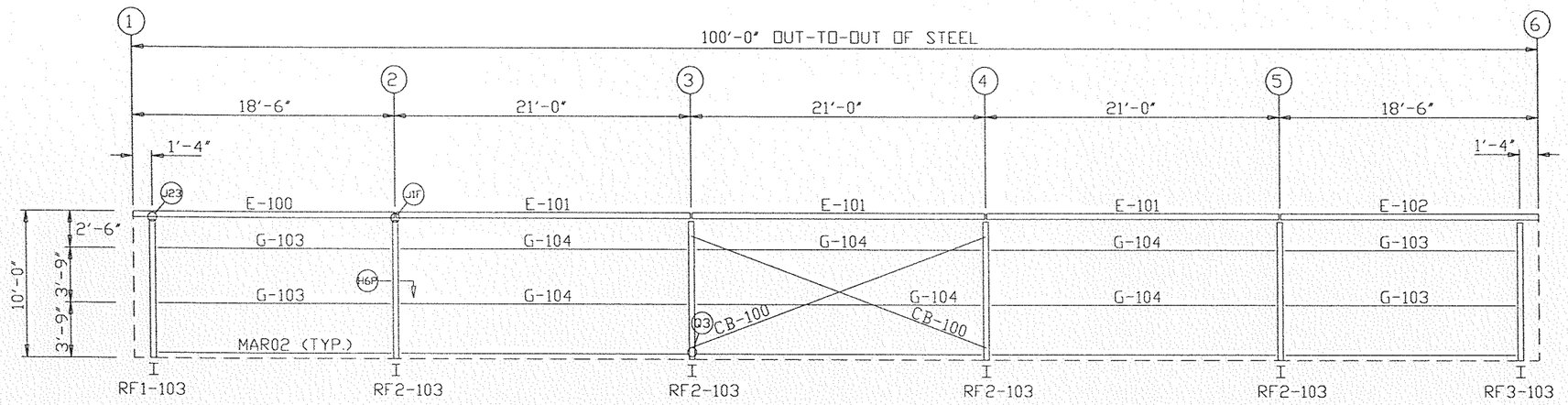

SIDEWALL FRAMING: FRAME LINE D

SIDEWALL FRAMING PLAN

GENERAL NOTES

1. STD. ROD/CABLE SIZES PER PART PREFIX ARE:

ROD	CABLE
RDB- = 5/8" ROD	CAA- = 1/4" CABLE
RDC- = 3/4" ROD	CAB- = 3/8" CABLE
RDD- = 7/8" ROD	CAC- = 1/2" CABLE
RDE- = 1" ROD	
RDF- = 1 1/8" ROD	
RDG- = 1 1/4" ROD	

2. ROD/CABLE BRACING THAT OCCURS IN FLUSH OR INSET GIRT CONDITIONS WILL REQUIRE FIELD SLOTTING OF GIRT WEBS TO ALLOW FOR BRACING.
3. FRAMED OPENINGS WHICH ARE FIELD LOCATED WILL REQUIRE FIELD CUTTING OF GIRTS AND SHEETING.
4. THIS DRAWING IS NOT TO SCALE.

Flying Horse N Golf Barn		RapidsetBuildings.com		
PROJECT	Flying Horse Barn	PHONE: 800.793.8555		
ID	DBS074838C	SIDEWALL FRAMING		
PROJECT ADDRESS	2138 Flying Horse Club Dr. Colorado Springs, CO 80921	DESIGN: Designer		NBS
		DATE: 11/27/20	SHEET 4	OF 20

TRIM TABLE FRAME LINE D			
◇ID	PART	LENGTH	DETAIL
1	LEA01	10'-2"	TRIM_734
2	ERA01	8 1/16"	
3	□CA01	Use Drop	TRIM_79
4	□CA01	20'-2"	TRIM_79
5	BSD01	10'-2"	TRIM_200

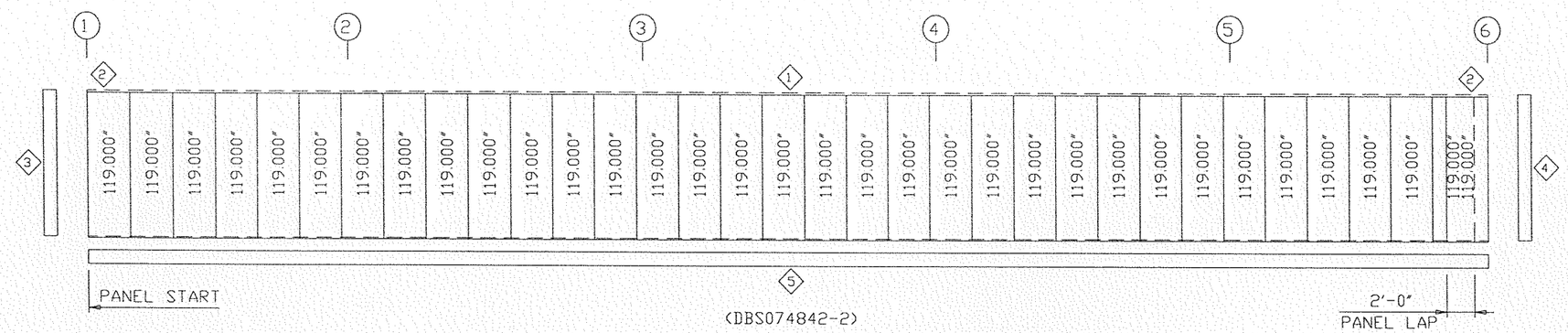

SIDEWALL SHEETING & TRIM: FRAME LINE D

PANELS: 26 Ga. CW - Sagebrush Tan SP
(DBS074842-2) PANELS: 26 Ga. CW - Sagebrush Tan SP

THIS DRAWING IS NOT TO SCALE

Flying Horse N Golf Barn		RapidsetBuildings.com		
PROJECT	Flying Horse Barn	PHONE: 800.793.8555		
ID	DBS074838C	SIDEWALL SHEETING		
PROJECT ADDRESS	2138 Flying Horse Club Dr. Colorado Springs, CO 80921	DESIGN: Designer		NBS
		DATE: 11/27/20	SHEET 5	OF 20

MEMBER TABLE FRAME LINE A		
MARK	PART	LENGTH
E-100	08E2060	18'-5 1/2"
E-101	08E2060	20'-11 1/2"
E-102	08E2060	18'-5 1/2"
G-103	08Z060	16'-5 1/2"
G-104	08Z067	20'-3 1/2"
CB-100	RDB-	23'-0"

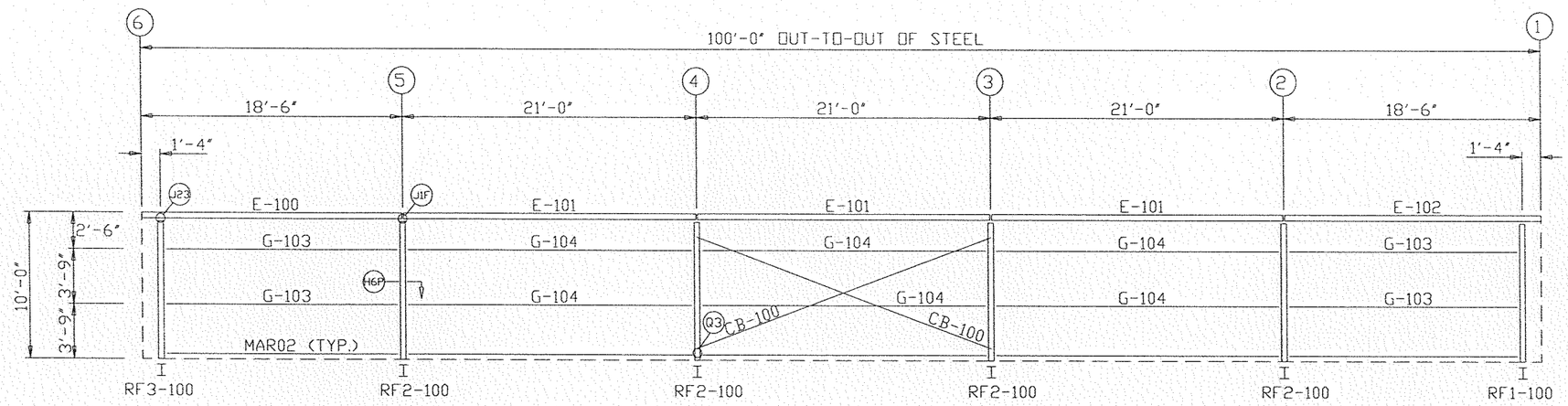

SIDEWALL FRAMING: FRAME LINE A

SIDEWALL FRAMING PLAN

GENERAL NOTES

1. STD. ROD/CABLE SIZES PER PART PREFIX ARE:

ROD		CABLE	
RDB-	= 5/8" ROD	CAA-	= 1/4" CABLE
RDC-	= 3/4" ROD	CAB-	= 3/8" CABLE
RDD-	= 7/8" ROD	CAC-	= 1/2" CABLE
RDE-	= 1" ROD		
RDF-	= 1 1/8" ROD		
RDG-	= 1 1/4" ROD		

2. ROD/CABLE BRACING THAT OCCURS IN FLUSH OR INSET GIRT CONDITIONS WILL REQUIRE FIELD SLOTTING OF GIRT WEBS TO ALLOW FOR BRACING.

3. FRAMED OPENINGS WHICH ARE FIELD LOCATED WILL REQUIRE FIELD CUTTING OF GIRTS AND SHEETING.

4. THIS DRAWING IS NOT TO SCALE.

Flying Horse N Golf Barn		RapidsetBuildings.com		
PROJECT	Flying Horse Barn	PHONE: 800.793.8555		
ID	DBS074838C	SIDEWALL FRAMING		
PROJECT ADDRESS	2138 Flying Horse Club Dr. Colorado Springs, CO 80921	DESIGN: Designer		NBS
		DATE: 11/27/20	SHEET 6	OF 20

TRIM TABLE FRAME LINE A			
◇ID	PART	LENGTH	DETAIL
1	BSD01	10'-2"	TRIM_200
2	OCA01	Use Drop	TRIM_79
3	OCA01	20'-2"	TRIM_79
4	LEB02	10'-2"	TRIM_5
5	H4000	5"	
6	ERA01	8 1/16"	
7	RCA01	9 1/4"	
8	RCA02	9 1/4"	

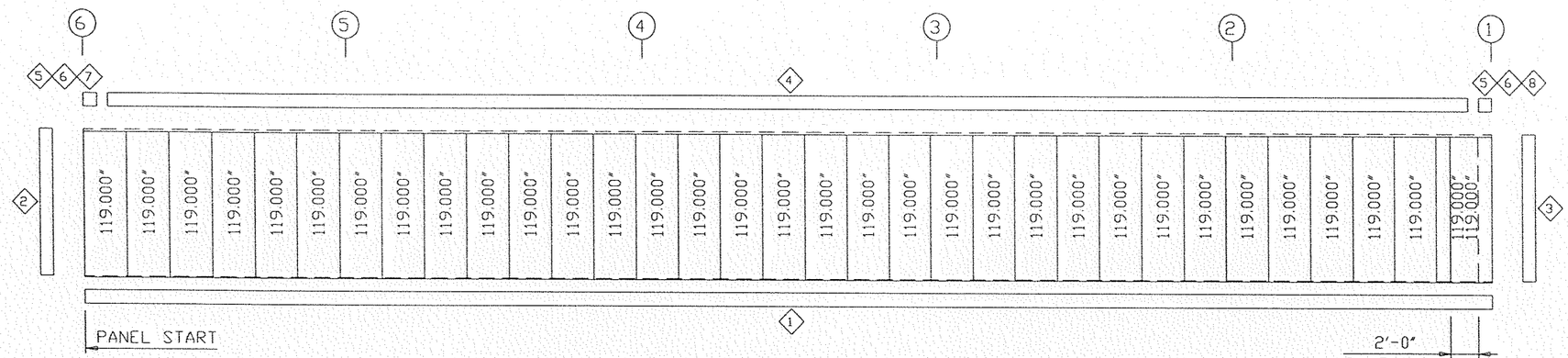

SIDEWALL SHEETING & TRIM: FRAME LINE A

PANELS: 26 Ga. CW - Sagebrush Tan SP

THIS DRAWING IS NOT TO SCALE

Flying Horse N Golf Barn		RapidsetBuildings.com		
PROJECT	Flying Horse Barn	PHONE: 800.793.8555		
ID	DBS074838C	SIDEWALL SHEETING		
PROJECT ADDRESS	2138 Flying Horse Club Dr. Colorado Springs, CO 80921	DESIGN: Designer		NBS
		DATE: 11/27/20	SHEET 7	OF 20

BOLT TABLE FRAME LINE 1				
LOCATION	QUAN	TYPE	DIA	LENGTH
Columns/Raf	8	A325	1/2"	2"
Jamb	4	A325	1/2"	2"

MEMBER TABLE FRAME LINE 1		
MARK	PART	LENGTH
EC-100	W08S075	11'-2 1/4"
EC-101	W08S075	11'-2 1/4"
DJ-100	J08C060	11'-6 3/4"
DJ-101	J08C060	11'-6 3/4"
DH-100	J08C060	16'-0"
G-100	08Z060	18'-7 1/2"
G-101	08Z060	2'-4 1/2"
G-102	08Z060	18'-7 1/2"

CONNECTION PLATES FRAME LINE 1	
ID	MARK/PART
1	CSR07
2	GCC03
3	JCA&P02

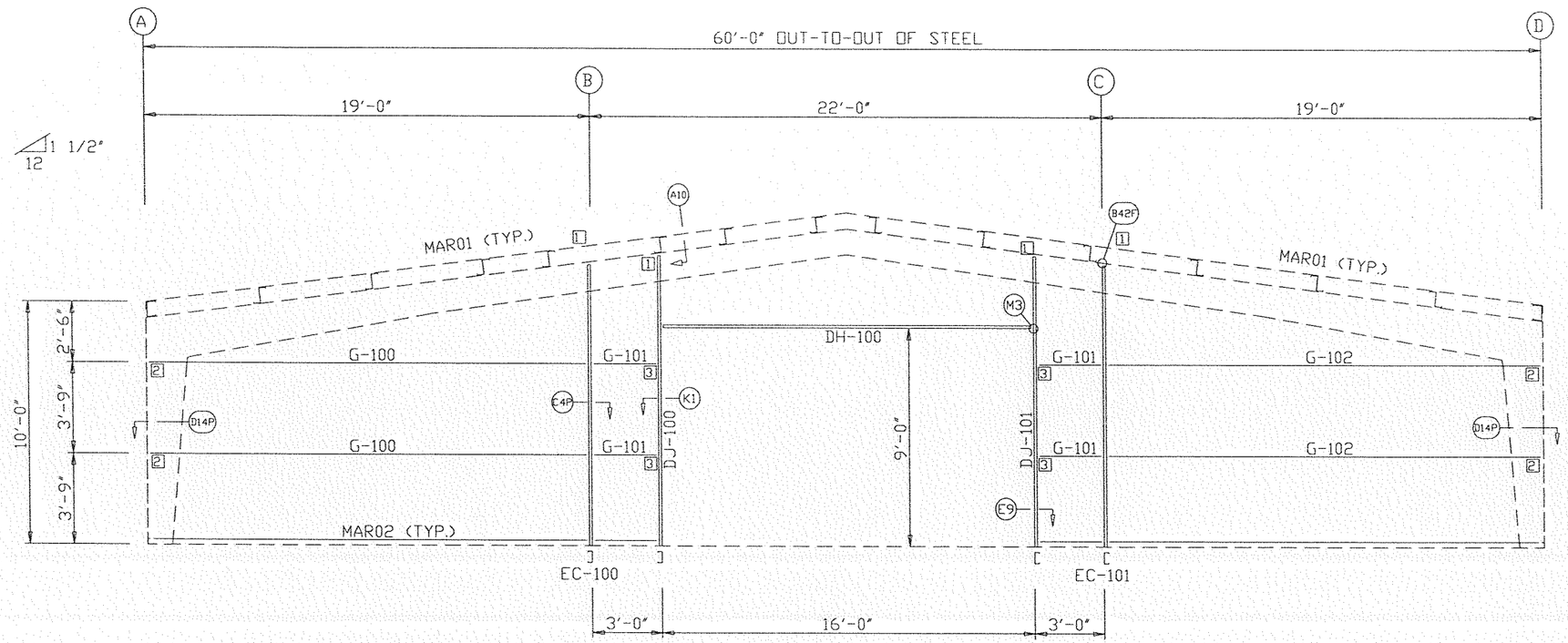

ENDWALL FRAMING: FRAME LINE 1

ENDWALL FRAMING PLAN

GENERAL NOTES

1. STD. ROD/CABLE SIZES PER PART PREFIX ARE:

ROD		CABLE	
RDB-	= 5/8" ROD	CAA-	= 1/4" CABLE
RDC-	= 3/4" ROD	CAB-	= 3/8" CABLE
RDD-	= 7/8" ROD	CAC-	= 1/2" CABLE
RDE-	= 1" ROD		
RDF-	= 1 1/8" ROD		
RDG-	= 1 1/4" ROD		

2. ROD/CABLE BRACING THAT OCCURS IN FLUSH OR INSET GIRT CONDITIONS WILL REQUIRE FIELD SLOTTING OF GIRT WEBS TO ALLOW FOR BRACING.
3. FRAMED OPENINGS WHICH ARE FIELD LOCATED WILL REQUIRE FIELD CUTTING OF GIRTS AND SHEETING.
4. THIS DRAWING IS NOT TO SCALE.

Flying Horse N Golf Barn		RapidsetBuildings.com		
PROJECT	Flying Horse Barn	PHONE: 800.793.8555		
ID	DBS074838C	ENDWALL FRAMING		
PROJECT ADDRESS	2138 Flying Horse Club Dr. Colorado Springs, CO 80921	DESIGN: Designer		NBS
		DATE: 11/27/20	SHEET 8	OF 20

TRIM TABLE FRAME LINE 1			
◇ID	PART	LENGTH	DETAIL
1	BSD01	10'-2"	TRIM_200
2	□CA01	20'-2"	TRIM_79
3	RTA02	20'-2"	TRIM_2
4	MPB01	2'-2 7/16"	
5	CCA121	10'-1"	TRIM_19
6	JTA121	10'-1"	TRIM_98
7	CCA193	16'-1"	TRIM_19
8	HTA196	16'-4"	TRIM_98
9	□CA01	Use Drop	TRIM_79

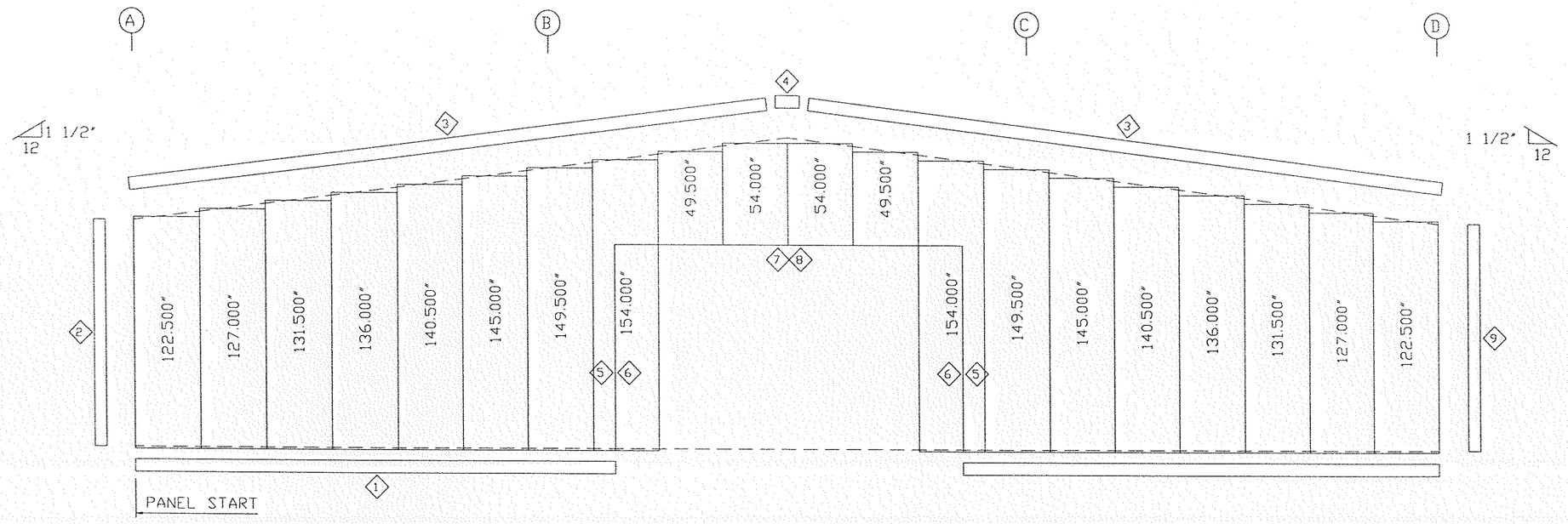

ENDWALL SHEETING & TRIM: FRAME LINE 1

PANELS: 26 Ga. CW - Sagebrush Tan SP

NOTE: FIELD CUT WALL PANELS AS REQUIRED

THIS DRAWING IS NOT TO SCALE

Flying Horse N Golf Barn		RapidsetBuildings.com		
PROJECT	Flying Horse Barn	PHONE: 800.793.8555		
ID	DBS074838C	ENDWALL SHEETING		
PROJECT ADDRESS	2138 Flying Horse Club Dr. Colorado Springs, CO 80921	DESIGN: Designer		NBS
		DATE: 11/27/20	SHEET 9	OF 20

BOLT TABLE FRAME LINE 6				
LOCATION	QUAN	TYPE	DIA	LENGTH
Columns/Raf	8	A325	1/2"	2"
Jamb	4	A325	1/2"	2"

MEMBER TABLE FRAME LINE 6		
MARK	PART	LENGTH
EC-100	W08S075	11'-2 1/4"
EC-101	W08S075	11'-2 1/4"
DJ-100	J08C060	11'-6 3/4"
DJ-101	J08C060	11'-6 3/4"
DH-100	J08C060	16'-0"
G-100	08Z060	18'-7 1/2"
G-101	08Z060	2'-4 1/2"
G-102	08Z060	18'-7 1/2"

CONNECTION PLATES FRAME LINE 6	
ID	MARK/PART
1	CSR07
2	GCC03
3	JCA&P02

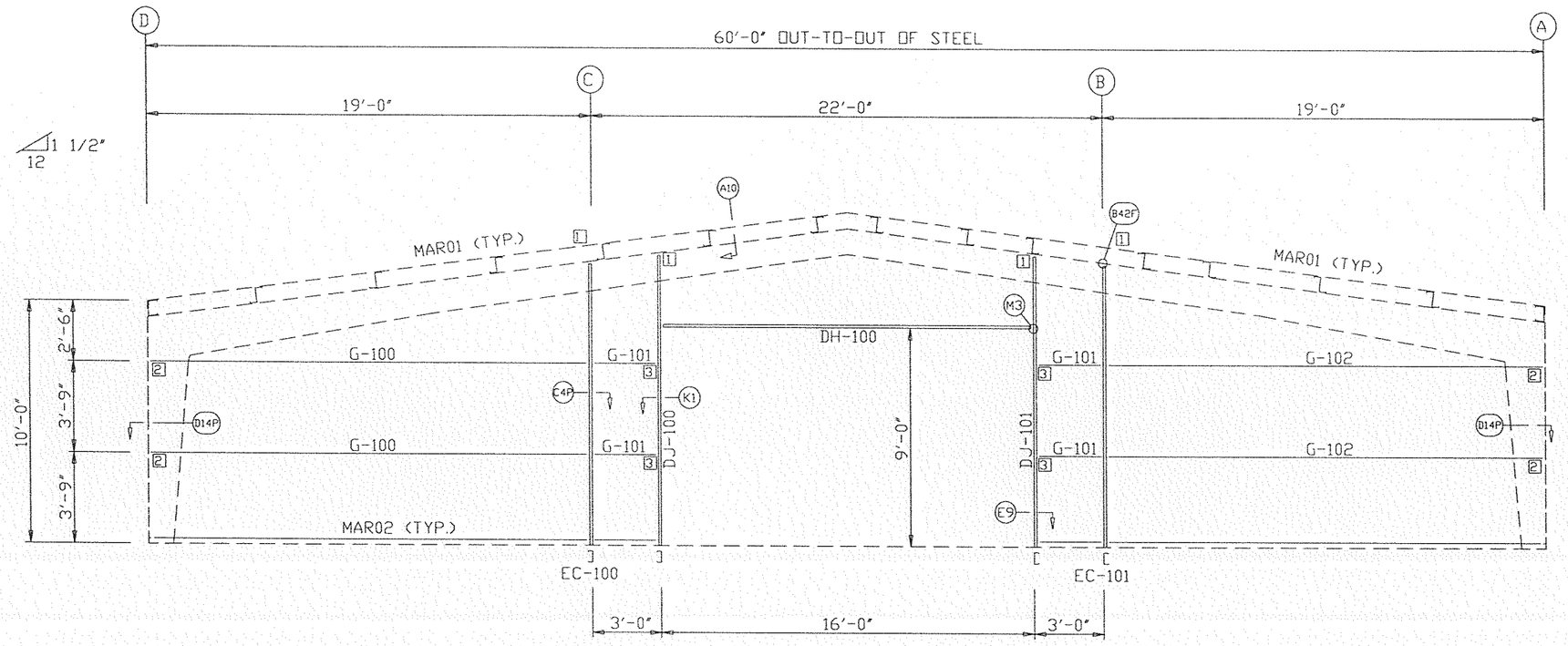

ENDWALL FRAMING: FRAME LINE 6

ENDWALL FRAMING PLAN

GENERAL NOTES

1. STD. ROD/CABLE SIZES PER PART PREFIX ARE:

ROD		CABLE	
RDB-	= 5/8" ROD	CAA-	= 1/4" CABLE
RDC-	= 3/4" ROD	CAB-	= 3/8" CABLE
RDD-	= 7/8" ROD	CAC-	= 1/2" CABLE
RDE-	= 1" ROD		
RDF-	= 1 1/8" ROD		
RDG-	= 1 1/4" ROD		

2. ROD/CABLE BRACING THAT OCCURS IN FLUSH OR INSET GIRT CONDITIONS WILL REQUIRE FIELD SLOTTING OF GIRT WEBS TO ALLOW FOR BRACING.
3. FRAMED OPENINGS WHICH ARE FIELD LOCATED WILL REQUIRE FIELD CUTTING OF GIRTS AND SHEETING.
4. THIS DRAWING IS NOT TO SCALE.

Flying Horse N Golf Barn		RapidsetBuildings.com		
PROJECT	Flying Horse Barn	PHONE: 800.793.8555		
ID	DBS074838C	ENDWALL FRAMING		
PROJECT ADDRESS	2138 Flying Horse Club Dr. Colorado Springs, CO 80921	DESIGN: Designer		NBS
		DATE: 11/27/20	SHEET 10	OF 20

TRIM TABLE FRAME LINE 6			
◇ID	PART	LENGTH	DETAIL
1	BSD01	10'-2"	TRIM_200
2	DCA01	Use Drop	TRIM_79
3	RTA02	20'-2"	TRIM_2
4	MPB01	2'-2 7/16"	
5	CCA121	10'-1"	TRIM_19
6	JTA121	10'-1"	TRIM_98
7	CCA193	16'-1"	TRIM_19
8	HTA196	16'-4"	TRIM_98
9	DCA01	Use Drop	TRIM_79

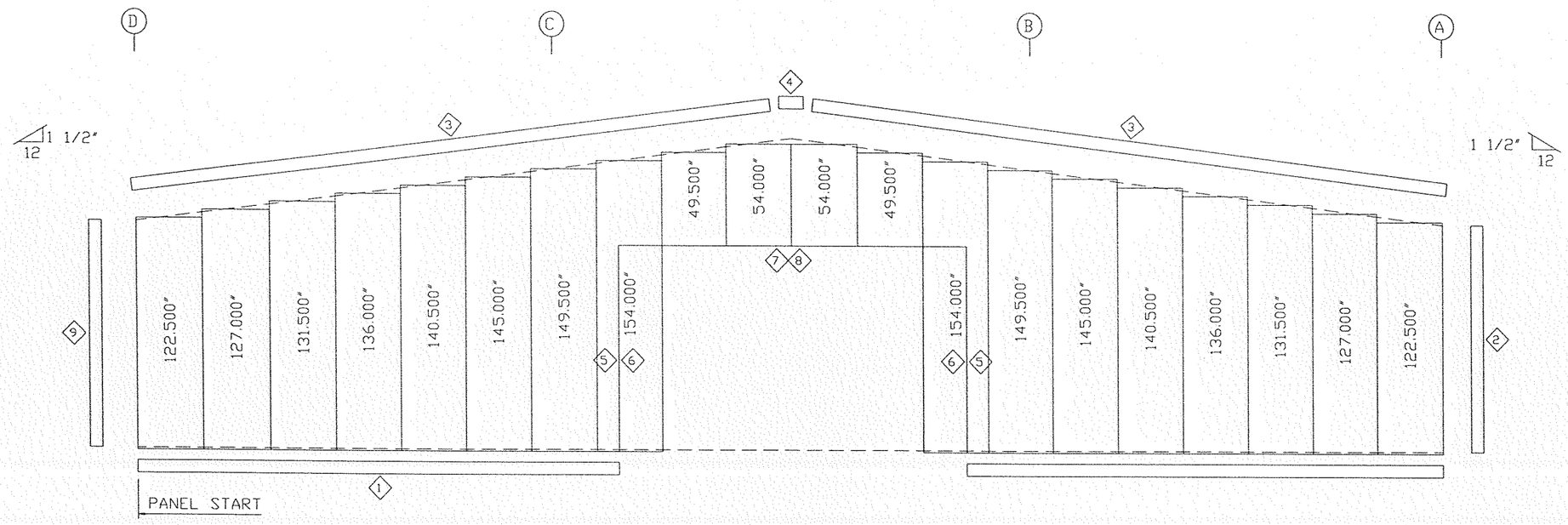

ENDWALL SHEETING & TRIM: FRAME LINE 6

PANELS: 26 Ga. CW - Sagebrush Tan SP

NOTE: FIELD CUT WALL PANELS AS REQUIRED

THIS DRAWING IS NOT TO SCALE

Flying Horse N Golf Barn		RapidsetBuildings.com	
PROJECT	Flying Horse Barn	PHONE: 800.793.8555	
ID	DBS074838C	ENDWALL SHEETING	
PROJECT ADDRESS	2138 Flying Horse Club Dr. Colorado Springs, CO 80921	DESIGN: Designer	NBS
		DATE: 11/27/20	SHEET 11 OF 20

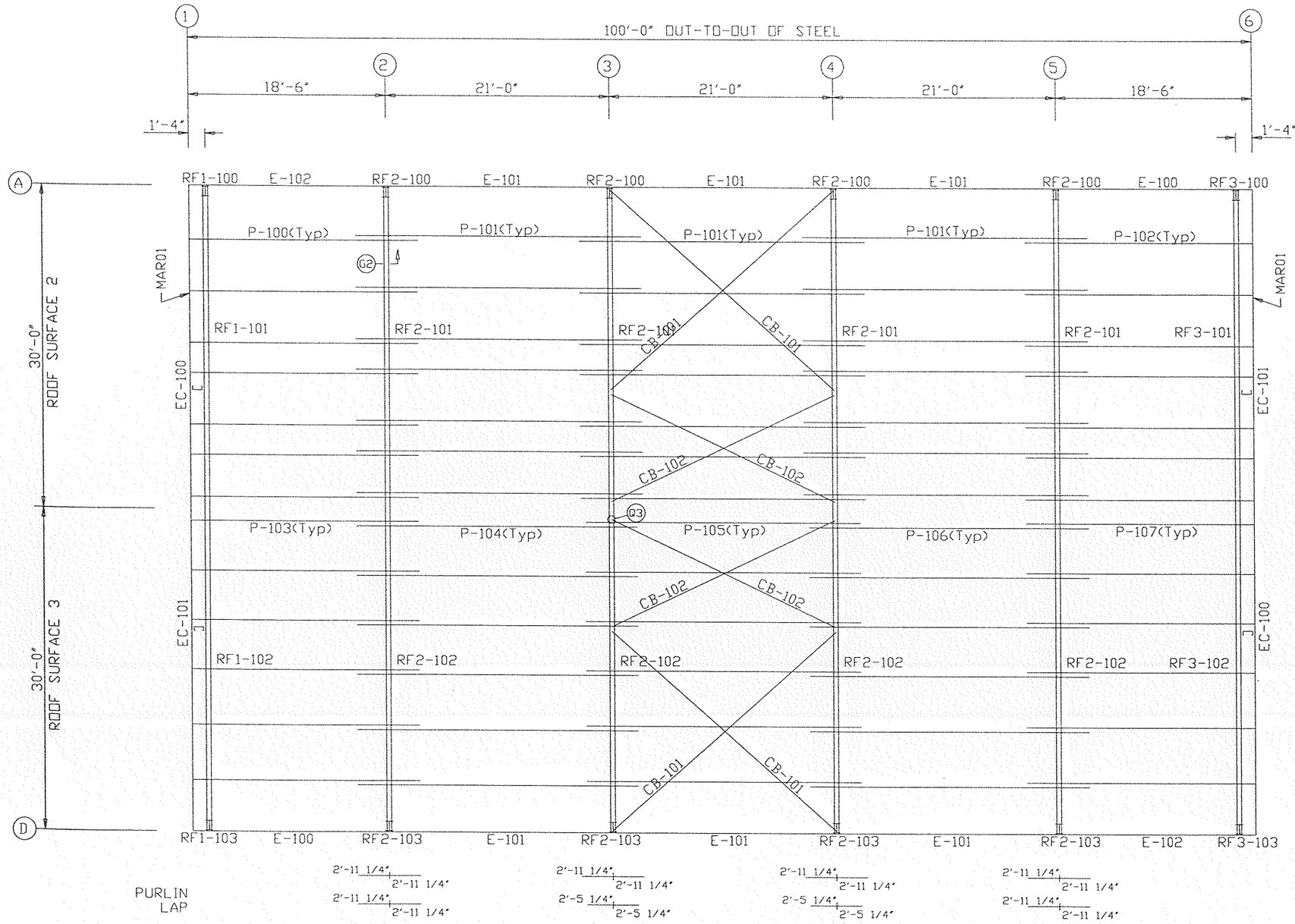

ROOF FRAMING PLAN

MEMBER TABLE
ROOF PLAN

MARK	PART	LENGTH
P-100	08Z060	21'-5"
P-101	08Z060	26'-10 1/2"
P-102	08Z060	21'-5"
P-103	08Z067	21'-5"
P-104	08Z067	26'-4 1/2"
P-105	08Z067	25'-10 1/2"
P-106	08Z067	26'-4 1/2"
P-107	08Z067	21'-5"
E-100	08E2060	18'-5 1/2"
E-101	08E2060	20'-11 1/2"
E-102	08E2060	18'-5 1/2"
CB-101	RDB-	27'-10"
CB-102	RDB-	23'-8"

ROOF FRAMING PLAN

GENERAL NOTES

1. PLACE TAGGED END OF RAFTERS TOWARDS THE LOW EAVE.
2. STD. ROD/CABLE SIZES PER PART PREFIX ARE:

ROD	CABLE
RDB- = 5/8" ROD	CAA- = 1/4" CABLE
RDC- = 3/4" ROD	CAB- = 3/8" CABLE
RDD- = 7/8" ROD	CAC- = 1/2" CABLE
RDE- = 1" ROD	
RDF- = 1 1/8" ROD	
RDG- = 1 1/4" ROD	

3. PURLIN AND EAVE STRUT CONNECTIONS UTILIZE BOTH A307 AND A325 BOLTS. REFER TO THE DETAILS FOR SPECIFIC USAGE REQUIREMENTS.
4. THIS DRAWING IS NOT TO SCALE.

THIS DRAWING IS NOT TO SCALE

Flying Horse N Golf Barn		RapidsetBuildings.com		
PROJECT	Flying Horse Barn	PHONE: 800.793.8555		
ID	DBS074838C	ROOF FRAMING		
PROJECT ADDRESS	2138 Flying Horse Club Dr. Colorado Springs, CO 80921	DESIGN: Designer		NBS
		DATE: 11/27/20	SHEET 12	OF 20

TRIM TABLE			
ROOF SHEETING PLAN			
◇ID	PART	LENGTH	DETAIL
1	RGA15	3'-0"	TRIM 3

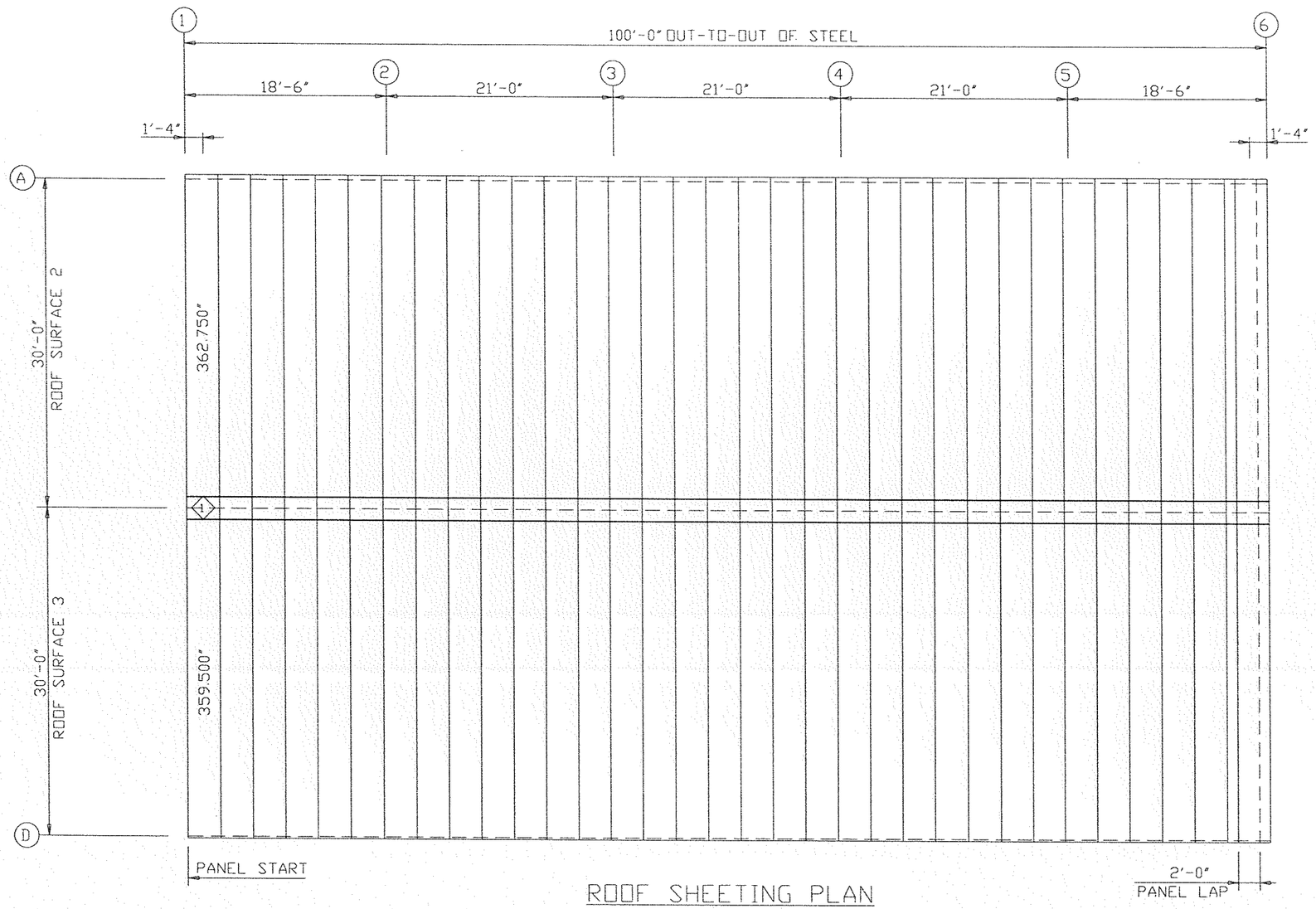

ROOF SHEETING PLAN

PANELS: 26 Ga. CR - Burnished Slate SP

THIS DRAWING IS NOT TO SCALE

Flying Horse N Golf Barn		RapidsetBuildings.com		
PROJECT	Flying Horse Barn	PHONE: 800.793.8555		
ID	DBS074838C	ROOF SHEETING PLAN		
PROJECT ADDRESS	2138 Flying Horse Club Dr. Colorado Springs, CO 80921	DESIGN: Designer		NBS
		DATE: 11/27/20	SHEET 13	OF 20

SPLICE BOLT TABLE						
Mark	Qty Top	Bot	Int	Type	Dia	Length
SP-1	4	4	0	A325	0.625	2.25

MEMBER TABLE					
Mark	Web Depth Start/End	Web Plate Thick	Web Plate Length	Outside Flange W x Thk x Length	Inside Flange W x Thk x Length
RF1-100	12.0/20.0	0.150	89.4	5 x 3/16" x 111.2	5 x 3/8" x 89.8
	20.0/20.0	0.220	24.3	5 x 3/8" x 20.3	
RF1-101	21.0/15.0	0.150	126.1	5 x 3/16" x 340.8	5 x 3/8" x 126.2
	15.0/12.0	0.150	217.4		5 x 3/16" x 215.9
RF1-102	12.0/15.0	0.150	217.4	5 x 3/16" x 340.8	5 x 3/16" x 215.9
	15.0/21.0	0.150	126.1		5 x 3/8" x 126.2
RF1-103	20.0/20.0	0.220	24.3	5 x 3/8" x 20.3	5 x 3/8" x 89.8
	20.0/12.0	0.150	89.4	5 x 3/16" x 111.2	

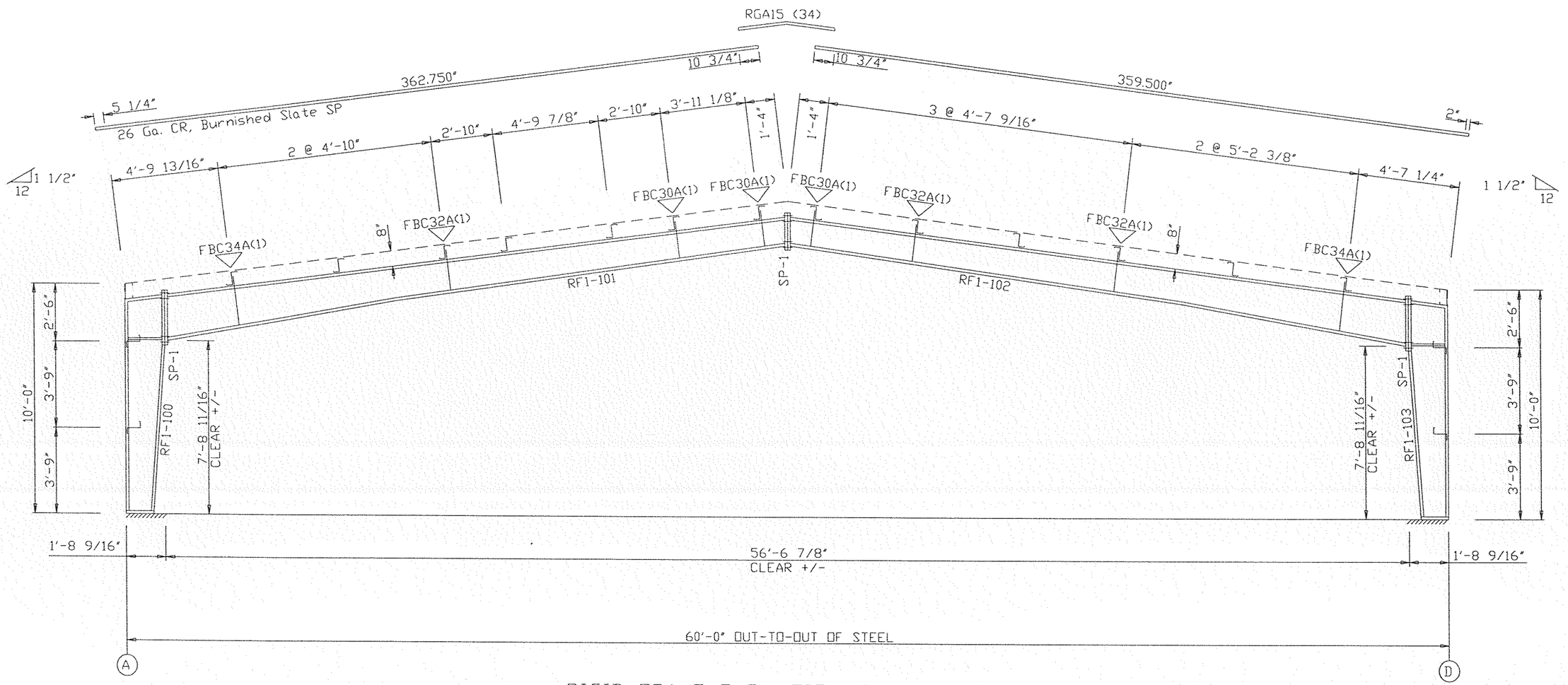

RIGID FRAME ELEVATION: FRAME LINE 1

THIS DRAWING IS NOT TO SCALE

Flying Horse N Golf Barn		RapidsetBuildings.com		
PROJECT	Flying Horse Barn	PHONE: 800.793.8555		
ID	DBS074838C	RIGID FRAME ELEVATION		
PROJECT ADDRESS	2138 Flying Horse Club Dr. Colorado Springs, CO 80921	DESIGN: Designer		NBS
		DATE: 11/27/20	SHEET 14	OF 20

SPLICE BOLT TABLE						
Mark	Qty Top	Bot	Int	Type	Dia	Length
SP-1	4	4	0	A325	0.750	3.00
SP-2	4	4	0	A325	0.625	2.25

MEMBER TABLE					
Mark	Web Depth Start/End	Web Plate Thick	Web Plate Length	Outside Flange W x Thk x Length	Inside Flange W x Thk x Length
RF2-100	12.0/30.0	0.220	81.1	6 x 1/4" x 110.9	6 x 5/16" x 83.0
	30.0/30.0	0.250	33.6	6 x 1/2" x 30.4	
RF2-101	30.0/20.0	0.220	117.1	6 x 1/4" x 113.3	6 x 5/16" x 117.5
	20.0/19.0	0.150	217.4	6 x 5/16" x 217.4	6 x 1/4" x 214.9
RF2-102	19.0/20.0	0.150	217.4	6 x 5/16" x 217.4	6 x 1/4" x 214.9
	20.0/30.0	0.220	117.1	6 x 1/4" x 113.3	6 x 5/16" x 117.5
RF2-103	30.0/30.0	0.250	33.6	6 x 1/2" x 30.4	6 x 5/16" x 83.0
	30.0/12.0	0.220	81.1	6 x 1/4" x 110.9	

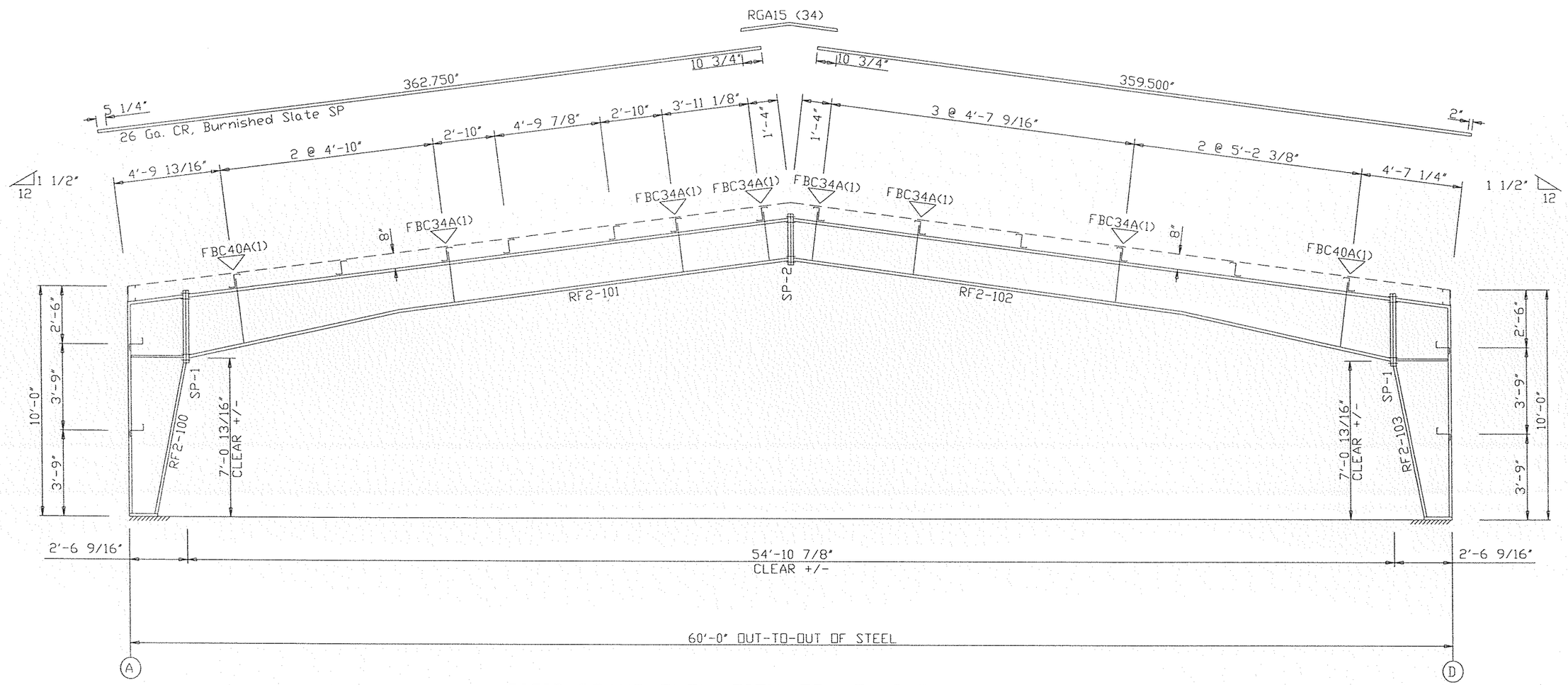

RIGID FRAME ELEVATION: FRAME LINE 2 3 4 5

THIS DRAWING IS NOT TO SCALE

Flying Horse N Golf Barn		RapidsetBuildings.com	
PROJECT	Flying Horse Barn	PHONE: 800.793.8555	
ID	DBS074838C	RIGID FRAME ELEVATION	
PROJECT ADDRESS	2138 Flying Horse Club Dr. Colorado Springs, CO 80921	DESIGN: Designer	NBS
		DATE: 11/27/20 SHEET 15	OF 20

SPLICE BOLT TABLE						
Mark	Qty Top	Bot	Int	Type	Dia	Length
SP-1	4	4	0	A325	0.625	2.25

MEMBER TABLE					
Mark	Web Depth Start/End	Web Plate Thick	Web Plate Length	Outside Flange W x Thk x Length	Inside Flange W x Thk x Length
RF3-100	12.0/20.0	0.150	89.4	5 x 3/16" x 111.2	5 x 3/8" x 89.8
	20.0/20.0	0.220	24.3	5 x 3/8" x 20.3	
RF3-101	21.0/15.0	0.150	126.1	5 x 3/16" x 340.8	5 x 3/8" x 126.2
	15.0/12.0	0.150	217.4		5 x 3/16" x 215.9
RF3-102	12.0/15.0	0.150	217.4	5 x 3/16" x 340.8	5 x 3/16" x 215.9
	15.0/21.0	0.150	126.1		5 x 3/8" x 126.2
RF3-103	20.0/20.0	0.220	24.3	5 x 3/8" x 20.3	5 x 3/8" x 89.8
	20.0/12.0	0.150	89.4	5 x 3/16" x 111.2	

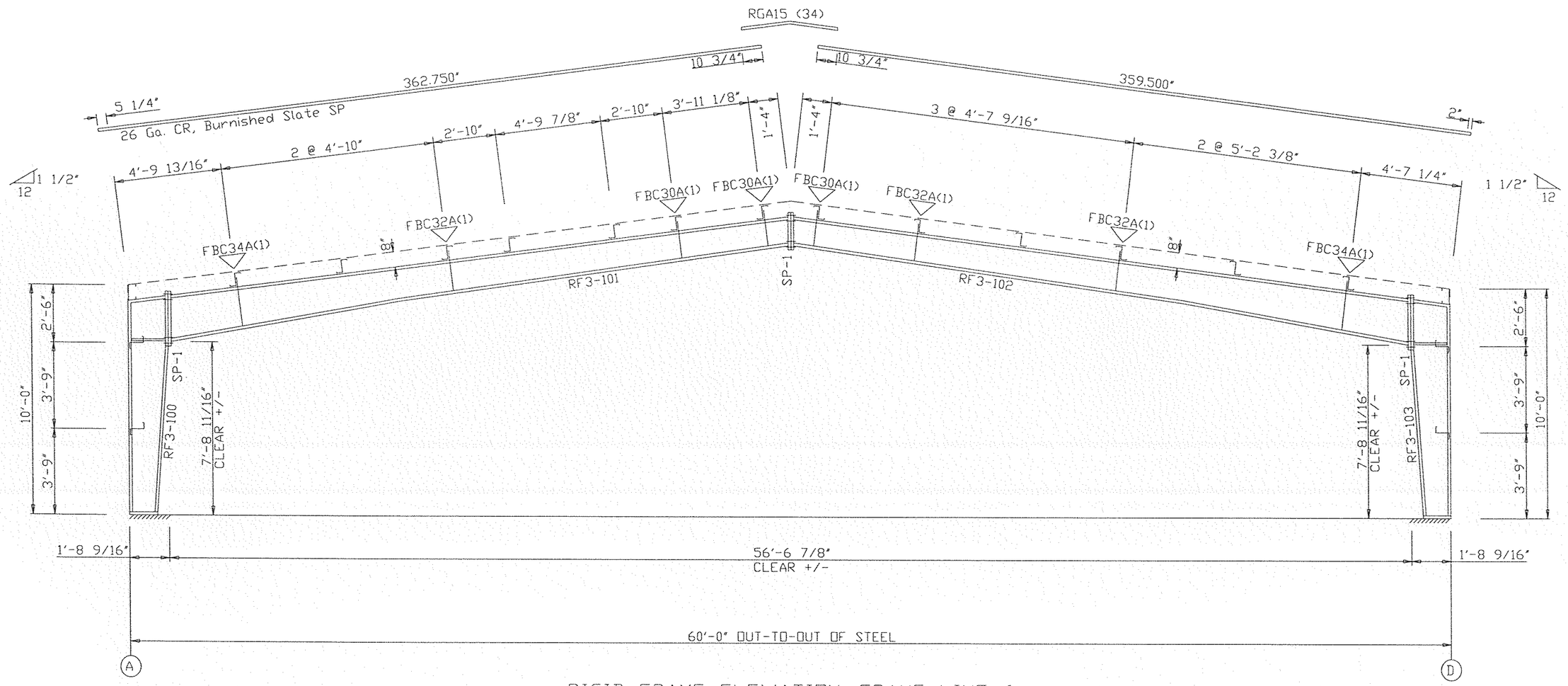

RIGID FRAME ELEVATION: FRAME LINE 6

THIS DRAWING IS NOT TO SCALE

Flying Horse N Golf Barn		RapidsetBuildings.com	
PROJECT	Flying Horse Barn	PHONE: 800.793.8555	
ID	DBS074838C	RIGID FRAME ELEVATION	
PROJECT ADDRESS	2138 Flying Horse Club Dr. Colorado Springs, CO 80921	DESIGN: Designer	NBS
		DATE: 11/27/20	SHEET 16 OF 20

TYPICAL WASHER REQUIREMENTS ERECTOR NOTE

(UNLESS NOTED OTHERWISE ON DRAWINGS)

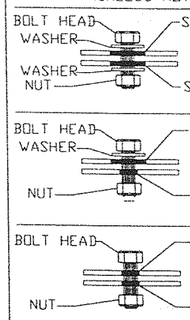

SLOT TO SLOT CONNECTIONS

WASHERS ARE REQUIRED ON BOTH SIDES OF MATERIAL IF SLOTS ARE USED ON BOTH SIDES (NOTE LAPPED ZEE MEMBER EXCEPTION).

SLOT TO HOLE CONNECTIONS

ONE WASHER REQUIRED ON SLOTTED SIDE ONLY.

HOLE TO HOLE CONNECTIONS

NO WASHERS ARE REQUIRED WHEN SLOTS ARE NOT USED.

WASHER PART NUMBERS\

H0200 - 1/2" FLAT WASHER	H0240 - 1" FLAT WASHER
H0210 - 5/8" FLAT WASHER	H0250 - 1 1/8" FLAT WASHER
H0220 - 3/4" FLAT WASHER	H0260 - 1 1/4" FLAT WASHER
H0230 - 7/8" FLAT WASHER	

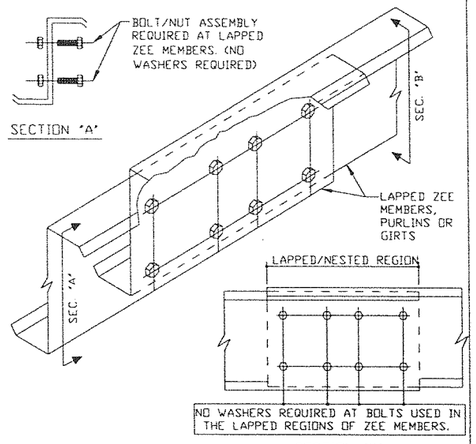

COLLATERAL DEAD LOADS, UNLESS OTHERWISE NOTED, ARE ASSUMED TO BE UNIFORMLY DISTRIBUTED. WHEN SUSPENDED SPRINKLER SYSTEMS, LIGHTING, HVAC EQUIPMENT, CEILINGS, ETC ARE SUSPENDED FROM ROOF MEMBERS, CONSULT ENGINEER OF RECORD IF THESE CONCENTRATED LOADS EXCEED 500 POUNDS (USING THE WEB MOUNT DETAIL) OR 200 POUNDS (USING THE FLANGE MOUNT DETAIL), OR IF INDIVIDUAL MEMBERS ARE LOADED SIGNIFICANTLY MORE THAN OTHERS.

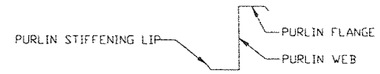

GENERAL RESTRICTION:

UNDER NO CIRCUMSTANCES CAN THE PURLIN STIFFENING LIP BE FIELD MODIFIED FROM THE FACTORY SUPPLIED CONDITION. ALSO DO NOT HANG ANYTHING FROM PURLIN STIFFENING LIP.

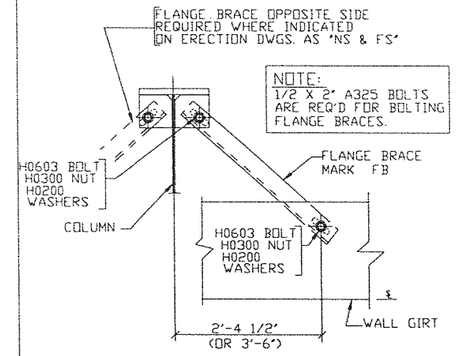

TYP FLANGE BRACE @ BU COL & GIRT

NOTE: SEE PLANS AND ELEVATIONS FOR FLANGE BRACE PART MARKS

AG0030

OPTIONS FOR SUPPORT ATTACHMENTS

OPTION A (200 LBS MAX)

DRILL SUPPORT THROUGH THE BOTTOM FLANGE OF THE PURLIN.

OPTION B (500 LBS MAX)

SUPPORT ANGLE OR SOME OTHER TYPE OF BRACKET. (NOT BY NBS) SUPPORT THROUGH PURLIN WEB.

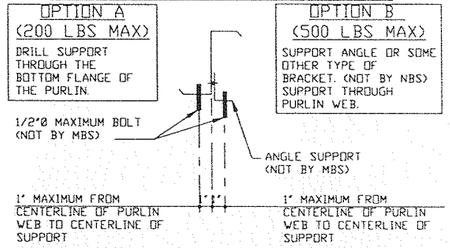

OPTION C: (200 LBS MAX)

IF PURLIN FLANGE SUPPORT CLAMPS ARE USED.

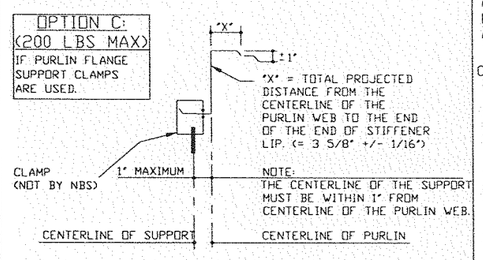

PURLIN SUPPORT METHODS

B00010

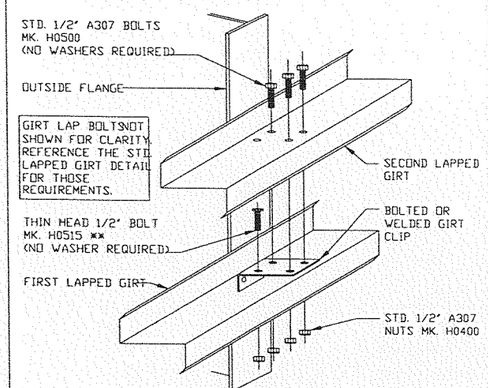

LAPPED GIRT DETAIL

LAPPED GIRTS @ INTERIOR BAY COLUMNS

** THE THIN HEAD 1/2" A307 BOLT MUST BE INSTALLED INTO THE FIRST GIRT AND CLIP OF A LAPPED CONDITION. THE BOLT/NUT ASSEMBLY MUST BE WRENCH TIGHT PRIOR TO THE SECOND LAPPED GIRT BEING INSTALLED.

CC0015

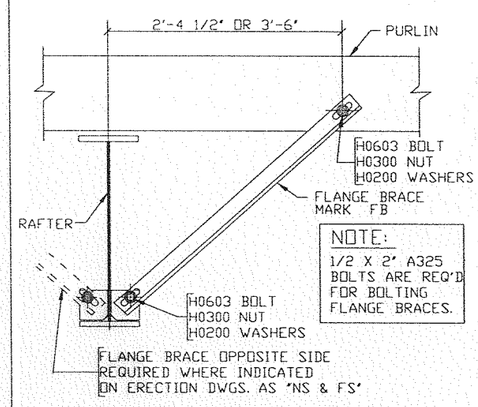

TYP FLANGE BRACE @ PURLIN & RAFTER

NOTE: SEE PLANS AND ELEVATIONS FOR FLANGE BRACE PART MARKS

AG0010

ERECTOR NOTE: UNLESS SPECIFICALLY NOTED OTHERWISE, STANDARD ZEE GIRT ORIENTATION IS TO HAVE THE GIRT TOED DOWN AT THE STEEL LINE AS SHOWN IN THE DETAIL BELOW.

UNLESS SPECIFICALLY NOTED OTHERWISE, STANDARD CEE GIRT ORIENTATION IS TO HAVE THE GIRT TOED UP AS SHOWN IN THE DETAIL BELOW. STANDARD CLIP ATTACHMENT IS BELOW THE GIRT, HOWEVER SOME DETAILS REQUIRE THAT THE CLIP BE ABOVE THE GIRT. (REFER TO THE GIRT DETAILS ON THE ERECTION DRAWINGS FOR REQUIREMENTS) BOTH CLIP ATTACHMENTS ARE SHOWN IN THE DETAIL BELOW.

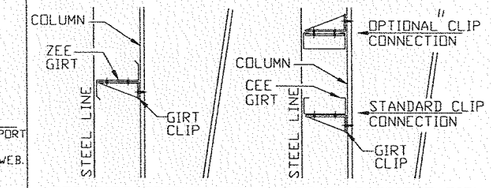

ZEE GIRT ORIENTATION | CEE GIRT ORIENTATION

STANDARD GIRT ORIENTATION DETAIL

NOTE: BYPASS GIRT CONDITION IS SHOWN FOR REFERENCE ONLY. YOUR PROJECT MAY HAVE FLUSH OR INSET GIRTS.

CC0005

"CLASSIC PANEL" ERECTION NOTES

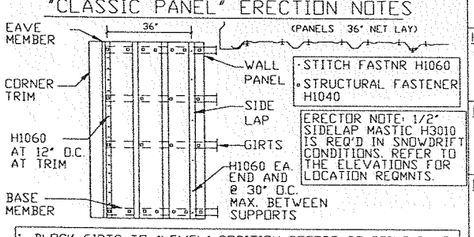

- STITCH FASTNR H1060
- STRUCTURAL FASTENER H1040

ERECTOR NOTE: 1/2" SIDELAP MASTIC H3010 IS REQ'D IN SNOWDRIFT CONDITIONS. REFER TO THE ELEVATIONS FOR LOCATION REQMNTS.

1. BLOCK GIRTS TO "LEVEL" POSITION BEFORE STARTING PANEL ERECTION. MAINTAIN WOOD BLOCKING (NOT BY MBS) UNTIL PANEL TO STRUCTURAL FASTENERS ARE INSTALLED.
2. ALIGN AND PLUMB FIRST WALL PANEL.
3. TO PREVENT "OIL-CANNING", ALL PANEL FASTENERS SHOULD START FROM BASE MEMBER AND THEN BE SECURED TO EACH STRUCTURAL GIRT TOWARD THE EAVE.
4. FOUNDATION MUST BE SQUARE, LEVEL, AND CORRECT TO THE OUT-TO-OUT STEEL LINE DIMENSIONS.
5. ERECTION CREW IS TO CLEAN ALL WALL PANELS BEFORE LEAVING JOB SITE.
6. ERECTOR IS TO ERECT PANELS SO THAT SIDELAPS ARE AWAY FROM THE MAIN TRAFFIC AREA'S LINE OF SIGHT.
7. STORE PANELS PROPERLY TO PREVENT MOISTURE. SEE ERECTION MANUAL.

GA0051

STANDARD FASTENER SCHEDULE

H1000 SELF-TAPPING SCREW (GOOF SCREW) 17-14 x 1 1/4" WITH WASHER LONG LIFE FASTENER 3/8" HEAD	H1042 SELF-DRILLING SCREW 12-14 x 7/8" TCP3 W/O WASHER 5/16" HEAD	H1070 SELF-DRILLING SCREW 12-24 x 1 1/2" TCP5 W/O WASHER 5/16" HEAD 1/2" THK MAX DRILLING CAPACITY
H1020 SELF-DRILLING SCREW 1/4-14 x 1 1/4" TCP3 W/O WASHER 5/16" HEAD 3/16" THK MAX DRILLING CAPACITY	H1045 SELF-DRILLING SCREW 12-14 x 2" TCP3 W/O WASHER 5/16" HEAD	H1100 1/8" x 3/16" STAINLESS STEEL BLIND POP RIVET
H1030 SELF-DRILLING SCREW 12-14 x 1 1/4" TCP2 WITH WASHER LONG LIFE FASTENER 5/16" HEAD	H1047 SELF-DRILLING SCREW 12-14 x 2" TCP3 FLAT TOP WITH WASHER 5/16" HEAD	H1110 3/8" STAINLESS GROMMET FASTENER
H1035 SELF-DRILLING SCREW 12-14 x 1 1/2" TCP2 WITH WASHER LONG LIFE FASTENER 5/16" HEAD	H1050 SELF-DRILLING SCREW 1/4-14 x 7/8" TCP1 WITH WASHER LONG LIFE FASTENER 5/16" HEAD	H1220 SELF-DRILLING SCREW 12-14 x 1" TCP3 W/O WASHER PHILLIPS HEAD
H1040 SELF-DRILLING SCREW 12-14 x 1 1/4" TCP2 W/O WASHER 5/16" HEAD	H1060 SELF-DRILLING SCREW 1/4-14 x 7/8" TCP1 W/O WASHER 5/16" HEAD	PRE-DRILL DIAMETERS 3/16" FOR: H1020, H1070 5/32" FOR: H1030, H1035, H1040, H1041, H1042, H1045, H1047, H1220
H1041 SELF-DRILLING SCREW 12-14 x 1 1/4" TCP2 FLAT TOP WITH WASHER 5/16" HEAD	H1061 SELF-DRILLING SCREW 1/4-14 x 7/8" TCP1 FLAT TOP WITH WASHER 5/16" HEAD	1/8" FOR: H1050, H1060, H1061

DA0060

Flying Horse N Golf Barn	RapidsetBuildings.com		
PROJECT	Flying Horse Barn	PHONE: 800.793.8555	
ID	DBS074838C	DETAIL DRAWINGS	
PROJECT ADDRESS	2138 Flying Horse Club Dr. Colorado Springs, CO 80921	DESIGN: Designer	NBS
		DATE: 11/27/20	SHEET 17 OF 20

RECEIVING MATERIALS & FILING CLAIMS

THIS BUILDING IS DESIGNED, MANUFACTURED, AND DELIVERED IN ACCORDANCE WITH MOST RECENT ADDITION OF THE M.B.M.A. METAL BUILDING SYSTEMS MANUAL. CONSULT THE INFORMATION IN THE "COMMON INDUSTRY PRACTICES" SECTION.

CHECK SHIPMENT AGAINST DELIVERY TICKETS DURING UNLOADING.

NOTE ANY DAMAGE OR DISCREPANCIES ON THE DELIVERY TICKETS BEFORE SIGNING AS RECEIVER.

METAL BUILDING SUPPLIER IS NOT RESPONSIBLE FOR CARRIER DAMAGE OR DISCREPANCIES NOT NOTED ON THE DELIVERY TICKETS.

THE CUSTOMER ASSUMES FULL RESPONSIBILITY FOR THE CONDITION OF THIS MATERIAL AFTER DELIVERY BY THE TRUCKING COMPANY.

METAL BUILDING SUPPLIER IS NOT RESPONSIBLE FOR ITEMS ACCEPTED IN QUESTIONABLE CONDITION.

UPON ACCEPTANCE OF SHIPMENT(S), THE CONTRACTOR IS RESPONSIBLE FOR THE PROPER STORAGE AND HANDLING OF MATERIALS AS DESCRIBED IN METAL BUILDING SUPPLIER'S DOCUMENTATION.

METAL BUILDING SUPPLIER IS NOT RESPONSIBLE FOR INJURY, DAMAGE, OR LOSS AS A RESULT OF IMPROPER STORAGE AND/OR HANDLING.

ALL CLAIMS MUST BE FILED WITH METAL BUILDING SUPPLIER'S QUALITY SERVICES REPRESENTATIVE PRIOR TO ANY FIELD MODIFICATIONS OR PURCHASES THAT MAY RESULT IN A CHARGE TO METAL BUILDING SUPPLIER.

HANDLING MATERIALS

WALL PANELS ARE ROLLED AND BANDED, WITH A COVER PANEL PLACED TOP AND BOTTOM.

PANEL BUNDLE WEIGHT CAN BE FOUND ON I.D. TAG AT LOW END OF EACH BUNDLE. MAXIMUM WEIGHT IS 4,300 POUNDS.

BUNDLES UP TO 25 FEET CAN BE HANDLED USING A FORKLIFT. FORKS MUST BE SPACED A MINIMUM OF FIVE FEET APART.

BUNDLES OVER 25 FEET SHOULD BE HANDLED WITH A CRANE USING A SPREADER BAR AND NYLON SLINGS. LIFTING SHOULD OCCUR AT CENTER OF GRAVITY.

LOCATE SLINGS AT 1/4 OF THE LENGTH OF THE PANEL FROM EACH END OF THE BUNDLE.

TRIM CRATES/BOXES ARE TO BE HANDLED THE SAME AS PANEL BUNDLES.

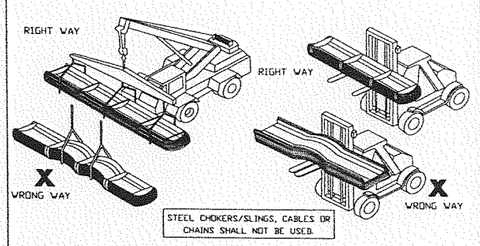

STORING MATERIALS

PANEL AND TRIM BUNDLES / CRATES SHOULD BE BLOCKED 12 INCHES ABOVE GRADE AND ELEVATE ONE END TO ALLOW MOISTURE TO DRAIN. IF THE PANELS ARE WET, THE BUNDLES SHOULD BE OPENED AND THEN THE PANELS SHOULD BE DRIED AND RE-STACKED TO PREVENT DAMAGE.

LOOSELY COVER WITH WATERPROOF TARP TO ALLOW PROPER AIR CIRCULATION. INSPECT DAILY AND DRY IF NECESSARY.

ACCESSORIES MUST BE KEPT DRY AND FREE OF CONTAMINATION. STORE INDOORS IF POSSIBLE.

IMPORTANT NOTE: THE FINISH ON THESE PANELS MAY NOT PERFORM AS INTENDED IF NOT ERECTED WITHIN DAYS FROM RECEIPT AT THE JOB SITE. THE FINISH IS ALSO SUBJECT TO SEVERE DAMAGE IF MOISTURE, DEBRIS, OR DUST IS ALLOWED TO GET BETWEEN THE PANELS; THEREFORE, PANELS MUST BE STORED UNDER COVER WITH ONE END ELEVATED TO ALLOW FOR DRAINAGE AND PROTECTION AGAINST MOISTURE, DUST, OR DEBRIS UNTIL ERECTED. THE MANUFACTURER WILL NOT ACCEPT CLAIMS FOR NON-PERFORMING PANELS IF NOT PROPERLY STORED AT THE JOBSITE. THE CUSTOMER ASSUMES FULL RESPONSIBILITY FOR THE CONDITION OF THIS MATERIAL AFTER DELIVERY BY THE TRUCKING COMPANY.

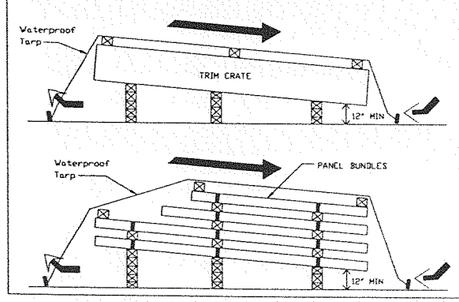

BUILDING & PANEL PREPARATION

STEP 1: PLUMB AND SQUARE

THE FIRST STEP IN THE SUCCESSFUL INSTALLATION OF WALL PANELS IS TO HAVE THE PRIMARY FRAMING PLUMB AND SQUARE. FOR BEST RESULTS, IT IS RECOMMENDED THAT A TRANSIT BE USED WHEN ERECTING THE STRUCTURAL STEEL. MAKE SURE THAT THE FOUNDATION AND BUILDING STRUCTURE IS SQUARE, LEVEL, AND CORRECT TO THE OUT-TO-OUT STEEL LINE DIMENSIONS.

SEE FIGURE "A"

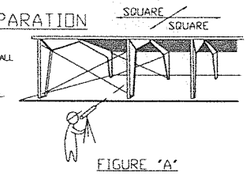

FIGURE "A"

STEP 2: GIRT BLOCKING

BLOCK GIRTS TO "LEVEL" POSITION BEFORE STARTING THE WALL SHEETING OR INSULATION. CHECK TO BE SURE THAT THE EAVE STRUT AND GIRTS ARE STRAIGHT AND PLUMB TO ALIGN THE GIRTS, CUT TEMPORARY WOOD BLOCKING TO THE PROPER LENGTH AND INSTALL BETWEEN THE LINES OF GIRTS. THIS BLOCKING CAN BE MOVED FROM BAY TO BAY WHICH WILL REDUCE THE NUMBER OF PIECES REQUIRED. NORMALLY, ONE LINE OF BLOCKING PER BAY WILL BE SUFFICIENT BUT WIDER BAYS MAY REQUIRE MORE. IT IS RECOMMENDED TO BLOCK AT LEAST TWO BAYS AND LEAP FROG THE BLOCKING AS A BAY IS SHEETED. BLOCKING SHOULD NOT BE REMOVED UNTIL THE FULL BAY HAS BEEN SHEETED.

SEE FIGURE "B"

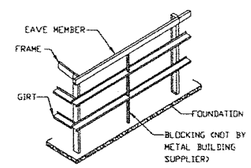

FIGURE "B"

STEP 3: PRE-DRILL PANEL LAP

STACK PANELS WITH ENDS FLUSH ON A LEVEL PLACE ON THE GROUND IN PILES NOT EXCEEDING 10 PANELS. THEN PLACE SMALL WOODEN BLOCKS UNDER SIDE LAPPING EDGE OF STACK OF PANELS TO HOLD THEM AT CORRECT HEIGHT AND POSITION WHILE DRILLING FASTENER HOLES. HOLD PANELS TIGHTLY TOGETHER AT EACH END WITH CLAMPING PLIARS. CAREFULLY MARK POSITIONS FOR SIDELAP FASTENERS ON TOP OF HIGH RIB. FASTENERS SHOULD BE LOCATED "ON CENTER" OF HIGH RIB. DRILL HOLES FOR "STITCH" FASTENER (USE #1,-7/32" - 15/64" DRILL-BIT) ON TOP SHEET OF SIDELAP. BE SURE PANELS ARE WELL NESTED BEFORE DRILLING.

SEE FIGURE "C"

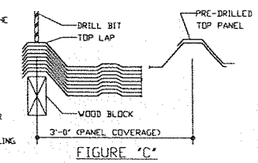

FIGURE "C"

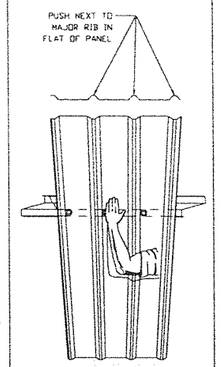

FIGURE "E"

• H1060 STITCH FASTENER
□ H1040 STRUCTURAL FASTENER

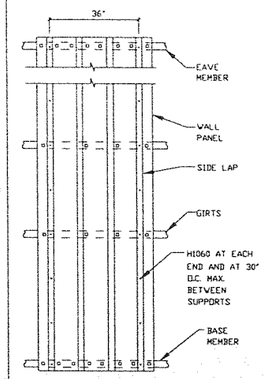

CLASSIC
WALL PANEL ERECTION DETAIL

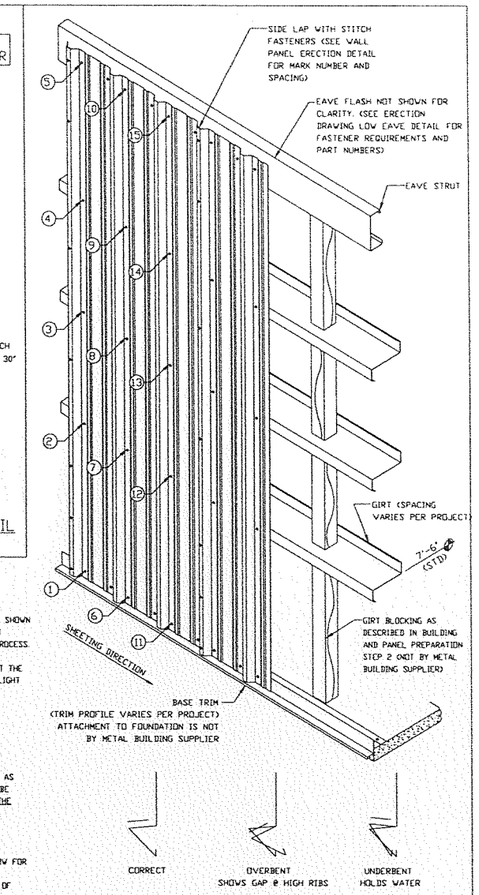

NOTE: BASE TRIM PROFILES ARE MANUFACTURED WITH A 5° SLOPE TO PROMOTE WATER SHED. ENSURE SLOPE IS PRESENT TO PREVENT HOLDING WATER. DO NOT ALLOW WEIGHT OF PANEL TO OVERBEND TRIMCREATING LARGER GAP AT RIB OF PANEL.

FIGURE "D"

FIELD CUTTING PANELS

WHEN FIELD CUTTING OR MITERING WALL PANELS, NON-ABRASIVE CUTTING TOOLS SUCH AS NIBBLERS OR TIN-SNIPS SHALL BE USED. ABRASIVE CUTTING TOOLS SUCH AS MECHANICAL GRINDERS OR POWER SAWS CAN DAMAGE THE MATERIAL FINISH AND CREATE EXCESS METAL SHAVINGS THAT CAN CORRODE THE PANELS. THE USE OF NON-APPROVED CUTTING DEVICES MAY VOID THE FACTORY WARRANTY.

ANY METAL SHAVINGS THAT ARE CREATED NEED TO BE CLEANED FROM THE PANEL TO PREVENT SCRATCHING AND/OR CORROSION. THE MANUFACTURER WILL NOT ACCEPT CLAIMS FOR DAMAGE/DETERIORATION DUE TO USE OF UNAPPROVED TOOLS.

FASTENER INSTALLATION

RECOMMENDED TOOL TYPES: SEE ALSO FASTENER SCHEDULE
4 AMP OR HIGHER RATED TOOLS (DO NOT USE IMPACTING TOOLS)
2000 - 2500 RPM SCREW GUN WITH TORQUE ADJUSTABLE CLUTCH
MANUAL OR ELECTRIC RIVET TOOL

DO NOT USE IMPACTING TOOLS
TO ASSURE PROPER VOLTAGE TO THE TOOL, EXTENSION CORDS SHOULD BE CHECKED FOR PROPER WIRE SIZE/CORD LENGTH.

16 GAGE WIRE, MAXIMUM CORD LENGTH = 100'
14 GAGE WIRE, MAXIMUM CORD LENGTH = 200'
12 GAGE WIRE, MAXIMUM CORD LENGTH = 300'

DRIVING TIPS:
SET THE NUT DRIVER AS DESCRIBED BELOW PRIOR TO INSTALLING FASTENERS TO PREVENT FASTENER WOBBLE.

COMPRESS THE INSULATION AT FASTENER LOCATION WITH ONE HAND WHILE DRIVING THE FASTENER WITH THE OTHER. THIS WILL HELP KEEP THE PANEL FLAT AND PREVENT THE FASTENER FROM TWALKING!. DRIVE FASTENERS PERPENDICULAR TO PANEL SURFACE.

EXCESSIVE PRESSURE CAN CAUSE DRILL POINT FAILURE. LET THE FASTENER DO THE WORK.

DO NOT OVER TIGHTEN FASTENERS AS THIS WILL LEAD TO PANEL DIMPLING AND DISTORTION.

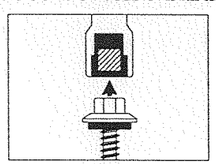

1. PUT THE TOP OF THE FASTENER INTO THE NUT DRIVER. NOTE: FOR PAINTED FASTENERS, PLACE A SINGLE OR DOUBLED LAYER OF PLASTIC BETWEEN THE FASTENER HEAD AND THE NUT DRIVER.

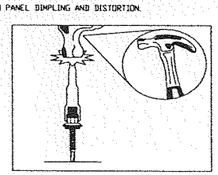

2. PLACE THE POINT OF THE FASTENER ONTO A HARD SURFACE AND FIRMLY HIT THE TOP OF THE NUT DRIVER 2-3 TIMES.

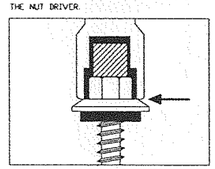

3. THE BASE OF THE NUT DRIVER SHOULD NOW BE CONTACTING THE TOP OF THE HEAD OF THE FASTENER WITH NO GAPS.

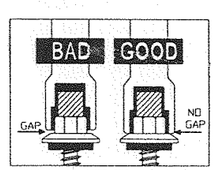

4. BAD SET VS. GOOD SET.

PANEL INSTALLATION & FASTENER SEQUENCE

STEP 1: INSTALL FIRST PANEL
INSTALL THE FIRST WALL PANEL AT THE BUILDING CORNER AND ALIGN THE PANEL RIB WITH THE STEEL LINE AS SHOWN IN THE CORNER DETAILS USING THE START/FINISH DIMENSION SHOWN ON THE PLAN. IT IS EXTREMELY IMPORTANT THAT THE FIRST WALL PANEL IS INSTALLED PLUMB AND SQUARE. USE A LEVEL OR A TRANSIT TO AID IN THIS PROCESS.

PLACE A 1/8" SHIM ON THE BASE TRIM UNDER THE PANEL TO HOLD THE PANEL OFF THE BASE TRIM. ENSURE THAT THE WEIGHT OF THE PANEL DOES NOT FORCE BASE TRIM TO EXCESSIVELY BEND DOWN. BASE TRIM SHOULD HAVE A SLIGHT SLOPE TO ALLOW WATER TO RUN OUT AND NOT SIT ON BASE TRIM.

SEE FIGURE "D" - TO RIGHT

WHEN INSTALLING THE PANEL, APPLY PRESSURE EVENLY TO AVOID DISTORTING THE PANEL AND CAUSING OIL CANNING.

SEE FIGURE "E" - ABOVE

RECOMMENDED PANEL FASTENING SEQUENCE IS SHOWN TO THE RIGHT. THIS PATTERN AIDS IN PLUMBING AS WELL AS MAINTAINING PANEL COVERAGE / MODULARITY. SOME APPLICATIONS MAY REQUIRE MODIFIED SEQUENCE AND WILL BE BEST DETERMINED IN THE FIELD. DO NOT ATTACH PANEL AT BASE AND TOP AND WORK TOWARD THE MIDDLE OF THE PANEL. THIS CREATES OIL CANNING. MANUFACTURER IS NOT RESPONSIBLE FOR FINAL APPEARANCE OF INSTALLED PANEL.

STEP 2: INSTALL SUBSEQUENT PANELS
INSTALL THE SECOND PANEL BY LAYING THE LAP EDGE OVER THE BEARING RIB OF THE FIRST PANEL. SEE BELOW FOR PROPER ALIGNMENT AT SIDELAP. CHECK PANEL PLUMBNESS AND FASTEN PANEL IN THE SAME SEQUENCE STARTING WITH THE STRUCTURAL FASTENERS ALONG THE LAP TO ENSURE A TIGHT SIDELAP. CONTINUE FOR THE REMAINDER OF THE WALL, CUTTING PANELS AROUND FRAMED OPENINGS AS REQUIRED. (TRIM SHOULD BE INSTALLED AROUND OPENINGS PRIOR TO INSTALLING PANEL)

RECOMMENDED TIPS:
WALL PANELS CAN BE INSTALLED LEFT TO RIGHT OR RIGHT TO LEFT. IT IS RECOMMENDED TO INSTALL SHEETS STARTING OPPOSITE THE PREVAILING VIEW / WIND SO THAT THE SIDELAP SEAM IS AWAY AND LESS NOTICEABLE.

PANEL ORIENTATION AND ALIGNMENT

NOTE THE ORIENTATION OF THE PROFILE AND BEARING LEG FOR THE LEADING EDGE OF THE PANEL. PANELS SHOULD BE INSTALLED AS SHOWN BELOW TO HELP MAINTAIN PANEL MODULARITY / COVERAGE FOR THE LENGTH OF THE WALL.

ABC - LONGSPAN III
CBC - R-PANEL
KBS - KIRBYRIB II
NBS - CLASSIC WALL

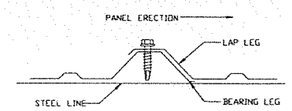

ABC - ARCHITECTURAL V
CBC - A-PANEL
KBS - KIRBYWALL
NBS - ACCENT PANEL

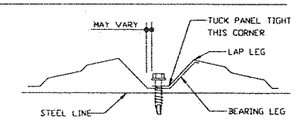

ABC - ARCHITECTURAL III
CBC - REVERSE R-PANEL
KBS - KIRBY REVERSED ROLL
NBS - REVERSE CLASSIC WALL

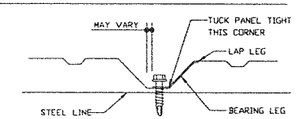

BASE TRIM LAP SEALANT

AT BASE TRIM LAPS, APPLY A BEAD OF POLYURETHANE TUBE CAULK (H3152) TO ALL ADJOINING SURFACES AND LAP 1". SEE BASE TRIM DETAIL FOR THE SPECIFIC TRIM FOR YOUR PROJECT.

IF JOB HAS OPTIONAL FOAM PANEL CLOSURES ORDERED AT BASE, ATTACH TO INSIDE OF WALL PANEL AT BASE AND FASTEN THROUGH PANEL AND CLOSURE, INTO BASE TRIM. FASTENING PATTERN WILL VARY PER WALL PANEL TYPE. REFER TO THE WALL PANEL ERECTION DETAIL FOR MORE FASTENING INFO.

USE SUPPLIED BASE CORNER PIECES OR FIELD MITRE BASE TRIM AT CORNERS.

INSULATION HINT: AT THE BASE, FOLD THE INSULATION VAPOR BARRIER OVER THE FIBER TO HELP PREVENT WATER FROM WICKING.

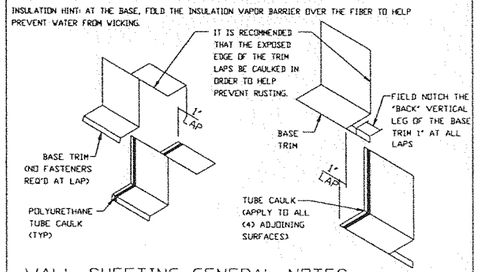

WALL SHEETING GENERAL NOTES

TRIM_698

Flying Horse N Golf Barn	RapidsetBuildings.com		
PROJECT	Flying Horse Barn	PHONE: 800.793.8555	
ID	DBS074B38C	DETAIL DRAWINGS	
PROJECT ADDRESS	2138 Flying Horse Club Dr. Colorado Springs, CO 80921	DESIGN Designer	NBS
		DATE: 11/27/20	SHEET 18 OF 20

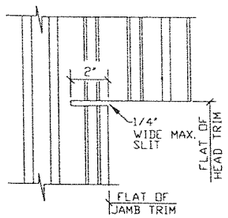

PANEL SLIT
STEP 3

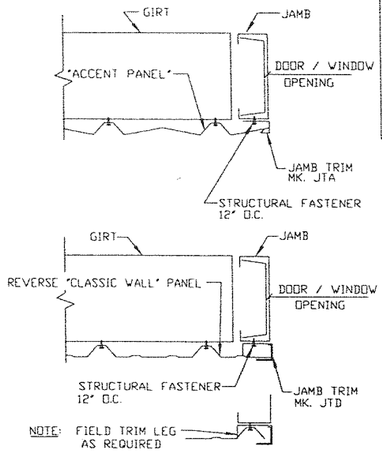

ALTERNATE DETAIL 1

FASTENER KEY

STITCH FASTENER = H106_
STRUCTURAL FASTENER = H104_
WITH COLD-FORM
STRUCTURAL FASTENER = H1070
WITH HOT-ROLLED

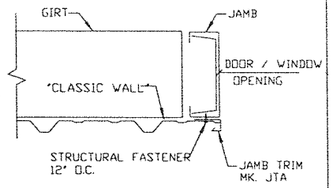

JAMB TRIM
STEP 2

NOTE: FIELD CUT PANELS AS REQUIRED

ERECTOR NOTE:
WHEN SLOT REINFORCEMENT PLATES ARE PRESENT IN 12" COLD-FORMED MEMBERS, ROD/CABLE BRACE MUST UTILIZE REINFORCED SLOT LOCATION.

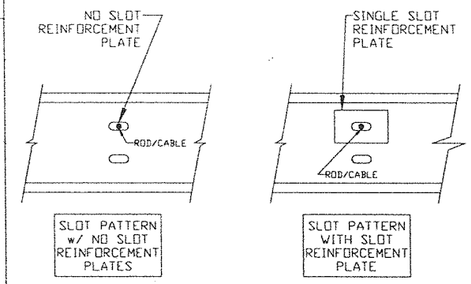

12" COLD-FORMED MEMBER

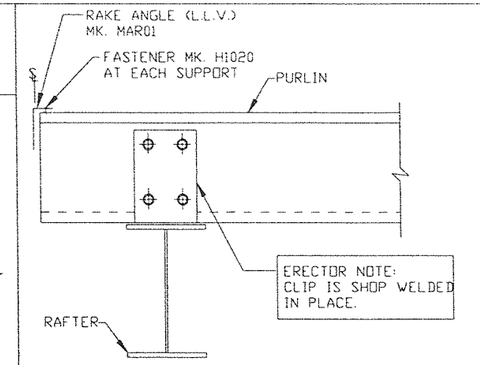

WELDED CLIP @ R/F ENDWALL

USE (4) 1/2" x 1 1/4" A307
BOLTS H0500 / NUTS H0400
REFERENCE ERECTOR NOTE FOR TYPICAL WASHER REQUIREMENTS

A10

BB0050

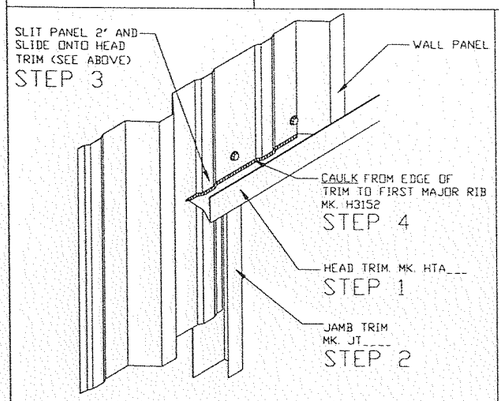

DOOR FRAMED OPENING TRIM DETAIL

FOR ALL STANDARD WALL PANEL TYPES
LEFT HAND SHOWN, RIGHT HAND SIMILAR

TRIM 98

GD0040

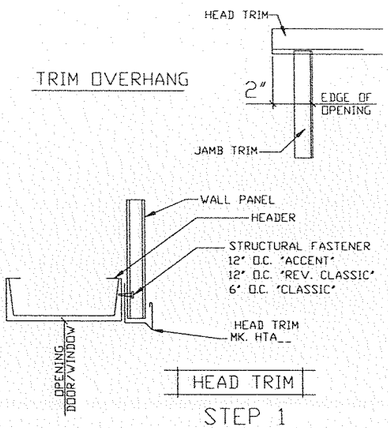

HEAD TRIM
STEP 1

ROD DIAMETER	MARK NUMBER	HILLSIDE WASHERS	FLAT WASHERS	A307/A325 NUTS	COUPLING NUTS
5/8" Ø	RDB ___	(2) H0930	(2) H0210	(2) H0310	H0810
3/4" Ø	RDC ___	(2) H0930	(2) H0220	(2) H0320	H0820
7/8" Ø	RDD ___	(2) H0930	(2) H0230	(2) H0325	H0830
1" Ø	RDE ___	(2) H0960	(2) H0240	(2) H0330	H0840
1 1/8" Ø	RDF ___	(2) H0960	(2) H0250	(2) H0450	H0850
1 1/4" Ø	RDG ___	(2) H0960	(2) H0260	(2) H0340	H0860

SEE PLANS AND ELEVATIONS FOR BRACING MARK NUMBERS

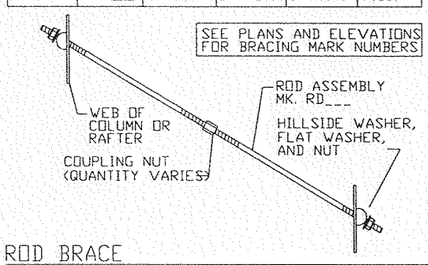

ROD BRACE

WEB TO WEB

Q3

AF0010

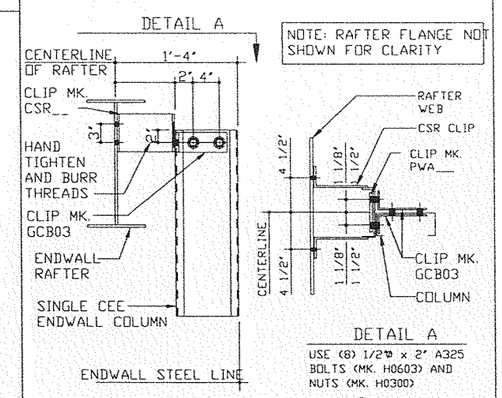

EW COLUMN TO RIGID FRAME RAFTER

REFERENCE ERECTOR NOTE FOR TYPICAL WASHER REQUIREMENTS

B42f

AD0030

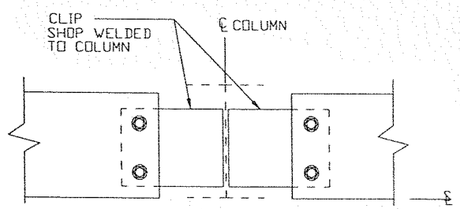

FLUSH GIRT @ INTERIOR BAY COLUMN

USE (4) 1/2" x 1 1/4" A307
BOLTS H0500 / NUTS H0400
REFERENCE ERECTOR NOTE FOR TYPICAL WASHER REQUIREMENTS

C4p

GIRT CLIP	FRAME OFFSET
GCC03	1'-4"
GCC12	1'-0"
GCC14	1'-2"
GCC20	1'-8"
GCC21	1'-9"
GCC04	2'-6"

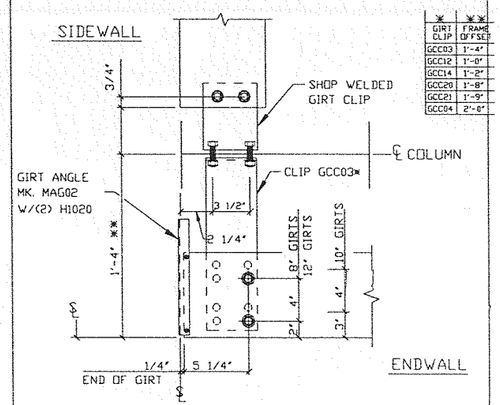

FLUSH SIDEWALL GIRT AT RF CORNER

USE (6) 1/2" x 1 1/4" A307
BOLTS H0500 / NUTS H0400
REFERENCE ERECTOR NOTE FOR TYPICAL WASHER REQUIREMENTS

D14p

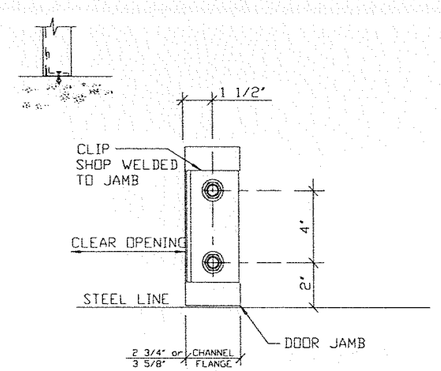

JAMB TO FINISHED FLOOR

ATTACHMENT TO SLAB BY OTHERS

E9

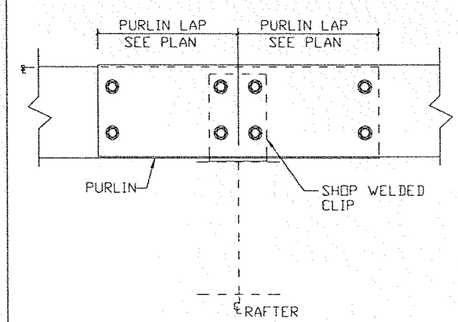

PURLIN TO INTERIOR FRAME RAFTER

USE (8) 1/2" x 1 1/4" A307
BOLTS H0500 / NUTS H0400
REFERENCE ERECTOR NOTE FOR TYPICAL WASHER REQUIREMENTS

G2

BB0050

Flying Horse N Golf Barn		RapidsetBuildings.com	
PROJECT	Flying Horse Barn	PHONE: 800.793.8555	
ID	DBS074B3BC	DETAIL DRAWINGS	
PROJECT ADDRESS	2138 Flying Horse Club Dr. Colorado Springs, CO 80921	DESIGN Designer	NBS
		DATE: 11/27/20	SHEET 19 OF 20

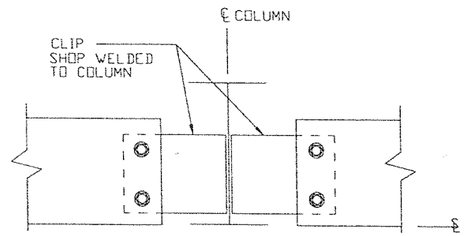

FLUSH GIRT AT INTERIOR BAY

USE (4) 1/2" x 1 1/4" A307
BOLTS H0500 / NUTS H0400
REFERENCE ERECTOR NOTE FOR TYPICAL WASHER REQUIREMENTS

H6p

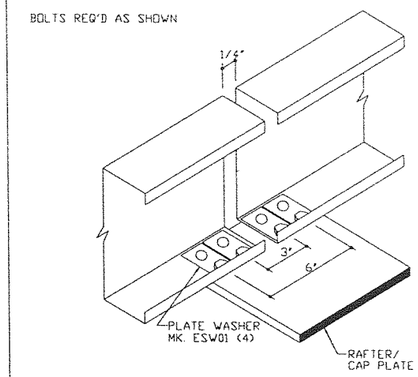

BA0010

LOW EAVE EAVE STRUT AT FLUSH GIRTS

USE (4) 1/2" x 2" A325 BOLTS H0603 / NUTS H0300
REFERENCE ERECTOR NOTE FOR TYPICAL WASHER REQUIREMENTS

J1f

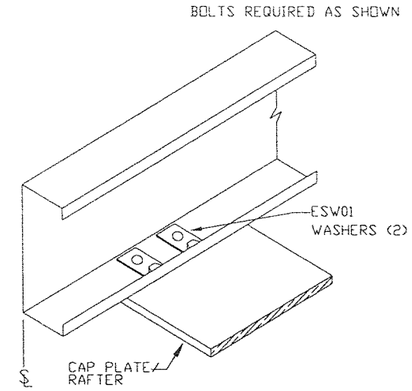

LOW EAVE EAVE STRUT

USE (4) 1/2" x 1 1/4" A325 BOLTS H0603 / NUTS H0300
REFERENCE ERECTOR NOTE FOR TYPICAL WASHER REQUIREMENTS

J23

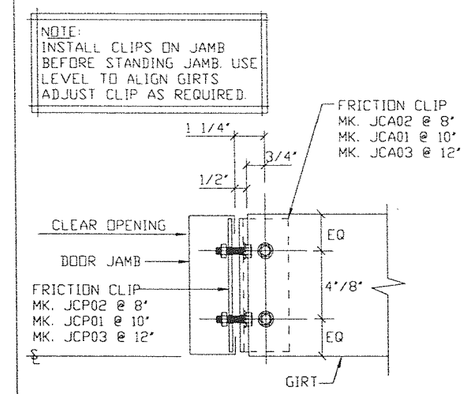

CG0060

GIRT TO JAMB

USE (4) 1/2" x 1 1/4" A307
BOLTS H0500 / NUTS H0400
REFERENCE ERECTOR NOTE FOR TYPICAL WASHER REQUIREMENTS

K1

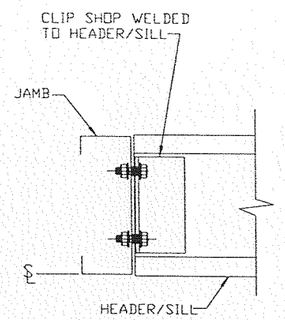

HEADER/SILL TO JAMB

USE (2) 1/2" x 1 1/4" A307 BOLTS H0500 / NUTS H0400
REFERENCE ERECTOR NOTE FOR TYPICAL WASHER REQUIREMENTS

M3

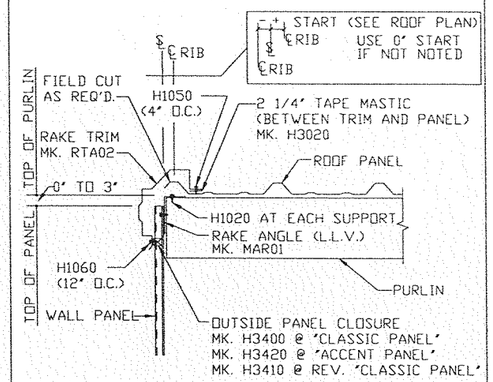

DC0010

SCULPTURED RAKE AT "CLASSIC" ROOF

SEE WALL SHEETING ERECTION NOTES FOR FASTENER LOCATIONS

TRIM_2

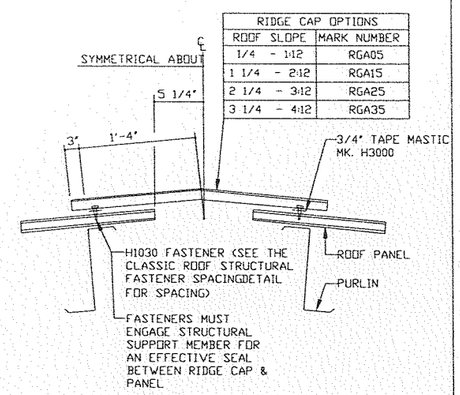

RIDGE CAP OPTIONS	
ROOF SLOPE	MARK NUMBER
1/4 - 1:12	RGA05
1 1/4 - 2:12	RGA15
2 1/4 - 3:12	RGA25
3 1/4 - 4:12	RGA35

DG0011

DIE-FORMED RIDGE AT "CLASSIC" ROOF

TRIM_3

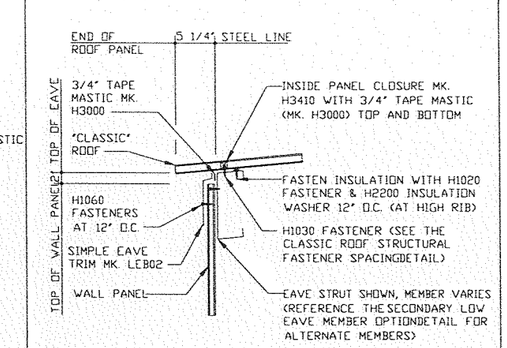

DB0010

SIMPLE EAVE AT "CLASSIC" ROOF

SEE WALL SHEETING ERECTION NOTES FOR FASTENER LOCATIONS

TRIM_5

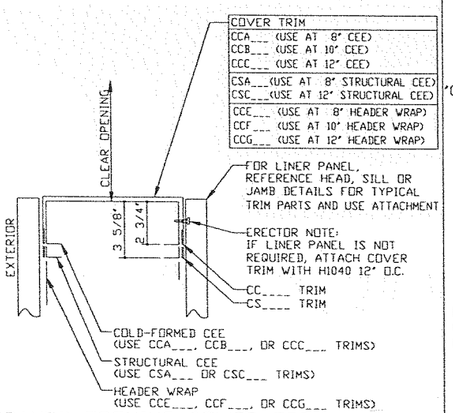

GD0005

FRAMED OPENING COVER TRIM

SILL SHOWN, HEADER AND JAMBS SIMILAR

TRIM_19

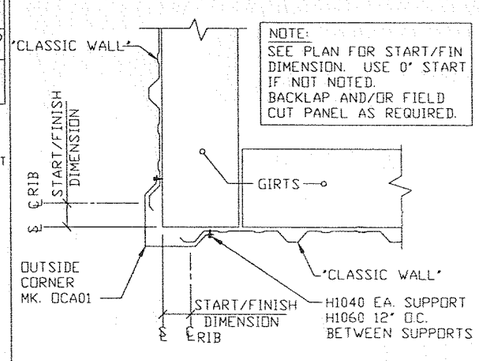

GC0021

OUTSIDE CORNER TRIM

WITH "CLASSIC" WALL PANEL

TRIM_79

ERECTOR NOTE:
UNTIL WALL PANELS ARE INSTALLED, (3) H1040 SCREWS ARE TO
BE USED FOR TEMPORARY INSTALLATION OF THE BASE TRIM.

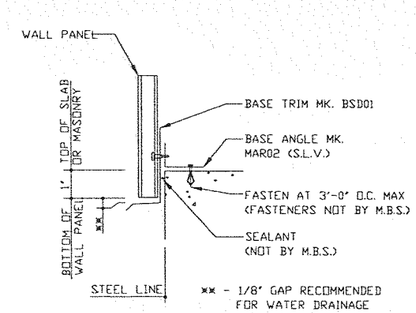

GB0040

BASE TRIM WITH ANGLE

SEE WALL PANEL ERECTION NOTES FOR FASTENER LOCATIONS
** - 1/8" GAP RECOMMENDED FOR WATER DRAINAGE

TRIM_200

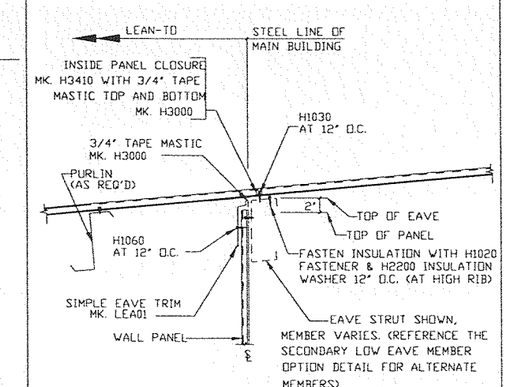

AT-EAVE LEAN-TO with PANEL BELOW

SEE WALL SHEETING ERECTION NOTES FOR FASTENER SPACING

TRIM_734

Flying Horse N Golf Barn		RapidsetBuildings.com	
PROJECT	Flying Horse Barn	PHONE: 800.793.8555	
ID	DBS074838C	DETAIL DRAWINGS	
PROJECT ADDRESS	2138 Flying Horse Club Dr Colorado Springs, CO 80921	DESIGN: Designer	NBS
		DATE: 11/27/20	SHEET 20 OF 20

BUILDER/CONTRACTOR RESPONSIBILITIES

It is the responsibility of the BUILDER/CONTRACTOR to ensure that all project plans and specifications comply with the applicable requirements of any governing building authorities. The supplying of sealed engineering data and drawings for the metal building system does not imply or constitute an agreement that the building manufacturer or its design engineer is acting as the engineer of record or design professional for a construction project.

The contractor must secure all required approvals and permits from the appropriate agency as required.

Approval of drawings and calculations indicate that the building manufacturer correctly interpreted and applied the requirements of the contract drawings and specifications (Sect. 4.2.1 AISC code of standard practices, 9th. edition.)

Where discrepancies exist between the manufacturer's structural steel plans and the plans for other trades, the structural steel plans shall govern (Sect. 3.3 AISC code of standard practices 9th. ed).

Design considerations of any materials in the structure which are not furnished by the building manufacturer/supplier are the responsibility of the contractors and engineers other than the building manufacturer/supplier's engineer unless specifically indicated.

The contractor is responsible for all erection of steel and associated work in compliance with the building manufacturer's 'for construction' drawings.

Products shipped to builder or his customer shall be inspected immediately upon arrival. Claims for shortages or defective material if not packaged must be mailed to RapidsetBuildings.com in writing within five (5) days after the builder learns of the defect. The manufacturer/ RapidsetBuildings.com shall not be liable for any defect unless claim is made within one (1) year after date of the original shipment by the manufacturer to the builder or his customer. RapidsetBuildings.com will be given a reasonable opportunity to inspect defective materials upon receipt of claim by builder.

If a defect is of such nature that it can be remedied by a field operation at the job site without the necessity of returning the material to the manufacturer, then upon written authorization of the manufacturer the builder may repair or cause the material to be repaired and the manufacturer will reimburse the builder for the cost of the repair in accordance with the written authorization.

All bracing as shown and provided by the manufacturer for this building is required and shall be installed by the erector as a permanent part of the structure.

Temporary supports, such as temporary guys, braces, false work, cribbing or other elements required for the erection operation will be determined and furnished and installed by the erector. These temporary supports will secure the steel framing or any partly assembled steel framing against loads comparable in intensity to those for which the structure was designed, resulting from wind, seismic forces and erection operations, but not the loads resulting from the performance of work by or the acts of others, nor such unpredictable loads as those due to tornado, explosion or collision (Sect. 7.9.1 AISC code of standard practices, 9th. edition.)

Design of gutter and downspout is a function of the rainfall intensity and area to be drained. Design parameters utilized are in accordance with the 1986 low rise building system manual and/or the 9th edition of the architectural graphic standards, as applicable. Proper owner maintenance dictates that the drainage system be kept free and clear of debris and/or ice at all times to ensure proper function of the gutter and downspout. In those cases where the owner/tenant of a property is unwilling or unable to provide proper maintenance, elimination of gutter should be considered as an alternative.

APPROVAL NOTES

The following conditions may apply in the event that these drawings are used as approval drawings:

A). It is imperative that any changes to these drawings:
   1) Be made in contrasting ink and surrounded by 'clouding'.
   2) Have all instances of change clearly indicated.
   3) Be legible and unambiguous.

B). Dated signature is required on all pages.

C). RapidsetBuildings.com reserves the right to resubmit drawings with extensive or complex changes required to avoid misfabrication. This may impact the delivery schedule.

D). Any changes noted on the drawings not in conformance with the terms and requirements of the contract between RapidsetBuildings.com and its customer are not binding on RapidsetBuildings.com unless subsequently specifically acknowledged and agreed to in writing by change order or separate documentation. RapidsetBuildings.com recognizes that rubber stamps are routinely used for indicating approval, disapproval, rejection or mere review of the drawings submitted. However, RapidsetBuildings.com does not accept changes or additions to contractual terms and conditions that may appear with use of a stamp or similar indication of approval, disapproval, etc.. Such language applied to the drawings of RapidsetBuildings.com by the customer, architect, engineer, or any other party will be considered as unacceptable alterations to these drawing notes, and will not alter the contractual rights and obligations existing between RapidsetBuildings.com and its customer.

Drawing Status:

- [ ] For Approval: these drawings, being for approval, are by definition not final, and are for conceptual representation only. Their purpose is to confirm proper interpretation of the project documents. Only drawings issued 'for construction' can be considered complete.
- [ ] For Permit: These drawings, being for permit, are by definition not final in that, as a minimum, piece markings are not identified. Only drawings issued 'for construction' can be considered as complete.
- [x] For Construction: Final Drawings.

GENERAL NOTES ◇ Rapidset Metal Buildings (TM)

The structure under this contract has been designed and detailed for the loads and conditions stipulated in the contract and shown on these drawings. Any alterations to the structural system or removal of any component parts, or the addition of other construction materials or loads must be done under the advice and direction of a registered architect, civil or structural engineer. The building manufacturer will assume no responsibility for any loads not indicated.

This metal building is designed with the building manufacturer's standard practices which are based on pertinent procedures and recommendations of the following organizations and codes.

1. American Institute of Steel Construction: 'Specification for the Design, Fabrication and Erection of Structural Steel for Buildings.'
2. American Iron and Steel Institute: 'Specification for the Design of Cold Formed Steel Structural Members'.
3. American Welding Society: 'Structural Welding Code' AWS D1.1.
4. Metal Building Manufacturer's Association: 'Low Rise Building Systems Manual'
5. International Conference of Building Officials: 'Uniform Building Code'
6. Southern Building Code Congress International: 'Standard Building Code'
7. Building Official and Code Administrators International: 'BOCA National Building Code'
8. National Building Code of Canada.
9. International Building Code

Material properties of steel plate used in the fabrication of primary rigid frames, and other primary structural exclusive of cold formed sections, conform to ASTM-A529 or A-572. Flanges with thickness of 1' or less and width of 12' or less conform to A-529 with a minimum yield point of 55,000 PSI. Web material conforms to ASTM-A36 modified with a minimum yield point of 46,000 PSI.

Material properties of pipe sections conform to ASTM-A53 type E, grade B with a minimum yield point of 35,000 PSI.

Material properties of hot rolled steel members conform to the requirements of ASTM-A36 or A572 with a minimum yield point of 50,000 PSI.

Material properties of cold formed light gage steel members conform to ASTM-A570 or A607 grade 55 modified with a minimum yield point of 57,000 PSI.

Material properties of roof/wall sheeting, base metal conform to ASTM-A792 grades D or E with minimum yield points of 50,000 PSI and 80,000 PSI respectively, as required by design. Coating of base material is 55% aluminum-zinc alloy in accordance with AZ55 specifications.

Cable utilized for bracing conforms to ASTM A475. Cable bracing is to be installed to a taut condition with all slack removed.

Rod and angle utilized for bracing members conform to ASTM A36.

Structural joints with A.S.T.M. A-325 high strength bolts, where indicated on the drawings, shall be assembled and the fasteners tightened in accordance with 'turn of nut' method as described in the specification for structural joints using A.S.T.M. A-325 or A-490 bolts (11-18-35), unless otherwise noted. All joints will be assembled without washers unless otherwise noted.

All steel members except bolts, fasteners and cable shall receive one shop coat of iron oxide corrosion inhibitive primer, meeting the performance requirements of TIP-636.

Shop and field inspections and associated fees are the responsibility of the contractor, unless stipulated otherwise in the contract.

The metal building manufacturers will identify primary structural steel with a minimum yield point greater than 36,000 PSI by means of a sticker near the erection mark on each shipped piece. Secondary members with a yield point equal to or greater than 33,000 PSI shall be identified by means of a sticker near the erection mark on each shipped piece. (This is in accordance with the 1997 UBC section 2203, subsection 2203.2 and 2203.3.)

PRIMER

Shop primer paint is a rust inhibitive primer which meets or exceeds the end performance of federal specifications TT-P-636c and TT-P-664 and is a red oxide primer. This primer is not intended for long term exposure to the elements. RapidsetBuildings.com is not responsible for any deterioration of the shop primer as a result of improper handling and/or storage. RapidsetBuildings.com shall not be responsible for any field-applied paint and/or coatings. (Section 6.5 AISC Code of Standard Practice, 9th ED.)

A325 BOLT TIGHTENING REQUIREMENTS

All high strength bolts are A325-N unless specifically noted otherwise. Structural bolts shall be tightened by the turn of nut method in accordance with the 9th edition of the 'AISC Steel Construction Manual'. A325 bolts are supplied without washers unless noted otherwise.
All bolted connections are designed as bearing type connections with the bolt threads included in the shear plane.

ERECTION NOTE: (ERECTION AND UNLOADING NOT BY RapidsetBuildings.com)

All bracing shown and provided by RapidsetBuildings.com for this building is required and shall be installed by the erector as a permanent part of the structure. If additional bracing is required for stability during erection, it shall be the erector's responsibility to determine the amount of such bracing and to procure and install as needed.

SHORTAGES (SEE MBMA 5.2.1)

The quantity of crates and structural items shipped shall be checked and any shortages or other discrepancies with respect thereto, shall be reported to RapidsetBuildings.com on the day of delivery and such discrepancy confirmed in writing within seven (7) days. With respect to items or quantities within unopened crates and any latent defects, it shall be the duty of the purchaser to notify RapidsetBuildings.com on the date such defect or shortage is discovered and confirm such notice in writing to RapidsetBuildings.com within (7) days thereof.

CORRECTIONS OF ERRORS AND REPAIRS (SEE MBMA 6.10)

Claims for correction of alleged misfits will be disallowed unless RapidsetBuildings.com shall have received prior notice thereof and allowed reasonable inspection of such misfits. The correction of minor misfits by use of drift pins to draw the components into line, moderate amounts of reaming, chipping and cutting, and the replacement of minor shortages of material are a normal part of erection and are not subject to claim, no part of the building may be returned for alleged misfits without the prior approval of RapidsetBuildings.com.

FIELD WORK SUMMARY

1. Walk doors and windows will need to be 'cut in.' Check for bracing on the plan before locations are determined.

2. For a pitched roof, the top of the panels on the rake side will need to be clipped in order for the rake trim to fit.

3. Slots will need to be cut in the appropriate girts to accommodate the cables or rods where such bracing will be used.

SAFETY◇Rapidset Metal Buildings (TM)

The building manufacturer/supplier has a commitment to manufacture quality building components that can be safely erected. However, the safety commitment and job site practices of the erector are beyond the control of the building manufacturer.

The supplier strongly recommends that safe working conditions and accident prevention practices be the top priority of any job site.

Local, state and federal safety and health standards (www.osha.gov) should always be followed to help insure worker safety.

Make certain all employees know the safest and most productive way of erecting a building. Emergency procedures should be known to all employees.

Daily meetings highlighting safety procedures are also recommended.

The use of hard hats, rubber sole shoes for roof work, proper equipment for handling material, and safety nets where applicable are recommended.

BUILDING DATA

WIDTH (ft)	10
LENGTH (ft)	100
EAVE HEIGHT (ft)	10
ROOF SLOPE (rise/12")	
SIDEWALL BAY SPACING	1 at 18.5
LEFT ENDWALL BAY SP	1 at 10
RIGHT ENDWALL BAY SP	1 at 10
ROOF FRAMING	4 at 2.1861 along surface 2
ROOF PANEL TYPE	Classic Roof (PBR)
ROOF PANEL GAUGE	26 GA
INTERIOR FRAMING	1 lean to frame, clear span
WALL PANEL TYPE	
WALL PANEL GAUGE	GA
DEAD LOAD (psf)	2.000
LIVE LOAD (psf)	20.00
REDUCTION ALLOWED	NO
ROOF SNOW LOAD(psf)	60
COLLATERAL LOAD (psf)	0.5
GOVERNING CODE	IBC 15
WIND SPEED (mph)	130
CLOSURE	Open
WIND EXPOSURE	C
WIND IMPORTANCE	1.00
WALL GIRT, MAX. DEFL. L/span	90
ROOF PURLIN, L.L. DEFL. L/span	180
RIGID FRAME HORIZ. DEFL. H/span	60
SEISMIC ZONE/DESIGN CATEGORY	B
SEISMIC COEFF.	0.294
SEISMIC IMPORTANCE	1.00
SEISMIC USE GROUP	
SEISMIC Sds	C0
SEISMIC Sd1	Colorado Springs
ANCHOR BOLTS	BY OTHERS

DRAWING INDEX

ENGINEER STAMP

PROJECT

CUSTOMER	Flying Horse N Golf Barn
PROJECT	Flying Horse Barn
JOB ID	DBS074842C
PROJECT ADDRESS	2138 Flying Horse Club Dr. Colorado Springs, CO 80921
SIZE	10'-0" x 100'-0" x 8'-9" x 10'-0"

RapidsetBuildings.com
3555 N Prospect St. 800.793.8555
Colorado Springs CO 80907

DRAWINGS COVER SHEET (C1) NBS

SCALE: NONE | DATE: 11/27/20 | REV NO.

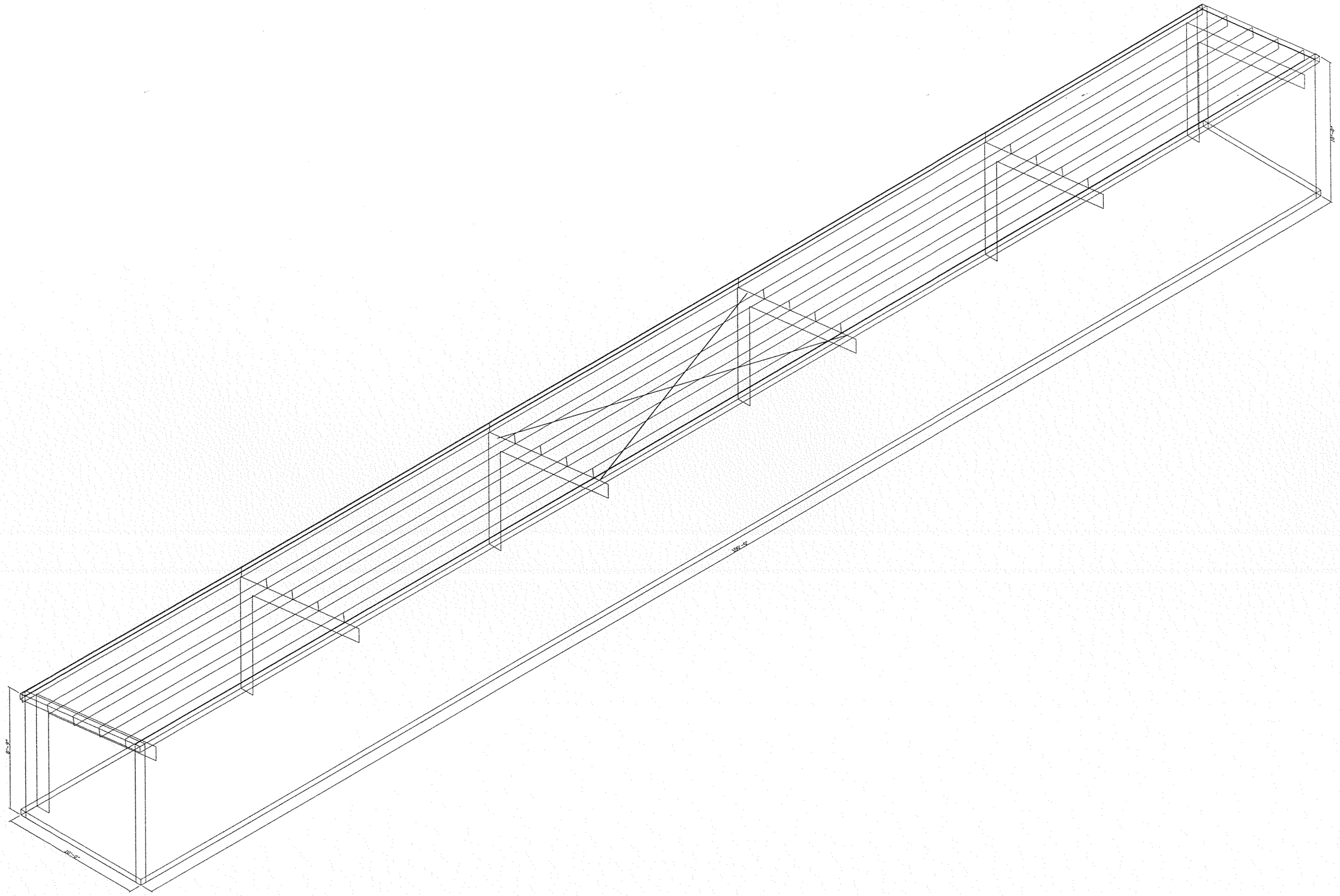
8'-9"
10'-0"
100'-0"
10'-0"

o Dia= 3/4"

ANCHOR BOLT SUMMARY

Qty	Locate	Dia (in)	Type	Proj (in)
O 24	Frame	3/4"	F1554	3.00

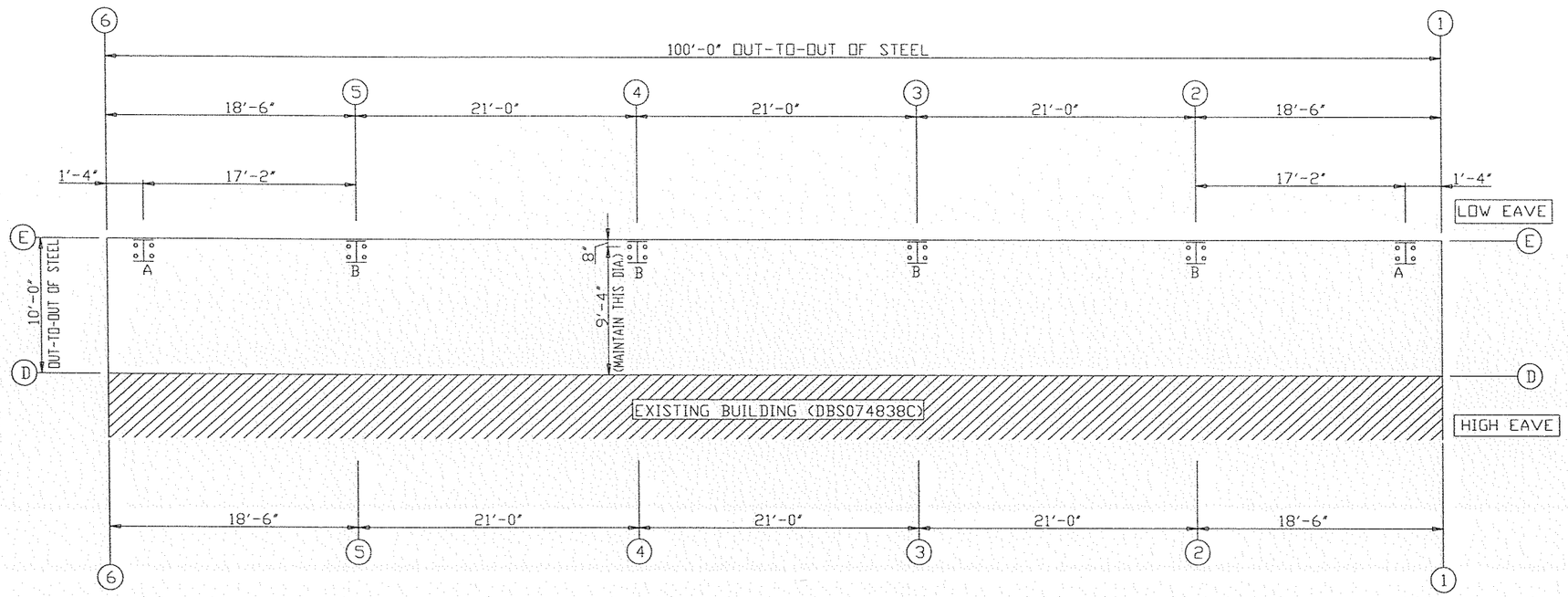

ANCHOR BOLT PLAN

NOTE: All Base Plates @ 100'-0" (U.N.)

THIS DRAWING IS NOT TO SCALE

Flying Horse N Golf Barn		RapidsetBuildings.com	
PROJECT	Flying Horse Barn	PHONE: 800.793.8555	
ID	DBS074842C	ANCHOR BOLT PLAN & REACTIONS	
PROJECT ADDRESS	2138 Flying Horse Club Dr. Colorado Springs, CO 80921	DESIGN: Designer	NBS
		DATE: 11/27/20	SHEET 1 OF 18

Dia= 3/4"

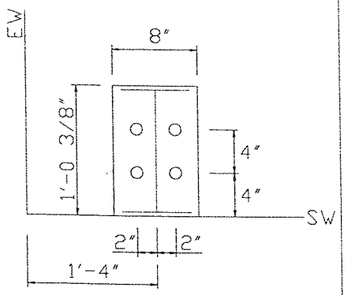

DETAIL A

Dia= 3/4"

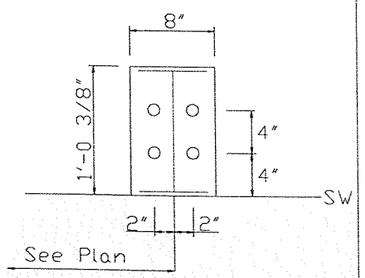

DETAIL B

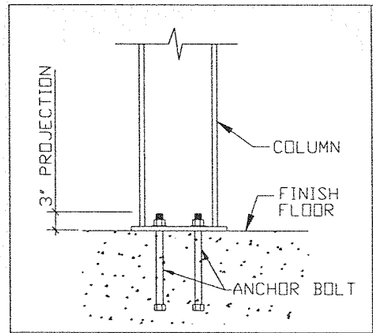

TYPICAL COLUMN BASE PLATE DETAIL

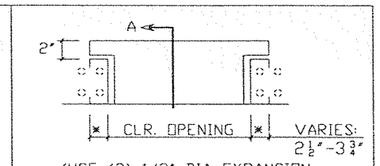

(USE (2) 1/2" DIA EXPANSION BOLTS PER COLUMN)

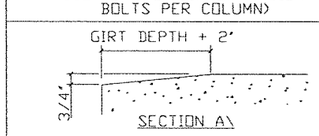

(RECOMMENDED)
TYPICAL OVERHEAD DOOR FRAMED OPENING

THIS DRAWING IS NOT TO SCALE

Flying Horse N Golf Barn		RapidsetBuildings.com	
PROJECT	Flying Horse Barn	PHONE: 800.793.8555	
ID	DBS074842C	ANCHOR BOLT DETAILS	
PROJECT ADDRESS	2138 Flying Horse Club Dr. Colorado Springs, CO 80921	DESIGN: Designer	NBS
		DATE: 11/27/20	SHEET 2 OF 18

FRAME LINES: 6 5 4 3 2 1

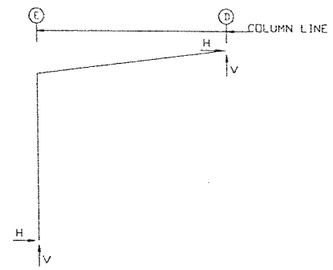

RIGID FRAME: MAXIMUM REACTIONS

Frm Line	Col Line	Column_Reactions(k) Load Id	Hmax H	V Vmax	Load Id	Hmin H	V Vmin
6	E	1	0.5	4.0	6	-0.1	-1.0
6	D	5	0.4	-0.7	2	-0.5	2.4
		1	-0.5	2.8	6	0.4	-0.7

RIGID FRAME: MAXIMUM REACTIONS

Frm Line	Col Line	Column_Reactions(k) Load Id	Hmax H	V Vmax	Load Id	Hmin H	V Vmin
5*	E	1	1.1	8.2	4	-0.2	-1.9
5*	D	4	0.6	-0.7	1	-1.1	5.8
		1	-1.1	5.8	3	0.6	-1.4

5* Frame lines: 5 4 3 2

RIGID FRAME: MAXIMUM REACTIONS

Frm Line	Col Line	Column_Reactions(k) Load Id	Hmax H	V Vmax	Load Id	Hmin H	V Vmin
1	E	1	0.5	4.0	6	-0.1	-1.0
1	D	5	0.4	-0.7	2	-0.5	2.4
		1	-0.5	2.8	6	0.4	-0.7

GENERAL NOTES

1. ALL LOADING CONDITIONS ARE EXAMINED AND ONLY MAXIMUM/MINIMUM H OR V AND THE CORRESPONDING H OR V ARE REPORTED.
2. POSITIVE REACTIONS ARE AS SHOWN IN THE SKETCH. FOUNDATION LOADS ARE IN OPPOSITE DIRECTIONS.
3. BRACING REACTIONS ARE IN THE PLANE OF THE BRACE WITH THE H POINTING AWAY FROM THE BRACED BAY. THE VERTICAL REACTION IS DOWNWARD.

RIGID FRAME: BASIC COLUMN REACTIONS (k)

Frame Line	Column Line	Dead Horiz	Dead Vert	Collateral Horiz	Collateral Vert	Live Horiz	Live Vert	Snow Horiz	Snow Vert	Wind_Left1 Horiz	Wind_Left1 Vert	Wind_Right1 Horiz	Wind_Right1 Vert
6	E	0.0	0.3	0.0	0.0	0.2	1.2	0.5	3.7	-0.2	-1.1	-0.2	-1.7
6	D	0.0	0.1	0.0	0.0	-0.2	0.9	-0.5	2.6	0.5	-1.2	0.5	-0.7

Frame Line	Column Line	Wind_Left2 Horiz	Wind_Left2 Vert	Wind_Right2 Horiz	Wind_Right2 Vert	Wind_Long1 Horiz	Wind_Long1 Vert	Wind_Long2 Horiz	Wind_Long2 Vert	Seismic_Left Horiz	Seismic_Left Vert	Seismic_Right Horiz	Seismic_Right Vert
6	E	-0.2	-1.6	-0.2	-1.2	-0.3	-2.0	0.1	0.8	0.0	0.0	0.0	0.0
6	D	0.5	-0.8	0.5	-1.1	0.7	-1.3	-0.3	0.6	-0.1	0.0	0.1	0.0

Frame Line	Column Line	MIN_SNOW Horiz	MIN_SNOW Vert
6	E	0.2	1.2
6	D	-0.2	0.9

Frame Line	Column Line	Dead Horiz	Dead Vert	Collateral Horiz	Collateral Vert	Live Horiz	Live Vert	Snow Horiz	Snow Vert	Wind_Left1 Horiz	Wind_Left1 Vert	Wind_Right1 Horiz	Wind_Right1 Vert
5*	E	0.0	0.4	0.0	0.1	0.3	2.6	1.0	7.7	-0.4	-2.4	-0.4	-3.6
5*	D	0.0	0.2	0.0	0.0	-0.3	1.8	-1.0	5.5	1.0	-2.6	1.0	-1.5

Frame Line	Column Line	Wind_Left2 Horiz	Wind_Left2 Vert	Wind_Right2 Horiz	Wind_Right2 Vert	Wind_Long1 Horiz	Wind_Long1 Vert	Wind_Long2 Horiz	Wind_Long2 Vert	Seismic_Left Horiz	Seismic_Left Vert	Seismic_Right Horiz	Seismic_Right Vert
5*	E	-0.4	-3.4	-0.4	-2.6	-0.3	-2.6	0.2	1.4	0.0	0.0	0.0	0.0
5*	D	1.0	-1.6	1.0	-2.4	0.9	-1.8	-0.5	1.0	-0.3	0.0	0.3	0.0

Frame Line	Column Line	MIN_SNOW Horiz	MIN_SNOW Vert
5*	E	0.3	2.6
5*	D	-0.3	1.8

Frame Line	Column Line	Dead Horiz	Dead Vert	Collateral Horiz	Collateral Vert	Live Horiz	Live Vert	Snow Horiz	Snow Vert	Wind_Left1 Horiz	Wind_Left1 Vert	Wind_Right1 Horiz	Wind_Right1 Vert
1	E	0.0	0.3	0.0	0.0	0.2	1.2	0.5	3.7	-0.2	-1.1	-0.2	-1.7
1	D	0.0	0.1	0.0	0.0	-0.2	0.9	-0.5	2.6	0.5	-1.2	0.5	-0.7

Frame Line	Column Line	Wind_Left2 Horiz	Wind_Left2 Vert	Wind_Right2 Horiz	Wind_Right2 Vert	Wind_Long1 Horiz	Wind_Long1 Vert	Wind_Long2 Horiz	Wind_Long2 Vert	Seismic_Left Horiz	Seismic_Left Vert	Seismic_Right Horiz	Seismic_Right Vert
1	E	-0.2	-1.6	-0.2	-1.2	-0.3	-2.0	0.1	0.8	0.0	0.0	0.0	0.0
1	D	0.5	-0.8	0.5	-1.1	0.7	-1.3	-0.3	0.6	-0.1	0.0	0.1	0.0

Frame Line	Column Line	MIN_SNOW Horiz	MIN_SNOW Vert
1	E	0.2	1.2
1	D	-0.2	0.9

5* Frame lines: 5 4 3 2

NOTES FOR REACTIONS

1. All loading conditions are examined and only maximum/minimum H or V and the corresponding H or V are reported.
2. Positive reactions are as shown in the sketch. Foundation loads are in opposite directions
3. Bracing reactions are in the plane of the brace with the H pointing away from the braced bay. The vertical reaction is downward
4. Building reactions are based on the following building data:

Width (ft)	=	10.0
Length (ft)	=	100.0
Eave Height (ft)	=	8.8/ 10.0
Roof Slope (rise/12)	=	1.5
Dead Load (psf)	=	2.0
Collateral Load (psf)	=	0.5
Live Load (psf)	=	20.0
Snow Load (psf)	=	60.0
Wind Speed (mph)	=	130.0
Wind Code	=	IBC 15
Exposure	=	C
Closed/Open	=	O
Importance Wind	=	1.00
Importance Seismic	=	1.00
Seismic Zone	=	B
Seismic Coeff (Fa*Ss)	=	0.29

5. Loading conditions are:
   1 Dead+Collateral+Snow
   2 Dead+Collateral+0.75Snow+0.45Wind_Long2R
   3 0.6Dead+0.6Wind_Left1
   4 0.6Dead+0.6Wind_Right1
   5 0.6Dead+0.6Wind_Long1L
   6 0.6Dead+0.6Wind_Long1R

BUILDING BRACING REACTIONS

Wall Loc	Col Line	Col Line	± Reactions(k) Wind Horz	Wind Vert	Seismic Horz	Seismic Vert	Panel_Shear (lb/ft) Wind	Seis	Note
L_EW	6								(h)
F_SW	D								(f)
R_EW	1								(h)
B_SW	E						10	5	

(f)Bracing loads are applied to adjacent building
(h)Rigid frame at endwall

Flying Horse N Golf Barn		RapidsetBuildings.com	
PROJECT	Flying Horse Barn	PHONE: 800.793.8555	
ID	DBS074842C	ANCHOR BOLT REACTIONS	
PROJECT ADDRESS	2138 Flying Horse Club Dr. Colorado Springs, CO 80921	DESIGN: Designer	NBS
		DATE: 11/27/20 SHEET 3	OF 18

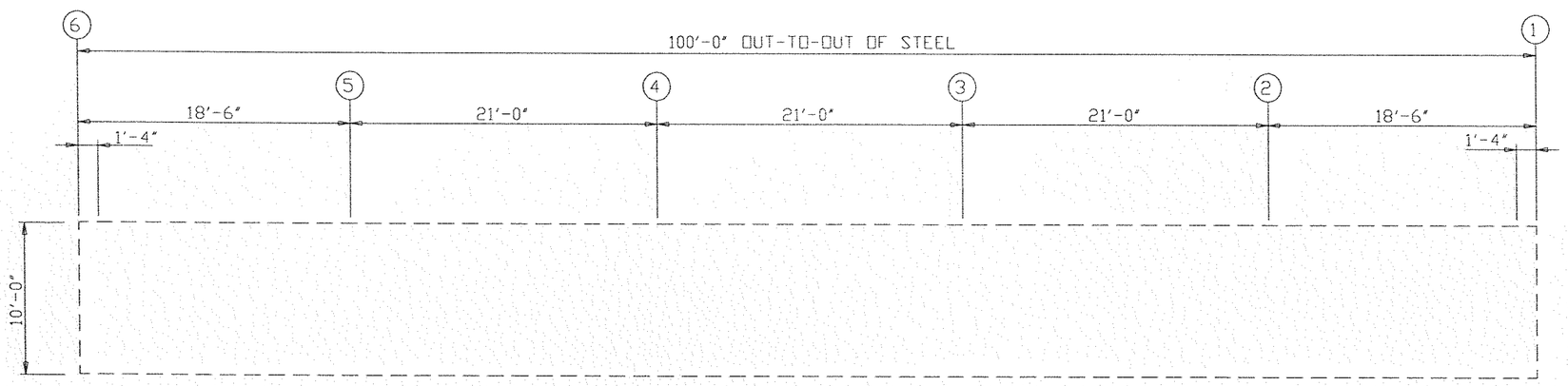

SIDEWALL FRAMING: FRAME LINE D

SIDEWALL FRAMING PLAN

GENERAL NOTES

1. STD. ROD/CABLE SIZES PER PART PREFIX ARE:

ROD		CABLE	
RDB-	= 5/8" ROD	CAA-	= 1/4" CABLE
RDC-	= 3/4" ROD	CAB-	= 3/8" CABLE
RDD-	= 7/8" ROD	CAC-	= 1/2" CABLE
RDE-	= 1" ROD		
RDF-	= 1 1/8" ROD		
RDG-	= 1 1/4" ROD		

2. ROD/CABLE BRACING THAT OCCURS IN FLUSH OR INSET GIRT CONDITIONS WILL REQUIRE FIELD SLOTTING OF GIRT WEBS TO ALLOW FOR BRACING.

3. FRAMED OPENINGS WHICH ARE FIELD LOCATED WILL REQUIRE FIELD CUTTING OF GIRTS AND SHEETING.

4. THIS DRAWING IS NOT TO SCALE.

Flying Horse N Golf Barn		RapidsetBuildings.com		
PROJECT	Flying Horse Barn	PHONE: 800.793.8555		
ID	DBS074842C	SIDEWALL FRAMING		
PROJECT ADDRESS	2138 Flying Horse Club Dr. Colorado Springs, CO 80921	DESIGN: Designer		NBS
		DATE: 11/27/20	SHEET 4	OF 18

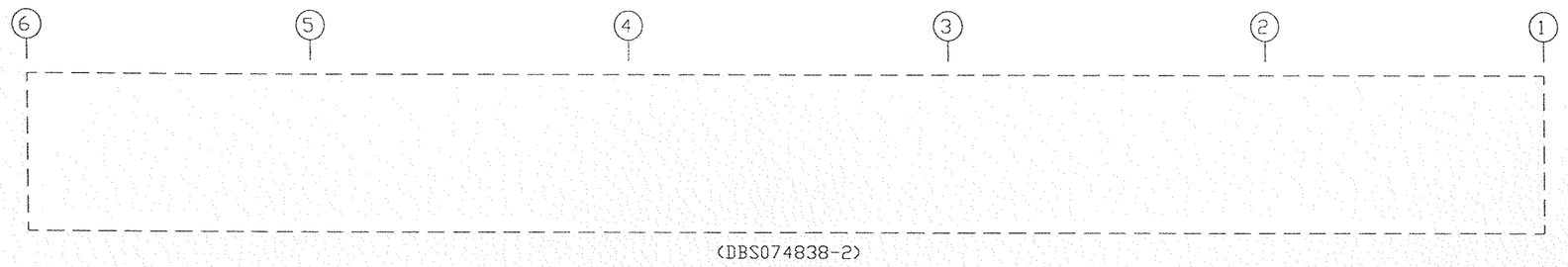

SIDEWALL TRIM: FRAME LINE D

(DBS074838-2) PANELS: 26 Ga. CW - Sagebrush Tan SP

THIS DRAWING IS NOT TO SCALE

Flying Horse N Golf Barn		RapidsetBuildings.com	
PROJECT	Flying Horse Barn	PHONE: 800.793.8555	
ID	DBS074842C	SIDEWALL FRAMING	
PROJECT ADDRESS	2138 Flying Horse Club Dr. Colorado Springs, CO 80921	DESIGN: Designer	NBS
		DATE: 11/27/20 SHEET 5	OF 18

MEMBER TABLE FRAME LINE E		
MARK	PART	LENGTH
E-1	08E2060	18'-5 1/2"
E-2	08E2075	20'-11 1/2"
E-3	08E2060	18'-5 1/2"

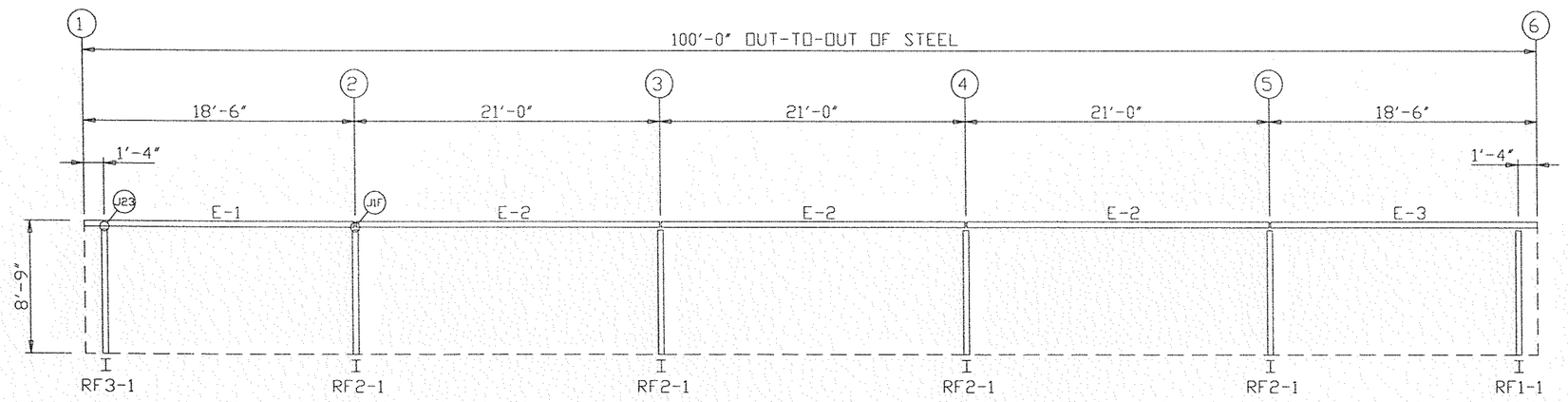

SIDEWALL FRAMING: FRAME LINE E

SIDEWALL FRAMING PLAN

GENERAL NOTES

1. STD. ROD/CABLE SIZES PER PART PREFIX ARE:

ROD		CABLE	
RDB-	= 5/8" ROD	CAA-	= 1/4" CABLE
RDC-	= 3/4" ROD	CAB-	= 3/8" CABLE
RDD-	= 7/8" ROD	CAC-	= 1/2" CABLE
RDE-	= 1" ROD		
RDF-	= 1 1/8" ROD		
RDG-	= 1 1/4" ROD		

2. ROD/CABLE BRACING THAT OCCURS IN FLUSH OR INSET GIRT CONDITIONS WILL REQUIRE FIELD SLOTTING OF GIRT WEBS TO ALLOW FOR BRACING.

3. FRAMED OPENINGS WHICH ARE FIELD LOCATED WILL REQUIRE FIELD CUTTING OF GIRTS AND SHEETING.

4. THIS DRAWING IS NOT TO SCALE.

Flying Horse N Golf Barn		RapidsetBuildings.com	
PROJECT	Flying Horse Barn	PHONE: 800.793.8555	
ID	DBS074842C	SIDEWALL FRAMING	
PROJECT ADDRESS	2138 Flying Horse Club Dr. Colorado Springs, CO 80921	DESIGN: Designer	NBS
		DATE: 11/27/20	SHEET 6 OF 18

TRIM TABLE FRAME LINE E		
◇ID	PART	LENGTH
1	H4000	5"
2	ERA01	8 1/16"
3	RCA01	9 1/4"
4	RCA02	9 1/4"

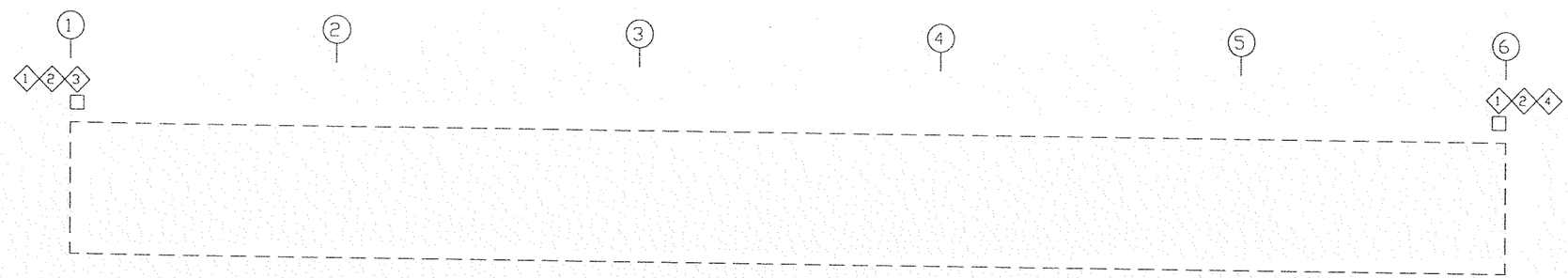

SIDEWALL TRIM: FRAME LINE E

THIS DRAWING IS NOT TO SCALE

Flying Horse N Golf Barn		RapidsetBuildings.com		
PROJECT	Flying Horse Barn	PHONE: 800.793.8555		
ID	DBS074842C	SIDEWALL FRAMING		
PROJECT ADDRESS	2138 Flying Horse Club Dr. Colorado Springs, CO 80921	DESIGN: Designer		NBS
		DATE: 11/27/20	SHEET 7	OF 18

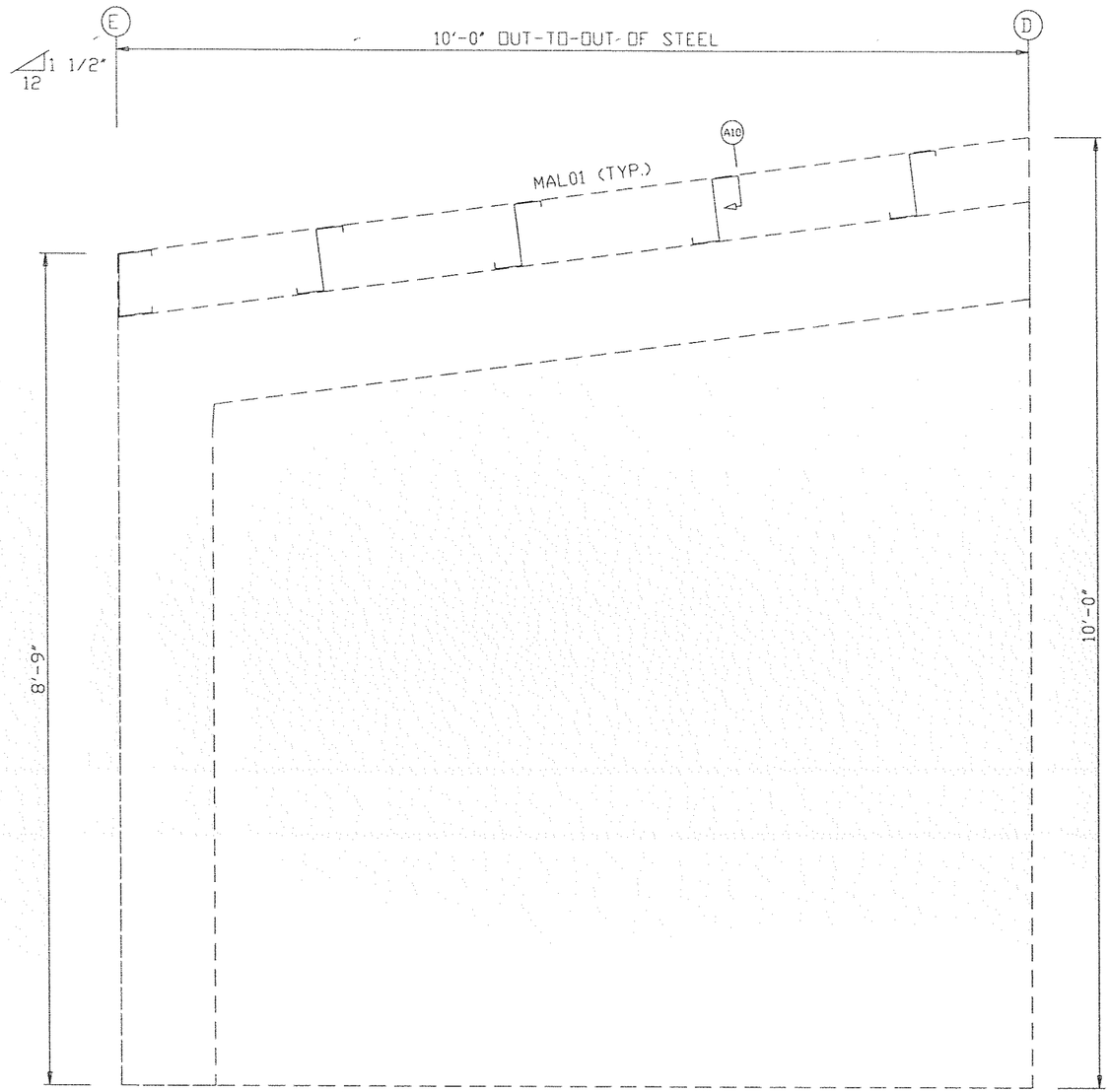

ENDWALL FRAMING: FRAME LINE 6

ENDWALL FRAMING PLAN

GENERAL NOTES

1. STD. ROD/CABLE SIZES PER PART PREFIX ARE:

ROD	CABLE
RDB- = 5/8" ROD	CAA- = 1/4" CABLE
RDC- = 3/4" ROD	CAB- = 3/8" CABLE
RDD- = 7/8" ROD	CAC- = 1/2" CABLE
RDE- = 1" ROD	
RDF- = 1 1/8" ROD	
RDG- = 1 1/4" ROD	

2. ROD/CABLE BRACING THAT OCCURS IN FLUSH OR INSET GIRT CONDITIONS WILL REQUIRE FIELD SLOTTING OF GIRT WEBS TO ALLOW FOR BRACING.
3. FRAMED OPENINGS WHICH ARE FIELD LOCATED WILL REQUIRE FIELD CUTTING OF GIRTS AND SHEETING.
4. THIS DRAWING IS NOT TO SCALE.

Flying Horse N Golf Barn		RapidsetBuildings.com	
PROJECT	Flying Horse Barn	PHONE: 800.793.8555	
ID	DBS074842C	ENDWALL FRAMING	
PROJECT ADDRESS	2138 Flying Horse Club Dr. Colorado Springs, CO 80921	DESIGN: Designer	NBS
		DATE: 11/27/20	SHEET 8 OF 18

TRIM TABLE FRAME LINE 6			
◇ID	PART	LENGTH	DETAIL
1	RTA02	20'-2"	TRIM_701
2	LEE10	10'-1"	

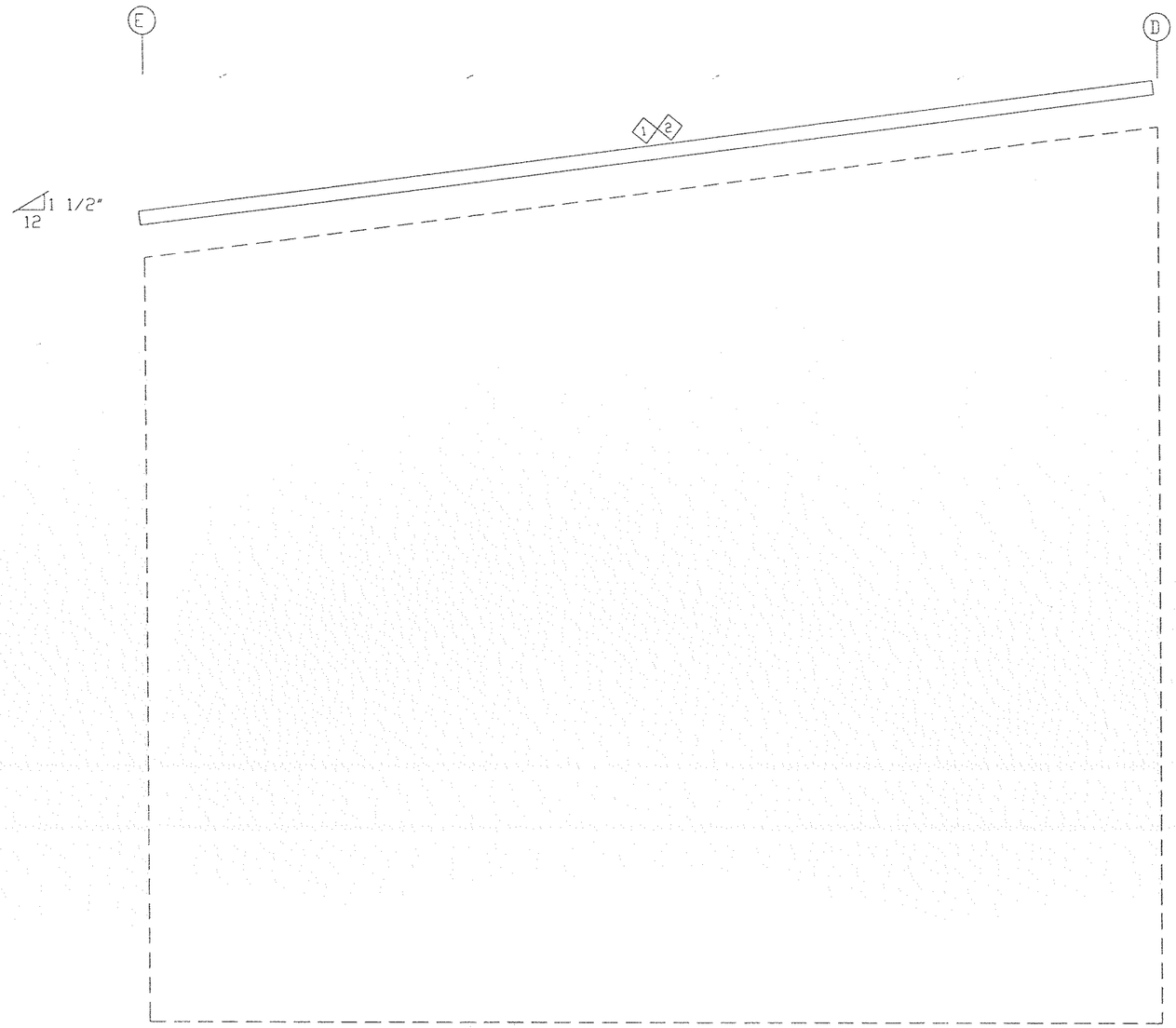

ENDWALL TRIM: FRAME LINE 6

THIS DRAWING IS NOT TO SCALE

Flying Horse N Golf Barn		RapidsetBuildings.com	
PROJECT	Flying Horse Barn	PHONE: 800.793.8555	
ID	DBS074842C	ENDWALL FRAMING	
PROJECT ADDRESS	2138 Flying Horse Club Dr. Colorado Springs, CO 80921	DESIGN: Designer	NBS
		DATE: 11/27/20	SHEET 9 OF 18

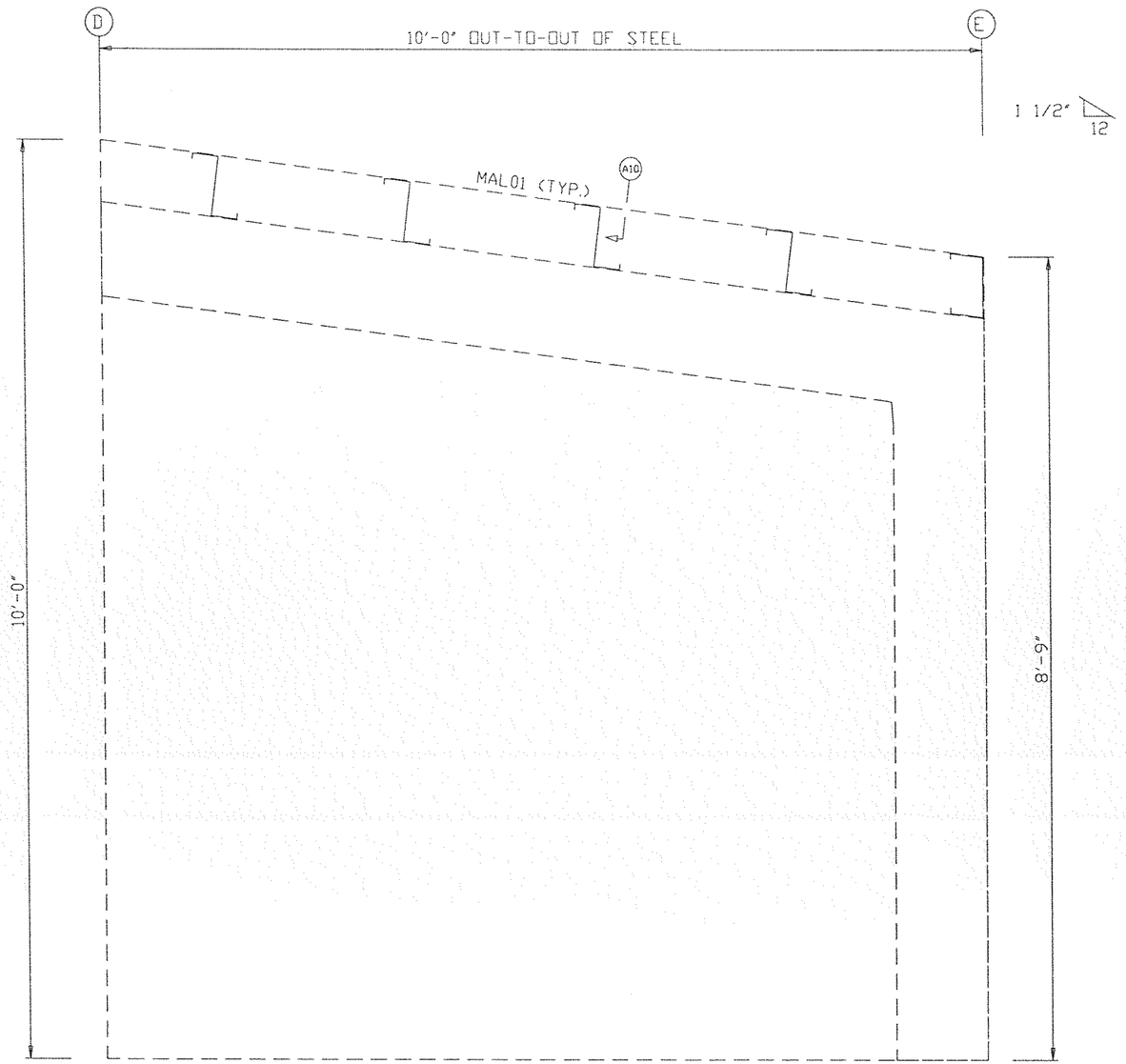

ENDWALL FRAMING: FRAME LINE 1

ENDWALL FRAMING PLAN

GENERAL NOTES

1. STD. ROD/CABLE SIZES PER PART PREFIX ARE:

ROD	CABLE
RDB- = 5/8" ROD	CAA- = 1/4" CABLE
RDC- = 3/4" ROD	CAB- = 3/8" CABLE
RDD- = 7/8" ROD	CAC- = 1/2" CABLE
RDE- = 1" ROD	
RDF- = 1 1/8" ROD	
RDG- = 1 1/4" ROD	

2. ROD/CABLE BRACING THAT OCCURS IN FLUSH OR INSET GIRT CONDITIONS WILL REQUIRE FIELD SLOTTING OF GIRT WEBS TO ALLOW FOR BRACING.
3. FRAMED OPENINGS WHICH ARE FIELD LOCATED WILL REQUIRE FIELD CUTTING OF GIRTS AND SHEETING.
4. THIS DRAWING IS NOT TO SCALE.

Flying Horse N Golf Barn		RapidsetBuildings.com	
PROJECT	Flying Horse Barn	PHONE: 800.793.8555	
ID	DBS074842C	ENDWALL FRAMING	
PROJECT ADDRESS	2138 Flying Horse Club Dr. Colorado Springs, CO 80921	DESIGN: Designer	NBS
		DATE: 11/27/20	SHEET 10 OF 18

TRIM TABLE FRAME LINE 1			
◇ID	PART	LENGTH	DETAIL
1	RTA02	20'-2"	TRIM_701
2	LEE10	10'-1"	

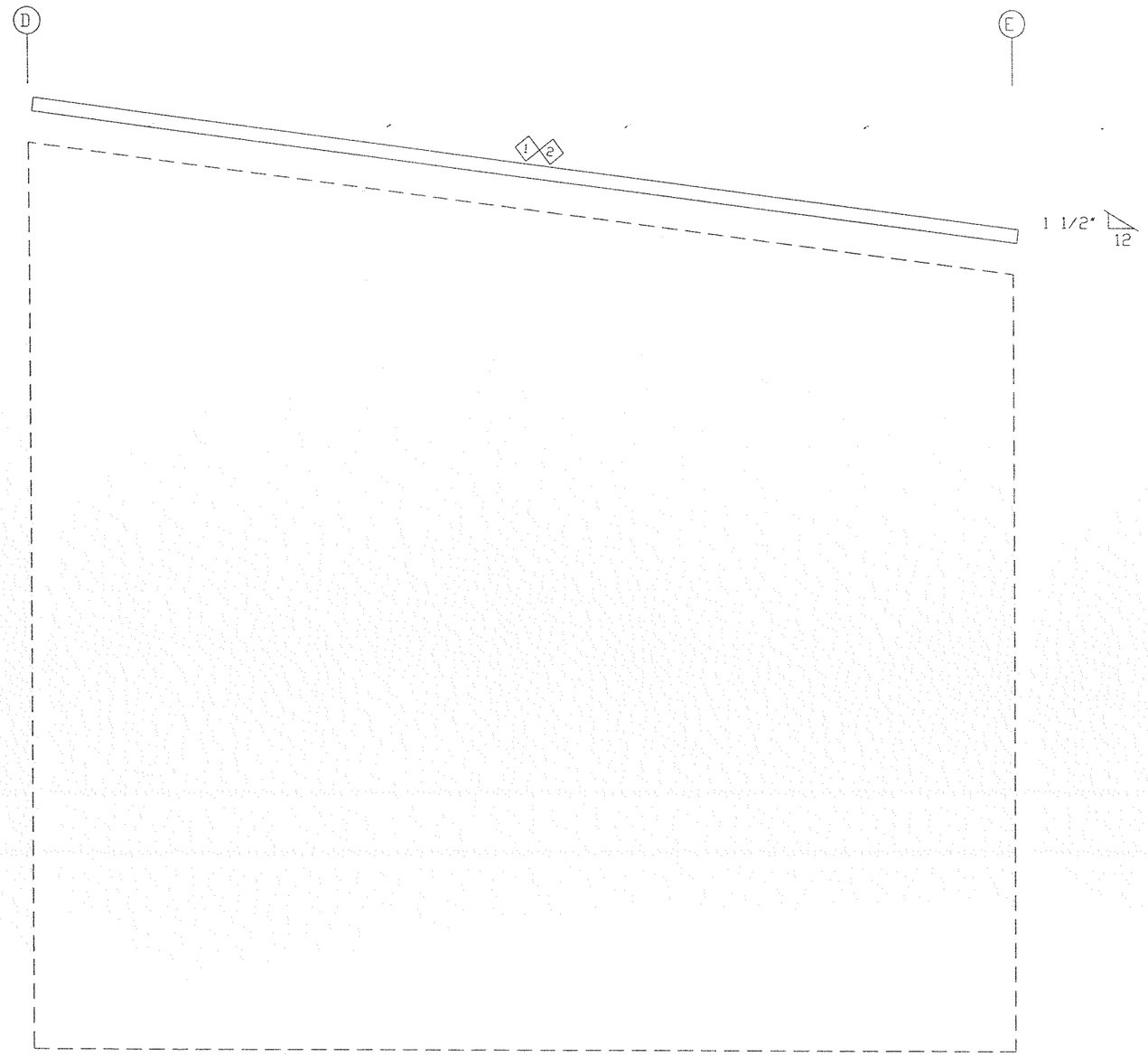

ENDWALL TRIM: FRAME LINE 1

THIS DRAWING IS NOT TO SCALE

Flying Horse N Golf Barn		RapidsetBuildings.com	
PROJECT	Flying Horse Barn	PHONE: 800.793.8555	
ID	DBS074842C	ENDWALL FRAMING	
PROJECT ADDRESS	2138 Flying Horse Club Dr. Colorado Springs, CO 80921	DESIGN: Designer	NBS
		DATE: 11/27/20	SHEET 11 OF 18

MEMBER TABLE ROOF PLAN		
MARK	PART	LENGTH
P-1	08Z060	19'-9 1/2"
P-2	08Z060	23'-7 1/2"
P-3	08Z060	19'-9 1/2"
E-1	08E2060	18'-5 1/2"
E-2	08E2075	20'-11 1/2"
E-3	08E2060	18'-5 1/2"
CB-1	RDB-	23'-0"

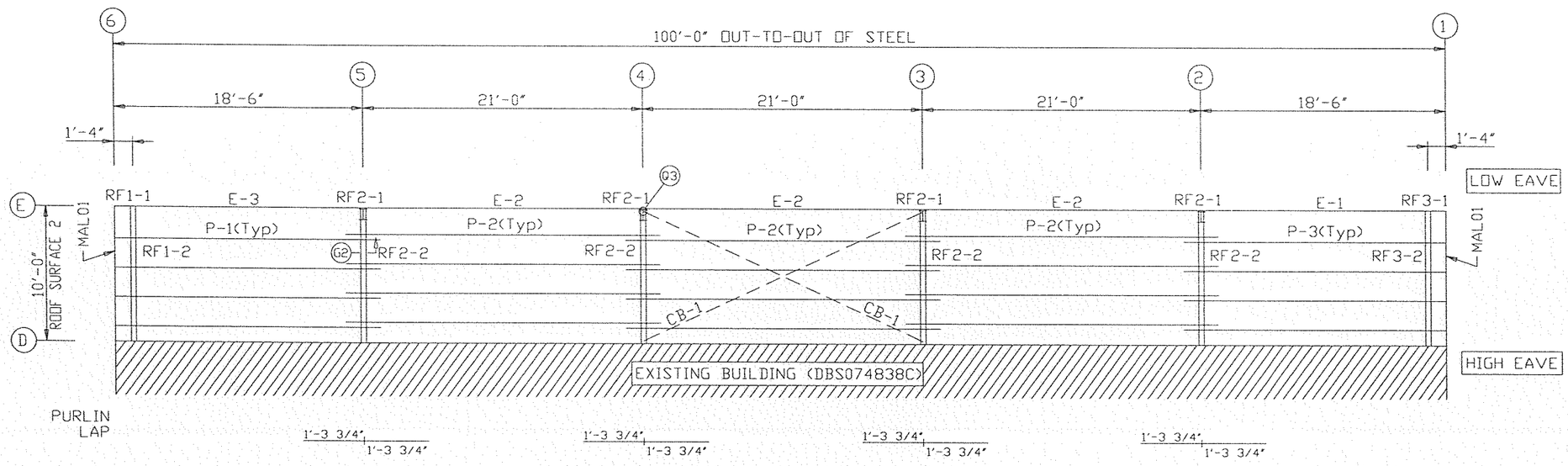

ROOF FRAMING PLAN

ROOF FRAMING PLAN

GENERAL NOTES

1. PLACE TAGGED END OF RAFTERS TOWARDS THE LOW EAVE.
2. STD. ROD/CABLE SIZES PER PART PREFIX ARE:

ROD		CABLE	
RDB-	= 5/8" ROD	CAA-	= 1/4" CABLE
RDC-	= 3/4" ROD	CAB-	= 3/8" CABLE
RDD-	= 7/8" ROD	CAC-	= 1/2" CABLE
RDE-	= 1" ROD		
RDF-	= 1 1/8" ROD		
RDG-	= 1 1/4" ROD		

3. PURLIN AND EAVE STRUT CONNECTIONS UTILIZE BOTH A307 AND A325 BOLTS. REFER TO THE DETAILS FOR SPECIFIC USAGE REQUIREMENTS.
4. THIS DRAWING IS NOT TO SCALE.

THIS DRAWING IS NOT TO SCALE

Flying Horse N Golf Barn		RapidsetBuildings.com		
PROJECT	Flying Horse Barn	PHONE: 800.793.8555		
ID	DBS074842C	ROOF FRAMING		
PROJECT ADDRESS	2138 Flying Horse Club Dr. Colorado Springs, CO 80921	DESIGN: Designer		NBS
		DATE: 11/27/20	SHEET	12 OF 18

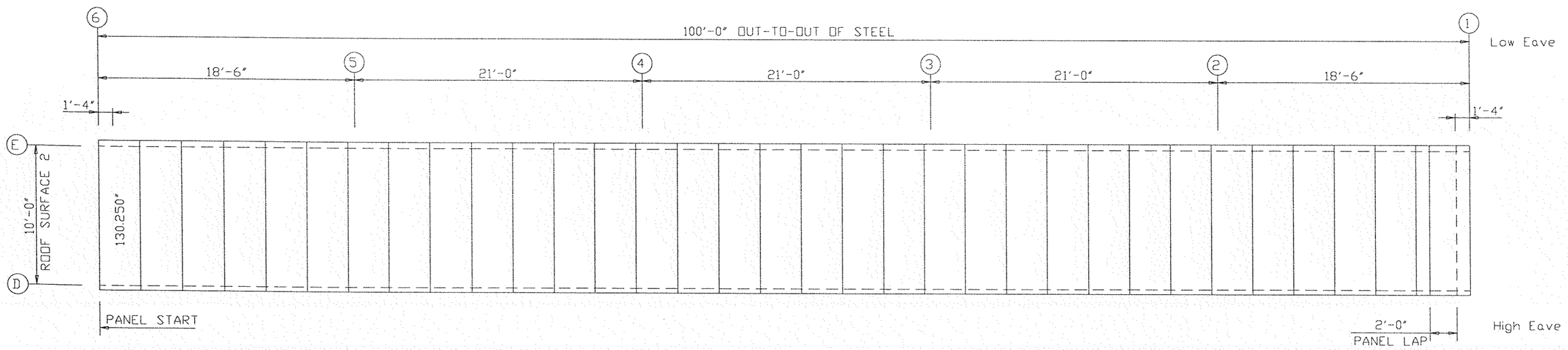

ROOF SHEETING PLAN

PANELS: 26 Ga. CR - Burnished Slate SP

THIS DRAWING IS NOT TO SCALE

Flying Horse N Golf Barn		RapidsetBuildings.com	
PROJECT	Flying Horse Barn	PHONE: 800.793.8555	
ID	DBS074842C	ROOF SHEETING PLAN	
PROJECT ADDRESS	2138 Flying Horse Club Dr. Colorado Springs, CO 80921	DESIGN: Designer	NBS
		DATE: 11/27/20	SHEET 13 OF 18

SPLICE BOLT TABLE						
Mark	Qty Top	Bot	Int	Type	Dia	Length
SP-1	4	4	0	A325	0.625	2.25
SP-2	4	0	0	A325	0.625	2.25

MEMBER TABLE					
Mark	Web Depth Start/End	Web Plate Thick	Web Plate Length	Outside Flange W x Thk x Length	Inside Flange W x Thk x Length
RF1-1	12.0/12.0	0.150	97.9	5 x 3/16" x 96.4 5 x 3/16" x 12.3	5 x 3/16" x 82.8
RF1-2	12.0/12.0	0.150	109.0	5 x 3/16" x 107.5	5 x 3/16" x 107.5

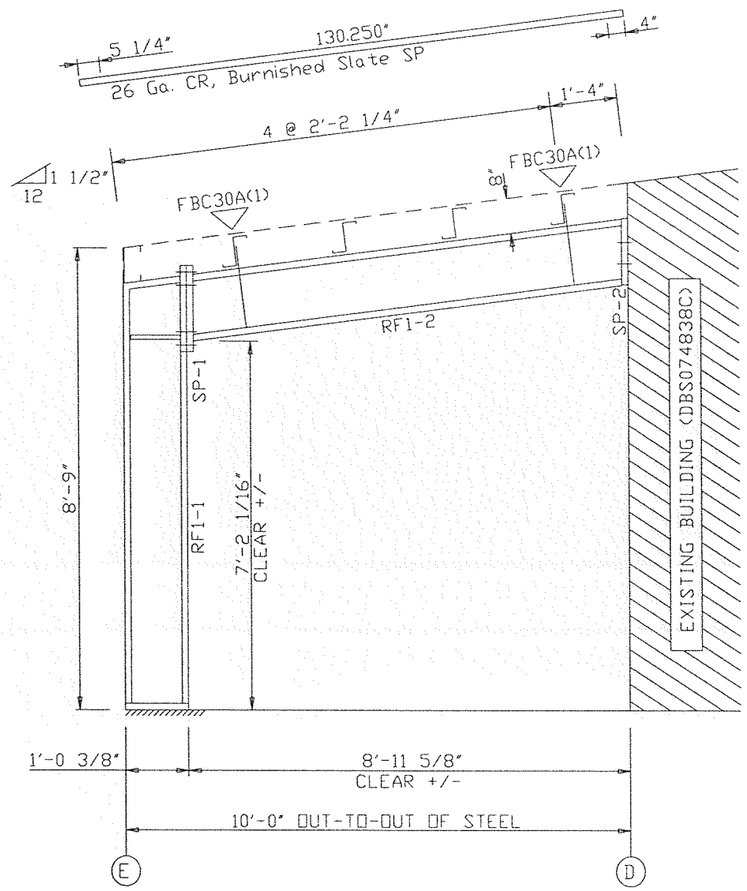

RIGID FRAME ELEVATION: FRAME LINE 6

THIS DRAWING IS NOT TO SCALE

Flying Horse N Golf Barn		RapidsetBuildings.com	
PROJECT	Flying Horse Barn	PHONE: 800.793.8555	
ID	DBS074842C	RIGID FRAME ELEVATION	
PROJECT ADDRESS	2138 Flying Horse Club Dr. Colorado Springs, CO 80921	DESIGN: Designer	NBS
		DATE: 11/27/20	SHEET 14 OF 18

SPLICE BOLT TABLE						
Mark	Qty Top	Bot	Int	Type	Dia	Length
SP-1	4	4	0	A325	0.625	2.25
SP-2	4	0	0	A325	0.625	2.25

MEMBER TABLE					
Mark	Web Depth Start/End	Web Plate Thick	Web Plate Length	Outside Flange W x Thk x Length	Inside Flange W x Thk x Length
RF2-1	12.0/12.0	0.150	97.9	5 x 3/16" x 96.4 5 x 3/16" x 12.3	5 x 3/16" x 82.8
RF2-2	12.0/12.0	0.150	109.0	5 x 3/16" x 107.5	5 x 3/16" x 107.5

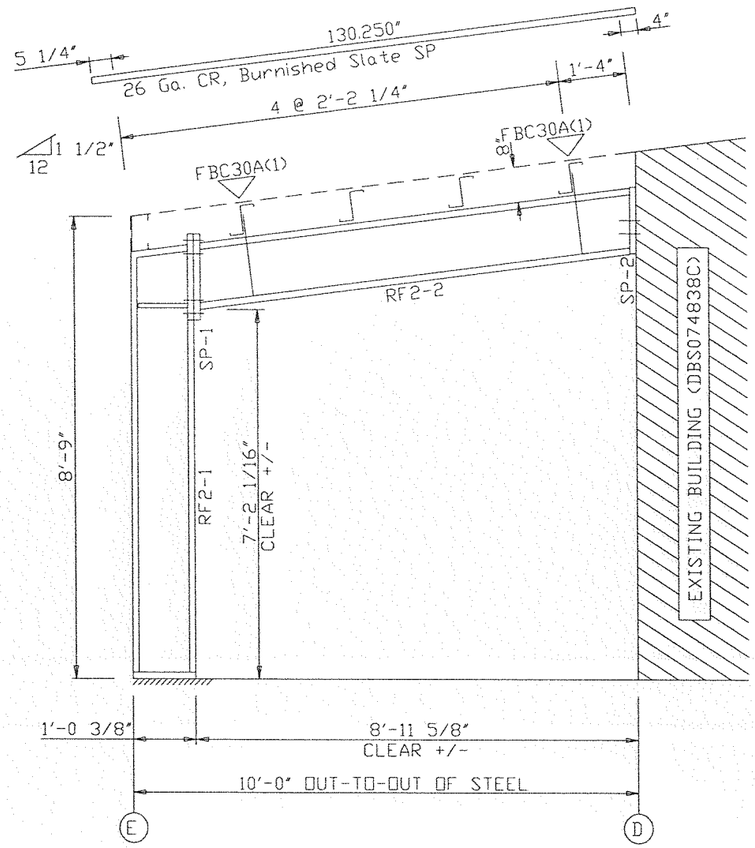

RIGID FRAME ELEVATION: FRAME LINE 5 4 3 2

THIS DRAWING IS NOT TO SCALE

Flying Horse N Golf Barn		RapidsetBuildings.com	
PROJECT	Flying Horse Barn	PHONE: 800.793.8555	
ID	DBS074842C	RIGID FRAME ELEVATION	
PROJECT ADDRESS	2138 Flying Horse Club Dr. Colorado Springs, CO 80921	DESIGN: Designer	NBS
		DATE: 11/27/20	SHEET 15 OF 18

SPLICE BOLT TABLE						
Mark	Qty Top	Bot	Int	Type	Dia	Length
SP-1	4	4	0	A325	0.625	2.25
SP-2	4	0	0	A325	0.625	2.25

MEMBER TABLE					
Mark	Web Depth Start/End	Web Plate Thick	Web Plate Length	Outside Flange W x Thk x Length	Inside Flange W x Thk x Length
RF3-1	12.0/12.0	0.150	97.9	5 x 3/16" x 96.4 5 x 3/16" x 12.3	5 x 3/16" x 82.8
RF3-2	12.0/12.0	0.150	109.0	5 x 3/16" x 107.5	5 x 3/16" x 107.5

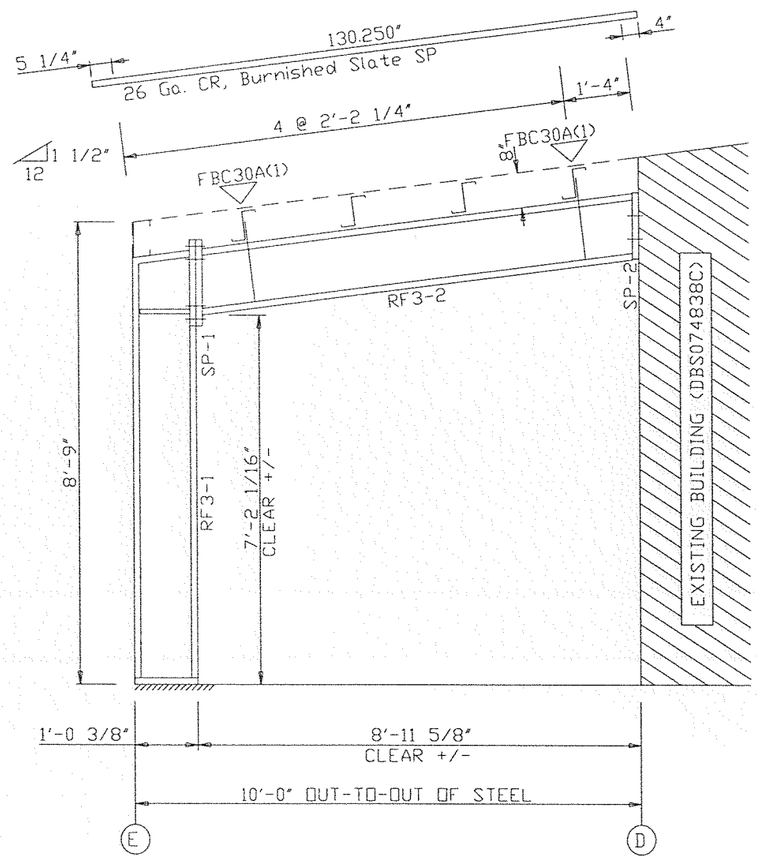

RIGID FRAME ELEVATION: FRAME LINE 1

THIS DRAWING IS NOT TO SCALE

Flying Horse N Golf Barn		RapidsetBuildings.com	
PROJECT	Flying Horse Barn	PHONE: 800.793.8555	
ID	DBS074842C	RIGID FRAME ELEVATION	
PROJECT ADDRESS	2138 Flying Horse Club Dr. Colorado Springs, CO 80921	DESIGN: Designer	NBS
		DATE: 11/27/20	SHEET 16 OF 18

TYPICAL WASHER REQUIREMENTS ERECTOR NOTE
(UNLESS NOTED OTHERWISE ON DRAWINGS)

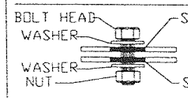

SLOT TO SLOT CONNECTIONS

WASHERS ARE REQUIRED ON BOTH SIDES OF MATERIAL IF SLOTS ARE USED ON BOTH SIDES (NOTE LAPPED ZEE MEMBER EXCEPTION).

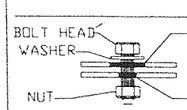

SLOT TO HOLE CONNECTIONS

ONE WASHER REQUIRED ON SLOTTED SIDE ONLY.

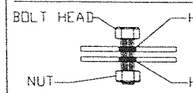

HOLE TO HOLE CONNECTIONS

NO WASHERS ARE REQUIRED WHEN SLOTS ARE NOT USED.

WASHER PART NUMBERS\

H0200 - 1/2" FLAT WASHER	H0240 - 1" FLAT WASHER
H0210 - 5/8" FLAT WASHER	H0250 - 1 1/8" FLAT WASHER
H0220 - 3/4" FLAT WASHER	H0260 - 1 1/4" FLAT WASHER
H0230 - 7/8" FLAT WASHER	

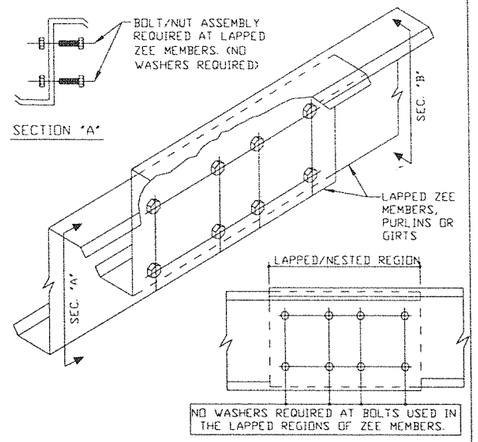

COLLATERAL DEAD LOADS, UNLESS OTHERWISE NOTED, ARE ASSUMED TO BE UNIFORMLY DISTRIBUTED. WHEN SUSPENDED SPRINKLER SYSTEMS, LIGHTING, HVAC EQUIPMENT, CEILINGS, ETC. ARE SUSPENDED FROM ROOF MEMBERS, CONSULT ENGINEER OF RECORD IF THESE CONCENTRATED LOADS EXCEED 500 POUNDS (USING THE WEB MOUNT DETAIL) OR 200 POUNDS (USING THE FLANGE MOUNT DETAIL), OR IF INDIVIDUAL MEMBERS ARE LOADED SIGNIFICANTLY MORE THAN OTHERS.

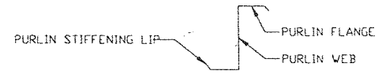

GENERAL RESTRICTION:

UNDER NO CIRCUMSTANCES CAN THE PURLIN STIFFENING LIP BE FIELD MODIFIED FROM THE FACTORY SUPPLIED CONDITION. ALSO DO NOT HANG ANYTHING FROM PURLIN STIFFENING LIP.

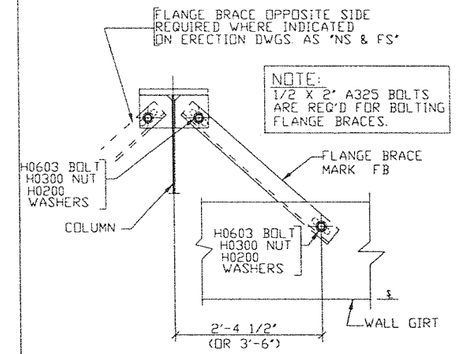

TYP FLANGE BRACE @ BU COL & GIRT

NOTE: SEE PLANS AND ELEVATIONS FOR FLANGE BRACE PART MARKS

AG0030

OPTIONS FOR SUPPORT ATTACHMENTS

OPTION A (200 LBS MAX)

DRILL SUPPORT THROUGH THE BOTTOM FLANGE OF THE PURLIN.

OPTION B (500 LBS MAX)

SUPPORT ANGLE OR SOME OTHER TYPE OF BRACKET. (NOT BY NBS) SUPPORT THROUGH PURLIN WEB.

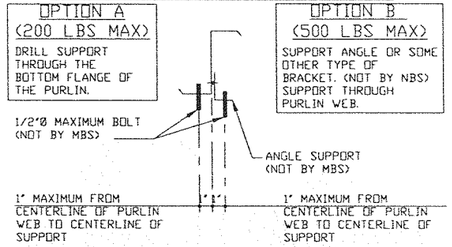

OPTION C: (200 LBS MAX)

IF PURLIN FLANGE SUPPORT CLAMPS ARE USED.

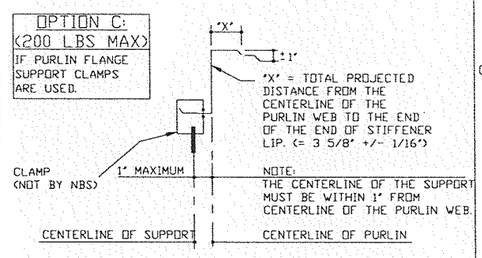

PURLIN SUPPORT METHODS

B00010

ERECTOR NOTE: UNLESS SPECIFICALLY NOTED OTHERWISE, STANDARD ZEE GIRT ORIENTATION IS TO HAVE THE GIRT TOED DOWN AT THE STEEL LINE AS SHOWN IN THE DETAIL BELOW.

UNLESS SPECIFICALLY NOTED OTHERWISE, STANDARD CEE GIRT ORIENTATION IS TO HAVE THE GIRT TOED UP AS SHOWN IN THE DETAIL BELOW. STANDARD CLIP ATTACHMENT IS BELOW THE GIRT, HOWEVER SOME DETAILS REQUIRE THAT THE CLIP BE ABOVE THE GIRT. (REFER TO THE GIRT DETAILS ON THE ERECTION DRAWINGS FOR REQUIREMENTS) BOTH CLIP ATTACHMENTS ARE SHOWN IN THE DETAIL BELOW.

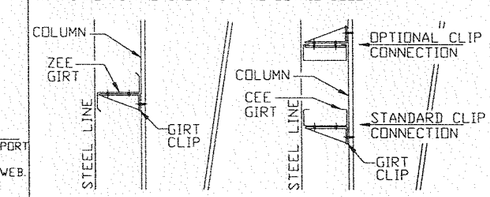

ZEE GIRT ORIENTATION CEE GIRT ORIENTATION

STANDARD GIRT ORIENTATION DETAIL

NOTE: BYPASS GIRT CONDITION IS SHOWN FOR REFERENCE ONLY. YOUR PROJECT MAY HAVE FLUSH OR INSET GIRTS.

CC0005

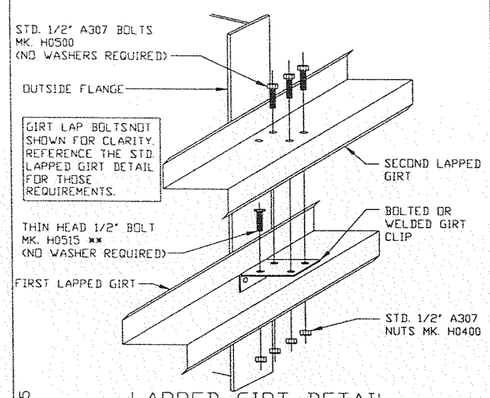

LAPPED GIRT DETAIL

LAPPED GIRTS @ INTERIOR BAY COLUMNS

** THE THIN HEAD 1/2" A307 BOLT MUST BE INSTALLED INTO THE FIRST GIRT AND CLIP OF A LAPPED CONDITION. THE BOLT/NUT ASSEMBLY MUST BE WRENCH TIGHT PRIOR TO THE SECOND LAPPED GIRT BEING INSTALLED.

CC0015

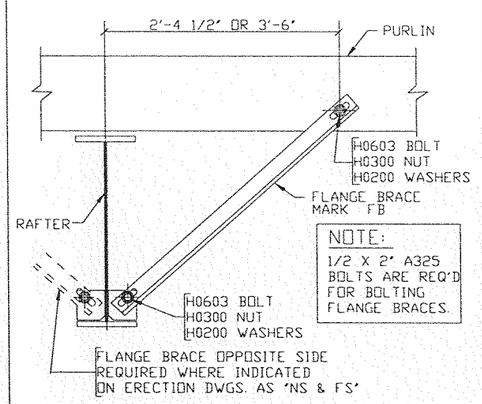

TYP FLANGE BRACE @ PURLIN & RAFTER

NOTE: SEE PLANS AND ELEVATIONS FOR FLANGE BRACE PART MARKS

AG0010

"CLASSIC PANEL" ERECTION NOTES

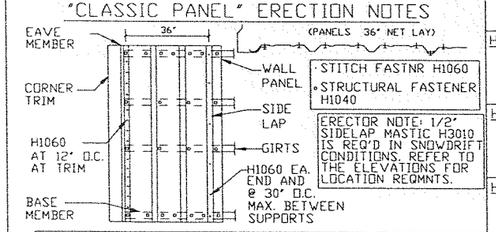

- STITCH FASTNR H1060
- STRUCTURAL FASTENER H1040

ERECTOR NOTE: 1/2" SIDELAP MASTIC H3010 IS REQ'D IN SNOWDRIFT CONDITIONS. REFER TO THE ELEVATIONS FOR LOCATION REQMNTS.

1. BLOCK GIRTS TO "LEVEL" POSITION BEFORE STARTING PANEL ERECTION. MAINTAIN WOOD BLOCKING (NOT BY MBS) UNTIL PANEL TO STRUCTURAL FASTENERS ARE INSTALLED.
2. ALIGN AND PLUMB FIRST WALL PANEL.
3. TO PREVENT "OIL-CANNING", ALL PANEL FASTENERS SHOULD START FROM BASE MEMBER AND THEN BE SECURED TO EACH STRUCTURAL GIRT TOWARD THE EAVE.
4. FOUNDATION MUST BE SQUARE, LEVEL, AND CORRECT TO THE OUT-TO-OUT STEEL LINE DIMENSIONS.
5. ERECTION CREW IS TO CLEAN ALL WALL PANELS BEFORE LEAVING JOB SITE.
6. ERECTOR IS TO ERECT PANELS SO THAT SIDELAPS ARE AWAY FROM THE MAIN TRAFFIC AREA'S LINE OF SIGHT.
7. STORE PANELS PROPERLY TO PREVENT MOISTURE. SEE ERECTION MANUAL.

GA0051

STANDARD FASTENER SCHEDULE

H1000 SELF-TAPPING SCREW (GOOF SCREW) 17-14 x 1 1/4" WITH WASHER LONG LIFE FASTENER 3/8" HEAD	H1042 SELF-DRILLING SCREW 12-14 x 7/8" TCP3 W/O WASHER 5/16" HEAD	H1070 SELF-DRILLING SCREW 12-24 x 1 1/2" TCP5 W/O WASHER 5/16" HEAD 1/2" THK MAX DRILLING CAPACITY
H1020 SELF-DRILLING SCREW 1/4-14 x 1 1/4" TCP3 W/O WASHER 5/16" HEAD 3/16" THK MAX DRILLING CAPACITY	H1045 SELF-DRILLING SCREW 12-14 x 2" TCP3 W/O WASHER 5/16" HEAD	H1100 1/8" x 3/16" STAINLESS STEEL BLIND POP RIVET
H1030 SELF-DRILLING SCREW 12-14 x 1 1/4" TCP2 WITH WASHER LONG LIFE FASTENER 5/16" HEAD	H1047 SELF-DRILLING SCREW 12-14 x 2" TCP3 FLAT TOP WITH WASHER 5/16" HEAD	H1110 3/8" STAINLESS GROMMET FASTENER
H1035 SELF-DRILLING SCREW 12-14 x 1 1/2" TCP2 WITH WASHER LONG LIFE FASTENER 5/16" HEAD	H1050 SELF-DRILLING SCREW 1/4-14 x 7/8" TCP1 WITH WASHER LONG LIFE FASTENER 5/16" HEAD	H1220 SELF-DRILLING SCREW 12-14 x 1" TCP3 W/O WASHER PHILLIPS HEAD
H1040 SELF-DRILLING SCREW 12-14 x 1 1/4" TCP2 W/O WASHER 5/16" HEAD	H1060 SELF-DRILLING SCREW 1/4-14 x 7/8" TCP1 W/O WASHER 5/16" HEAD	PRE-DRILL DIAMETERS 3/16" FOR: H1020, H1070 5/32" FOR: H1030, H1035, H1040, H1041, H1042, H1045, H1047, H1220
H1041 SELF-DRILLING SCREW 12-14 x 1 1/4" TCP2 FLAT TOP WITH WASHER 5/16" HEAD	H1061 SELF-DRILLING SCREW 1/4-14 x 7/8" TCP1 FLAT TOP WITH WASHER 5/16" HEAD	1/8" FOR: H1050, H1060, H1061

DA0080

Flying Horse N Golf Barn		RapidsetBuildings.com	
PROJECT	Flying Horse Barn	PHONE: 800.793.8555	
ID	DBS074842C	DETAIL DRAWINGS	
PROJECT ADDRESS	2138 Flying Horse Club Dr. Colorado Springs, CO 80921	DESIGN Designer	NBS
		DATE: 11/27/20	SHEET 17 OF 18

ERECTOR NOTE:
WHEN SLOT REINFORCEMENT PLATES ARE PRESENT IN 12" COLD-FORMED MEMBERS, ROD/CABLE BRACE MUST UTILIZE REINFORCED SLOT LOCATION.

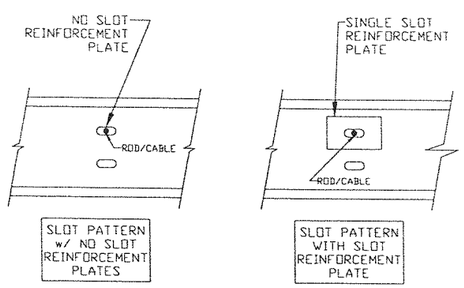

12" COLD-FORMED MEMBER

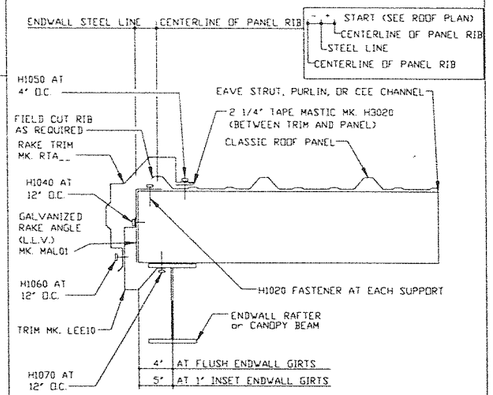

SCULPTURED RAKE WITH OPEN WALL

FLUSH OR INSET ENDWALL GIRTS

SEE CLASSIC ROOF ERECTION NOTES FOR FASTENER LOCATIONS

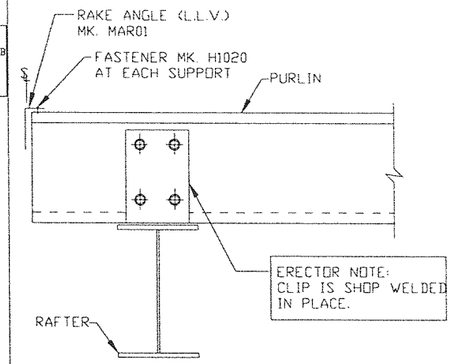

WELDED CLIP @ R/F ENDWALL

USE (4) 1/2" x 1 1/4" A307
BOLTS H0500 / NUTS H0400
REFERENCE ERECTOR NOTE FOR TYPICAL WASHER REQUIREMENTS

A10

BB0050

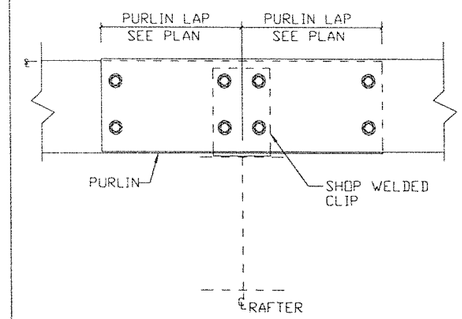

PURLIN TO INTERIOR FRAME RAFTER

USE (8) 1/2" x 1 1/4" A307
BOLTS H0500 / NUTS H0400
REFERENCE ERECTOR NOTE FOR TYPICAL WASHER REQUIREMENTS

G2

BB0050

ROD DIAMETER	MARK NUMBER	HILLSIDE WASHERS	FLAT WASHERS	A307/A325 NUTS	COUPLING NUTS
5/8" Ø	RDB ___	(2) H0930	(2) H0210	(2) H0310	H0810
3/4" Ø	RDC ___	(2) H0930	(2) H0220	(2) H0320	H0820
7/8" Ø	RDD ___	(2) H0930	(2) H0230	(2) H0325	H0830
1" Ø	RDE ___	(2) H0960	(2) H0240	(2) H0330	H0840
1 1/8" Ø	RDF ___	(2) H0960	(2) H0250	(2) H0450	H0850
1 1/4" Ø	RDG ___	(2) H0960	(2) H0260	(2) H0340	H0860

SEE PLANS AND ELEVATIONS FOR BRACING MARK NUMBERS

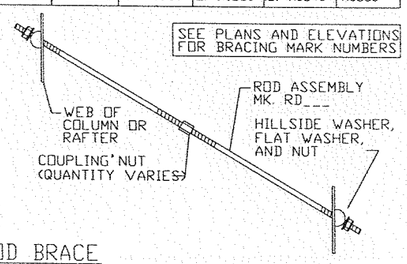

ROD BRACE

WEB TO WEB

Q3

AF0010

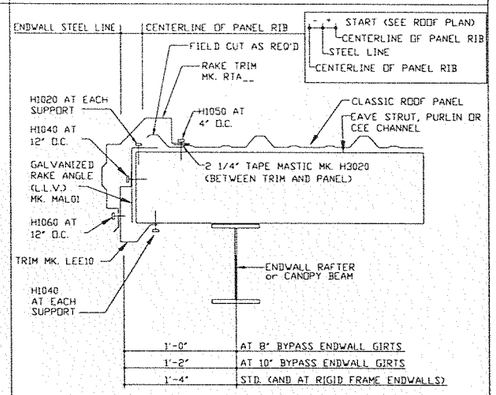

SCULPTURED RAKE WITH OPEN WALL

BYPASS ENDWALL GIRTS

SEE CLASSIC ROOF ERECTION NOTES FOR FASTENER LOCATIONS

TRIM_701

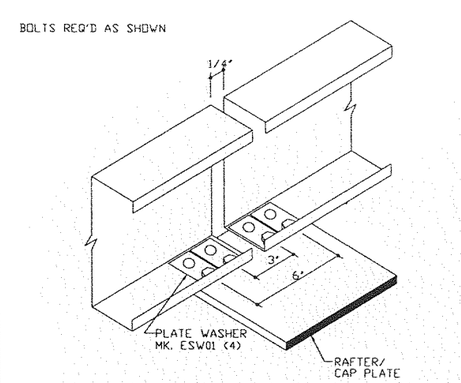

LOW EAVE EAVE STRUT AT FLUSH GIRTS

USE (4) 1/2" x 2" A325 BOLTS H0603 / NUTS H0300
REFERENCE ERECTOR NOTE FOR TYPICAL WASHER REQUIREMENTS

J1f

BA0010

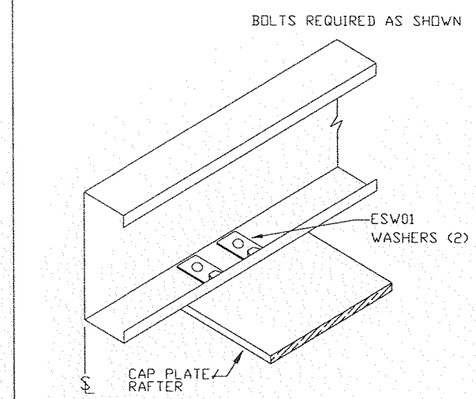

LOW EAVE EAVE STRUT

USE (4) 1/2" x 1 1/4" A325 BOLTS H0603 / NUTS H0300
REFERENCE ERECTOR NOTE FOR TYPICAL WASHER REQUIREMENTS

J23

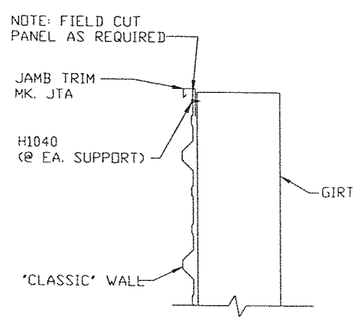

WALL PANEL TERMINATION

SEE WALL SHEETING ERECTION NOTES FOR FASTENER LOCATIONS

TRIM_711

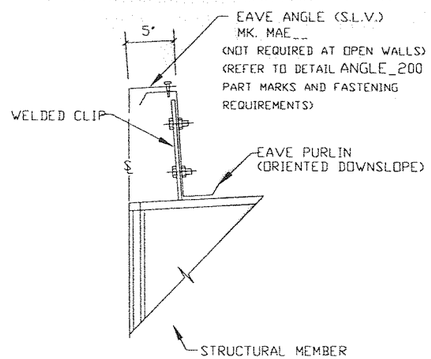

EAVE PURLIN TO RIGID FRAME

USE (4) 1/2" x 1 1/4" A307 BOLTS H0500 / NUTS H0400
REFERENCE ERECTOR NOTE FOR TYPICAL WASHER REQUIREMENTS

J23

BD0040

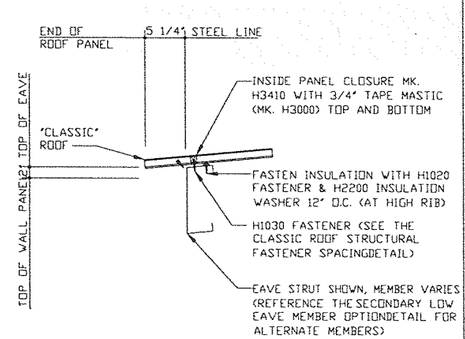

SIMPLE EAVE AT "CLASSIC" ROOF

SEE WALL SHEETING ERECTION NOTES FOR FASTENER LOCATIONS

TRIM_5

DB0010

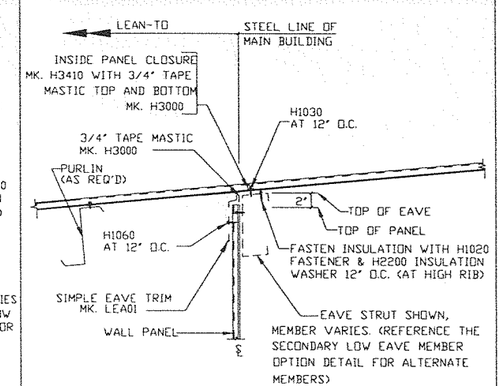

AT-EAVE LEAN-TO with PANEL BELOW

SEE WALL SHEETING ERECTION NOTES FOR FASTENER SPACING

TRIM_734

Flying Horse N Golf Barn		RapidsetBuildings.com	
PROJECT	Flying Horse Barn	PHONE: 800.793.8555	
ID	DBS074842C	DETAIL DRAWINGS	
PROJECT ADDRESS	2138 Flying Horse Club Dr. Colorado Springs, CO 80921	DESIGN: Designer	NBS
		DATE: 11/27/20	SHEET 18 OF 18