STERLING RANCH EAST FILING NO. 2

COUNTY OF EL PASO, STATE OF COLORADO

CONSTRUCTION PLANS

SPRING 2023

(SECTIONS 28 & 33, TOWNSHIP 12 SOUTH, RANGE 65 WEST)

GENERAL CONSTRUCTION NOTES:

1. THE LOCATION OF EXISTING UTILITIES ARE SHOWN IN AN APPROXIMATE WAY ONLY AND MAY NOT INCLUDE ALL UTILITIES. THE EXCAVATION CONTRACTOR SHALL DETERMINE THE EXACT LOCATION OF ALL EXISTING UTILITIES BEFORE COMMENCING WORK. THE CONTRACTOR AGREES TO BE FULLY RESPONSIBLE FOR ANY AND ALL DAMAGES WHICH MIGHT BE OCCASIONED BY HIS FAILURE TO EXACTLY LOCATED AND PRESERVE ANY AND ALL UTILITIES.
2. BEFORE COMMENCING ANY EXCAVATION, CALL **1-800-922-1987** FOR EXISTING UTILITY LOCATIONS.
3. THE CONTRACTOR WILL TAKE THE NECESSARY PRECAUTIONS TO PROTECT EXISTING UTILITIES FROM DAMAGE DUE TO THIS OPERATION. ANY DAMAGE TO THE UTILITIES WILL BE REPAIRED AT THE CONTRACTOR'S EXPENSE, AND ANY SERVICE DISRUPTION WILL BE SETTLED BY THE CONTRACTOR.
4. ALL BACKFILL, SUB-BASE AND/OR BASE COURSE (CLASS 6) MATERIAL SHALL BE COMPACTED TO THE SOILS ENGINEER'S RECOMMENDATIONS, AND APPROVED BY EL PASO COUNTY PLANNING AND COMMUNITY DEVELOPMENT (PCD).
5. ALL STATIONING IS CENTERLINE UNLESS OTHERWISE INDICATED. ALL ELEVATIONS ARE CENTERLINE UNLESS OTHERWISE INDICATED.
6. THE CONTRACTOR SHALL REVEGETATE ALL DISTURBED AREAS AS SOON AS POSSIBLE AND EROSION CONTROL SHALL BE INSTALLED AND MAINTAINED IN A FUNCTIONAL MANNER AT ALL TIMES. DEVELOPER RESPONSIBLE FOR MAINTAINING DISTURBED AREAS UNTIL REVEGETATION IS COMPLETE.
7. ALL DISTURBED PAVEMENT EDGES SHALL BE CUT TO NEAT LINES. REPAIR SHALL CONFORM TO THE EPC ECM APPENDIX K – 1.2C.
8. ADDITIONAL EROSION CONTROL STRUCTURES MAY BE REQUIRED AT THE TIME OF CONSTRUCTION.
9. BUILDING CONTRACTORS WILL BE RESPONSIBLE FOR CONSTRUCTING POSITIVE DRAINAGE AWAY FROM ALL STRUCTURES.
10. ASPHALT THICKNESS AND BASE COURSE THICKNESS (COMPACTED) FOR ROADS SHALL BE PER DESIGN REPORT BY OWNER'S GEOTECHNICAL ENGINEER. OWNER'S GEOTECHNICAL ENGINEER TO BE ON SITE AT TIME OF ROAD CONSTRUCTION TO EVALUATE SOIL CONDITIONS AND DETERMINE IF ADDITIONAL MEASURES ARE NECESSARY TO ASSURE STABILITY OF THE NEW ROADS. PAVEMENT DESIGN SHALL BE APPROVED BY PLANNING AND COMMUNITY DEVELOPMENT PRIOR TO CONSTRUCTION.
11. THE CONTRACTOR SHALL REVEGETATE ALL DISTURBED AREAS WITHIN 21 DAYS OF SUBSTANTIAL GRADING COMPLETION. EROSION CONTROL SHALL BE INSTALLED AND MAINTAINED IN A FUNCTIONAL MANNER AT ALL TIMES. DEVELOPER IS RESPONSIBLE FOR MAINTAINING DISTURBED AREAS UNTIL REVEGETATION IS COMPLETE.
12. TYPE M RIP-RAP WITH 4" OF TYPE II GRANULAR BEDDING AND MIRAFI 180N OR EQUAL MAY BE SUBSTITUTED WHERE TYPE L RIP-RAP WITH MIRAFI FW 700 OR EQUAL IS SPECIFIED
13. ALL MATERIALS AND INSTALLATION PROCEDURES SHALL BE IN COMPLIANCE WITH ANY AND ALL APPLICABLE EL PASO COUNTY STANDARDS.
14. LOCATION OF THE CONCRETE WASHOUT, STORAGE FOR MAINTENANCE EQUIPMENT AND TEMPORARY DISPOSAL AREAS WILL BE ADDED TO THIS PLAN BY SWMP ADMINISTRATOR UPON COORDINATION WITH SELECTED CONTRACTOR.

STANDARD NOTES FOR EL PASO COUNTY CONSTRUCTION PLANS:

1. ALL DRAINAGE AND ROADWAY CONSTRUCTION SHALL MEET THE STANDARDS AND SPECIFICATIONS OF THE CITY OF COLORADO SPRINGS/EL PASO COUNTY DRAINAGE CRITERIA MANUAL, VOLUMES 1 AND 2, AND THE EL PASO COUNTY ENGINEERING CRITERIA MANUAL.
2. CONTRACTOR SHALL BE RESPONSIBLE FOR THE NOTIFICATION AND FIELD NOTIFICATION OF ALL EXISTING UTILITIES, WHETHER SHOWN ON THE PLANS OR NOT, BEFORE BEGINNING CONSTRUCTION. LOCATION OF EXISTING UTILITIES SHALL BE VERIFIED BY THE CONTRACTOR PRIOR TO CONSTRUCTION. CALL 811 TO CONTACT THE UTILITY NOTIFICATION CENTER OF COLORADO (UNCC).
3. CONTRACTOR SHALL KEEP A COPY OF THESE APPROVED PLANS, THE GRADING AND EROSION CONTROL PLAN, THE STORMWATER MANAGEMENT PLAN (SWMP), THE SOILS AND GEOTECHNICAL REPORT, AND THE APPROPRIATE DESIGN AND CONSTRUCTION STANDARDS AND SPECIFICATIONS AT THE JOB SITE AT ALL TIMES, INCLUDING THE FOLLOWING:
   a. EL PASO COUNTY ENGINEERING CRITERIA MANUAL (ECM)
   b. CITY OF COLORADO SPRINGS/EL PASO COUNTY DRAINAGE CRITERIA MANUAL, VOLUMES 1 AND 2
   c. COLORADO DEPARTMENT OF TRANSPORTATION (CDOT) STANDARD SPECIFICATIONS FOR ROAD AND BRIDGE CONSTRUCTION
   d. CDOT M & S STANDARDS
4. NOTWITHSTANDING ANYTHING DEPICTED IN THESE PLANS IN WORDS OR GRAPHIC REPRESENTATION, ALL DESIGN AND CONSTRUCTION RELATED TO ROADS, STORM DRAINAGE AND EROSION CONTROL SHALL CONFORM TO THE STANDARDS AND REQUIREMENTS OF THE MOST RECENT VERSION OF THE RELEVANT ADOPTED EL PASO COUNTY STANDARDS, INCLUDING THE LAND DEVELOPMENT CODE, THE ENGINEERING CRITERIA MANUAL, THE DRAINAGE CRITERIA MANUAL, AND THE DRAINAGE CRITERIA MANUAL VOLUME 2. ANY DEVIATIONS FROM REGULATIONS AND STANDARDS MUST BE REQUESTED, AND APPROVED, IN WRITING. ANY MODIFICATIONS NECESSARY TO MEET CRITERIA AFTER-THE-FACT WILL BE ENTIRELY THE DEVELOPER'S RESPONSIBILITY TO RECTIFY.
5. IT IS THE DESIGN ENGINEER'S RESPONSIBILITY TO ACCURATELY SHOW EXISTING CONDITIONS, BOTH ONSITE AND OFFSITE, ON THE CONSTRUCTION PLANS. ANY MODIFICATIONS NECESSARY DUE TO CONFLICTS, OMISSIONS, OR CHANGED CONDITIONS WILL BE ENTIRELY THE DEVELOPER'S RESPONSIBILITY TO RECTIFY.
6. CONTRACTOR SHALL SCHEDULE A PRE-CONSTRUCTION MEETING WITH EL PASO COUNTY PLANNING AND COMMUNITY DEVELOPMENT – INSPECTIONS, PRIOR TO STARTING CONSTRUCTION.
7. IT IS THE CONTRACTOR'S RESPONSIBILITY TO UNDERSTAND THE REQUIREMENTS OF ALL JURISDICTIONAL AGENCIES AND TO OBTAIN ALL REQUIRED PERMITS, INCLUDING BUT NOT LIMITED TO EL PASO COUNTY EROSION AND STORMWATER QUALITY CONTROL PERMIT (ESQCP), REGIONAL BUILDING FLOODPLAIN DEVELOPMENT PERMIT, U.S. ARMY CORPS OF ENGINEERS-ISSUED 401 AND/OR 404 PERMITS, AND COUNTY AND STATE FUGITIVE DUST PERMITS.
8. CONTRACTOR SHALL NOT DEVIATE FROM THE PLANS WITHOUT FIRST OBTAINING WRITTEN APPROVAL FROM THE DESIGN ENGINEER AND PCD. CONTRACTOR SHALL NOTIFY THE DESIGN ENGINEER IMMEDIATELY UPON DISCOVERY OF ANY ERRORS OR INCONSISTENCIES.
9. ALL STORM DRAIN PIPE SHALL BE CLASS III RCP UNLESS OTHERWISE NOTED AND APPROVED BY PCD.
10. CONTRACTOR SHALL COORDINATE GEOTECHNICAL TESTING PER ECM STANDARDS. PAVEMENT DESIGN SHALL BE APPROVED BY EL PASO COUNTY PCD PRIOR TO PLACEMENT OF CURB AND GUTTER AND PAVEMENT.
11. ALL CONSTRUCTION TRAFFIC MUST ENTER/EXIT THE SITE AT APPROVED CONSTRUCTION ACCESS POINTS.
12. SIGHT VISIBILITY TRIANGLES AS IDENTIFIED IN THE PLANS SHALL BE PROVIDED AT ALL INTERSECTIONS. OBSTRUCTIONS GREATER THAN 18 INCHES ABOVE FLOWLINE ARE NOT ALLOWED WITHIN SIGHT TRIANGLES.
13. SIGNING AND STRIPING SHALL COMPLY WITH EL PASO COUNTY DEPARTMENT OF PUBLIC WORKS AND MUTCD CRITERIA.
14. CONTRACTOR SHALL OBTAIN ANY PERMITS REQUIRED BY EL PASO COUNTY DEPARTMENT OF PUBLIC WORKS, INCLUDING WORK WITHIN THE RIGHT-OF-WAY AND SPECIAL TRANSPORT PERMITS.
15. THE LIMITS OF CONSTRUCTION SHALL REMAIN WITHIN THE PROPERTY LINE UNLESS OTHERWISE NOTED. THE OWNER/DEVELOPER SHALL OBTAIN WRITTEN PERMISSION AND EASEMENTS, WHERE REQUIRED, FROM ADJOINING PROPERTY OWNER(S) PRIOR TO ANY OFF-SITE DISTURBANCE, GRADING, OR CONSTRUCTION.

SIGNING AND STRIPING NOTES:

1. ALL SIGNS AND PAVEMENT MARKINGS SHALL BE IN COMPLIANCE WITH THE CURRENT MANUAL ON UNIFORM TRAFFIC CONTROL DEVICES (MUTCD).
2. REMOVAL OF EXISTING PAVEMENT MARKINGS SHALL BE ACCOMPLISHED BY A METHOD THAT DOES NOT MATERIALLY DAMAGE THE PAVEMENT. THE PAVEMENT MARKINGS SHALL BE REMOVED TO THE EXTENT THAT THEY WILL NOT BE VISIBLE UNDER DAY OR NIGHT CONDITIONS. AT NO TIME WILL IT BE ACCEPTABLE TO PAINT OVER EXISTING PAVEMENT MARKINGS.
3. ANY DEVIATION FROM THE STRIPING AND SIGNING PLAN SHALL BE APPROVED BY EL PASO COUNTY PLANNING AND COMMUNITY DEVELOPMENT.
4. ALL SIGNS SHOWN ON THE SIGNING AND STRIPING PLAN SHALL BE NEW SIGNS. EXISTING SIGNS MAY REMAIN OR BE REUSED IF THEY MEET CURRENT EL PASO COUNTY AND MUTCD STANDARDS.
5. STREET NAME AND REGULATORY STOP SIGNS SHALL BE ON THE SAME POST AT INTERSECTIONS.
6. ALL REMOVED SIGNS SHALL BE DISPOSED OF IN A PROPER MANNER BY THE CONTRACTOR.
7. ALL STREET NAME SIGNS SHALL HAVE "D" SERIES LETTERS, WITH LOCAL ROADWAY SIGNS BEING 4" UPPER-LOWER CASE LETTERING ON 8" BLANK AND NON-LOCAL ROADWAY SIGNS BEING 6" LETTERING, UPPER-LOWER CASE ON 12" BLANK, WITH A WHITE BORDER THAT IS NOT RECESSED. MULTI-LANE ROADWAYS WITH SPEED LIMITS OF 40 MPH OR HIGHER SHALL HAVE 8" UPPER-LOWER CASE LETTERING ON 18" BLANK WITH A WHITE BORDER THAT IS NOT RECESSED. THE WIDTH OF THE NON-RECESSED WHITE BORDERS SHALL MATCH PAGE 255 OF THE 2012 MUTCD "STANDARD HIGHWAY SIGNS."
8. ALL TRAFFIC SIGNS SHALL HAVE A MINIMUM HIGH INTENSITY PRISMATIC GRADE SHEETING.
9. ALL LOCAL RESIDENTIAL STREET SIGNS SHALL BE MOUNTED ON A 1.75" X 1.75" SQUARE TUBE SIGN POST AND STUB POST BASE. FOR OTHER APPLICATIONS, REFER TO THE CDOT STANDARD S-614-8 REGARDING USE OF THE P2 TUBULAR STEEL POST SLIPBASE DESIGN.
10. ALL SIGNS SHALL BE SINGLE SHEET ALUMINUM WITH 0.100" MINIMUM THICKNESS.
11. ALL LIMIT LINES/STOP LINES, CROSSWALK LINES, PAVEMENT LEGENDS, AND ARROWS SHALL BE A MINIMUM 125 MIL THICKNESS PREFORMED THERMOPLASTIC PAVEMENT MARKINGS WITH TAPERED LEADING EDGES PER CDOT STANDARD S-627-1. WORD AND SYMBOL MARKINGS SHALL BE THE NARROW TYPE. STOP BARS SHALL BE 24" IN WIDTH. CROSSWALKS LINES SHALL BE 12" WIDE AND 8' LONG PER CDOT S-627-1.
12. ALL LONGITUDINAL LINES SHALL BE A MINIMUM 15MIL THICKNESS EPOXY PAINT. ALL NON-LOCAL RESIDENTIAL ROADWAYS SHALL INCLUDE BOTH RIGHT AND LEFT EDGE LINE STRIPING AND ANY ADDITIONAL STRIPING AS REQUIRED BY CDOT S-627-1.
13. THE CONTRACTOR SHALL NOTIFY EL PASO COUNTY PLANNING AND COMMUNITY DEVELOPMENT **(719) 520-6819** PRIOR TO AND UPON COMPLETION OF SIGNING AND STRIPING.
14. THE CONTRACTOR SHALL OBTAIN A WORK IN THE RIGHT OF WAY PERMIT FROM THE EL PASO COUNTY DEPARTMENT OF PUBLIC WORKS (DPW) PRIOR TO ANY SIGNAGE OR STRIPING WORK WITHIN AN EXISTING EL PASO COUNTY ROADWAY.

BENCHMARK:

EAST 1/16TH CORNER OF SECTION 28, TOWNSHIP 12 SOUTH, RANGE 65 WEST OF THE SIXTH PRINCIPLE MERIDIAN LOCATED AT SOUTHEAST CORNER OF VOLLMER ROAD AND POCO ROAD APPROXIMATELY 50 FEET SOUTH OF THE CENTERLINE OF POCO ROAD.
EL: 7211.95

BASIS OF BEARING:

THE SOUTH LINE OF THE SOUTHEAST QUARTER OF THE NORTHEAST QUARTER OF SECTION 28, TOWNSHIP 12 SOUTH, RANGE 65 WEST OF THE SIXTH PRINCIPAL MERIDIAN, BEING MONUMENTED AT THE WEST END WHICH IS THE SOUTHWEST CORNER OF THE SOUTHEAST QUARTER OF THE NORTHEAST QUARTER OF SAID SECTION 28, BY A 3-1/4" ALUMINUM SURVEYORS CAP STAMPED "ESI PLS 10376, 2006" AND AT THE EAST END, WHICH IS A 30' WITNESS CORNER TO THE EAST OF THE EAST QUARTER CORNER OF SAID SECTION 28, BY A 3-1/4" ALUMINUM SURVEYORS CAP STAMPED "ESI 10376, 2006", IS ASSUMED TO BEAR N89°08'28"E, A DISTANCE OF 1356.68 FEET.

CONSTRUCTION PLAN: SHEET INDEX

SHEET 1 OF 15	TITLE SHEET
SHEET 2 OF 15	INITIAL GRADING AND EROSION CONTROL PLAN
SHEET 3 OF 15	INTERIM GRADING AND EROSION CONTROL PLAN
SHEET 4 OF 15	VERTICAL GRADING AND EROSION CONTROL PLAN
SHEET 5 OF 15	GRADING AND EROSION CONTROL PLAN NOTES & DETAIL SHEET
SHEET 6 OF 15	GRADING AND EROSION CONTROL PLAN DETAIL SHEET
SHEET 7 OF 15	GRADING AND EROSION CONTROL PLAN DETAIL SHEET
SHEET 8 OF 15	KEY MAP WITH TYPICAL STREET SECTIONS
SHEET 9 OF 15	STREET IMPROVEMENT PLAN (MARICOPA COURT/BOISE COURT STA: 1+00-12+00)
SHEET 10 OF 15	STREET IMPROVEMENT PLAN (IDAHO FALLS/KNUCKLE STA:12+00-14+69, ESTES PARK STA: 1+00-2+82)
SHEET 11 OF 15	STREET IMPROVEMENT PLAN (BOULDER CITY DRIVE STA: 1+00-11+45)
SHEET 12 OF 15	PEDESTRIAN RAMP DETAILED GRADING
SHEET 13 OF 15	STREET LIGHT POLE LOCATION PLAN
SHEET 14 OF 15	STORM SEWER PLAN & PROFILE
SHEET 15 OF 15	DETAIL SHEET

NOTE:
THIS PROPERTY IS SUBJECT TO THE FINDINGS, SUMMARY AND CONCLUSIONS OF A SOIL, GEOLOGY & GEOLOGIC HAZARD STUDY PREPARED BY ENTECH ENGINEERING, INC. DATED APRIL 19, 2022.

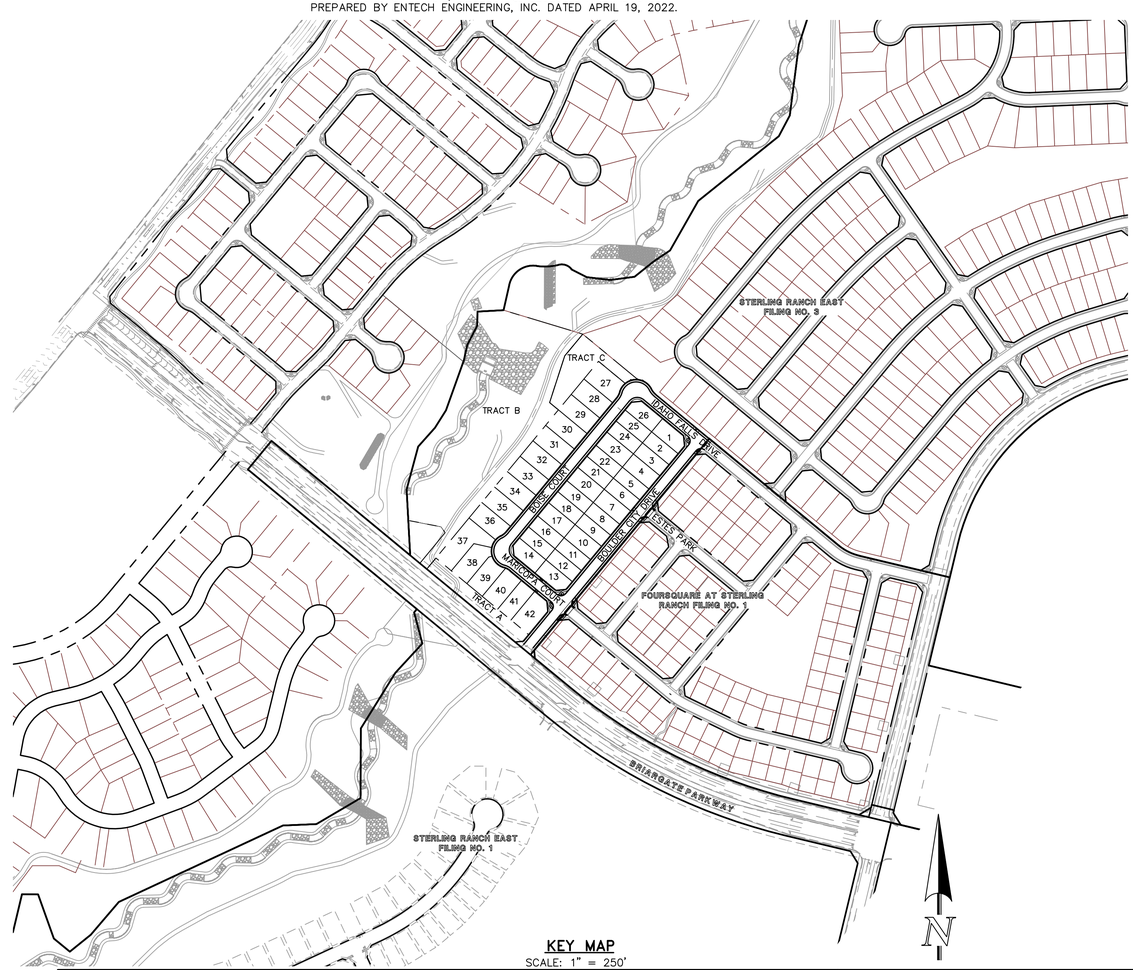

KEY MAP
SCALE: 1" = 250'

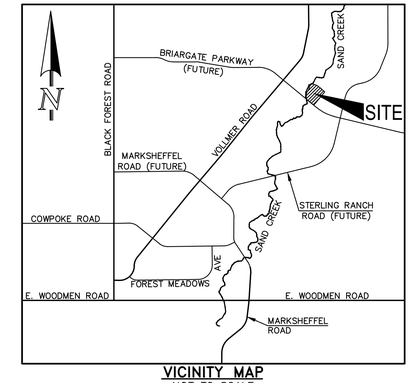

VICINITY MAP
NOT TO SCALE

AGENCIES:

DEVELOPER:	CLASSIC SRJ LAND, LLC 2138 FLYING HORSE CLUB DR. COLORADO SPRINGS, CO 80921 MR. LOREN J. MORELAND (719) 592-9333
CIVIL ENGINEER:	CLASSIC CONSULTING ENGINEERS & SURVEYORS 619 N. CASCADE AVENUE, SUITE 200 COLORADO SPRINGS, CO 80903 MR. KYLE R. CAMPBELL, P.E. (719) 785-2800
COUNTY ENGINEERING:	EL PASO COUNTY PLANNING AND COMMUNITY DEVELOPMENT 2880 INTERNATIONAL CIRCLE, SUITE 110 COLORADO SPRINGS, CO 80910 MR. JEFF RICE, (719) 520-7877
WATER & SANITATION DISTRICT:	FALCON AREA WATER & WASTEWATER AUTHORITY (FAWWA)
FIRE DISTRICT:	BLACK FOREST FIRE PROTECTION DISTRICT 11445 TEACHOUT ROAD COLORADO SPRINGS, CO 80908 CHIEF BRYAN JACK, (719) 495-4300
GAS COMPANY:	BLACK HILLS ENERGY 37 WIDEFIELD BOULEVARD WIDEFIELD, COLORADO 80911 MR. GEORGE M. PETERSON, (719) 392-3491
ELECTRIC COMPANY:	MOUNTAIN VIEW ELECTRIC P.O. BOX 1600 LIMON, COLORADO 80828 MR. LES ULFERS, (719) 495-2283
TELEPHONE COMPANY:	CENTURY LINK COMMUNICATIONS (LOCATORS) (800)-922-1987 A.T.&T. (LOCATORS) (719) 635-3674

APPROVALS:

DESIGN ENGINEER'S STATEMENT:

THESE DETAILED PLANS AND SPECIFICATIONS WERE PREPARED UNDER MY DIRECTION AND SUPERVISION. SAID PLANS AND SPECIFICATIONS HAVE BEEN PREPARED ACCORDING TO THE CRITERIA ESTABLISHED BY THE COUNTY FOR DETAILED ROADWAY, DRAINAGE, GRADING AND EROSION CONTROL PLANS AND SPECIFICATIONS, AND SAID PLANS AND SPECIFICATIONS ARE IN CONFORMITY WITH APPLICABLE MASTER DRAINAGE PLANS AND MASTER TRANSPORTATION PLANS. SAID PLANS AND SPECIFICATIONS MEET THE PURPOSES FOR WHICH THE PARTICULAR ROADWAY AND DRAINAGE FACILITIES ARE DESIGNED AND ARE CORRECT TO THE BEST OF MY KNOWLEDGE AND BELIEF. I ACCEPT RESPONSIBILITY FOR ANY LIABILITY DIRECTLY CAUSED BY THE NEGLIGENT ACTS, ERRORS, OR OMISSIONS I MAY HAVE MADE IN PREPARATION OF THESE DETAILED PLANS AND SPECIFICATIONS.

COLORADO LICENSED PROFESSIONAL ENGINEER KYLE R. CAMPBELL 29794 STATE OF COLORADO

8-9-24
DATE

KYLE R. CAMPBELL COLORADO P.E. #29794
FOR AND ON THE BEHALF OF CLASSIC CONSULTING ENGINEERS & SURVEYORS

OWNER/DEVELOPER'S STATEMENT:

I, THE OWNER/DEVELOPER HAVE READ AND WILL COMPLY WITH THE REQUIREMENTS OF THE EROSION CONTROL PLAN AND AS SPECIFIED IN THESE DETAILED PLANS AND SPECIFICATIONS.

V.P.

LOREN J. MORELAND

8/8/2024
DATE

EL PASO COUNTY:

COUNTY PLAN REVIEW IS PROVIDED ONLY FOR GENERAL CONFORMANCE WITH COUNTY DESIGN CRITERIA. THE COUNTY IS NOT RESPONSIBLE FOR THE ACCURACY AND ADEQUACY OF THE DESIGN, DIMENSIONS, AND/OR ELEVATIONS WHICH SHALL BE CONFIRMED AT THE JOB SITE. THE COUNTY THROUGH THE APPROVAL OF THIS DOCUMENT ASSUMES NO RESPONSIBILITY FOR COMPLETENESS AND/OR ACCURACY OF THIS DOCUMENT.

FILED IN ACCORDANCE WITH THE REQUIREMENTS OF THE EL PASO COUNTY LAND DEVELOPMENT CODE, DRAINAGE CRITERIA MANUAL, VOLUMES 1 AND 2 AND ENGINEERING CRITERIA MANUAL AS AMENDED.

IN ACCORDANCE WITH WITH ECM SECTION 1.12, THESE CONSTRUCTION DOCUMENTS WILL BE VALID FOR CONSTRUCTION FOR A PERIOD OF 2 YEARS FROM THE DATE SIGNED BY THE EL PASO COUNTY ENGINEER. IF CONSTRUCTION HAS NOT STARTED WITHIN THOSE 2 YEARS, THE PLANS WILL NEED TO BE RESUBMITTED FOR APPROVAL, INCLUDING PAYMENT OF REVIEW FEES AT THE PLANNING AND COMMUNITY DEVELOPMENT DIRECTOR'S DISCRETION.

Gilbert LaForce, P.E.
Digitally signed by Gilbert LaForce, P.E.
Reason: Authorized signatory as County Engineer designee
Date: 2024.09.23 14:47:29-06'00'

9/23/2024
DATE

JOSHUA PALMER, P.E.
COUNTY ENGINEER / ECM ADMINISTRATOR

PCD FILE # SF2237

48 HOURS BEFORE YOU DIG, CALL UTILITY LOCATORS
811
UTILITY NOTIFICATION CENTER OF COLORADO
IT'S THE LAW

THE LOCATIONS OF EXISTING UNDERGROUND UTILITIES ARE SHOWN IN AN APPROXIMATE WAY ONLY. THE CONTRACTOR SHALL DETERMINE THE EXACT LOCATION OF ALL EXISTING UTILITIES BEFORE COMMENCING WORK. THE CONTRACTOR SHALL BE FULLY RESPONSIBLE FOR ANY AND ALL DAMAGES WHICH MIGHT BE CAUSED BY HIS FAILURE TO EXACTLY LOCATE AND PRESERVE ANY AND ALL UNDERGROUND UTILITIES.

NO.	REVISION	DATE

REVIEW:
PREPARED UNDER MY DIRECTION AND SUPERVISION FOR AND ON BEHALF OF CLASSIC CONSULTING ENGINEERS AND SURVEYORS, LLC

COLORADO LICENSED PROFESSIONAL ENGINEER KYLE R. CAMPBELL 29794 STATE OF COLORADO

8-9-24
DATE

KYLE R. CAMPBELL COLORADO P.E. #29794

CLASSIC CONSULTING SM
619 N. Cascade Avenue, Suite 200 (719)785-0790
Colorado Springs, Colorado 80903 (719)785-0799(Fax)

STERLING RANCH EAST FILING NO. 2
CONSTRUCTION PLANS
TITLE SHEET

DESIGNED BY	JDP	SCALE		DATE	8/7/24
DRAWN BY	JDP	(H) 1"= N/A		SHEET	1 OF 15
CHECKED BY	KRC	(V) 1"= N/A		JOB NO.	1183.31

EPC 9/23/2024

LEGEND

(7130)	EXISTING CONTOUR
	PROPOSED LIMITS OF GRADING/ CONSTRUCTION SITE BOUNDARY
	BOUNDARY/R.O.W. LINE
	EXISTING FLOW DIRECTION
SF	SILT FENCE — (INSTALL PRIOR TO INITIAL PHASE WITH CONTINUED MAINTENANCE DURING INTERIM AND VERTICAL PHASES)
VTC	VEHICLE TRACKING CONTROL — (INSTALL PRIOR TO INITIAL PHASE WITH CONTINUED MAINTENANCE THROUGH INTERIM, VERTICAL PHASE OR SITE PAVING)

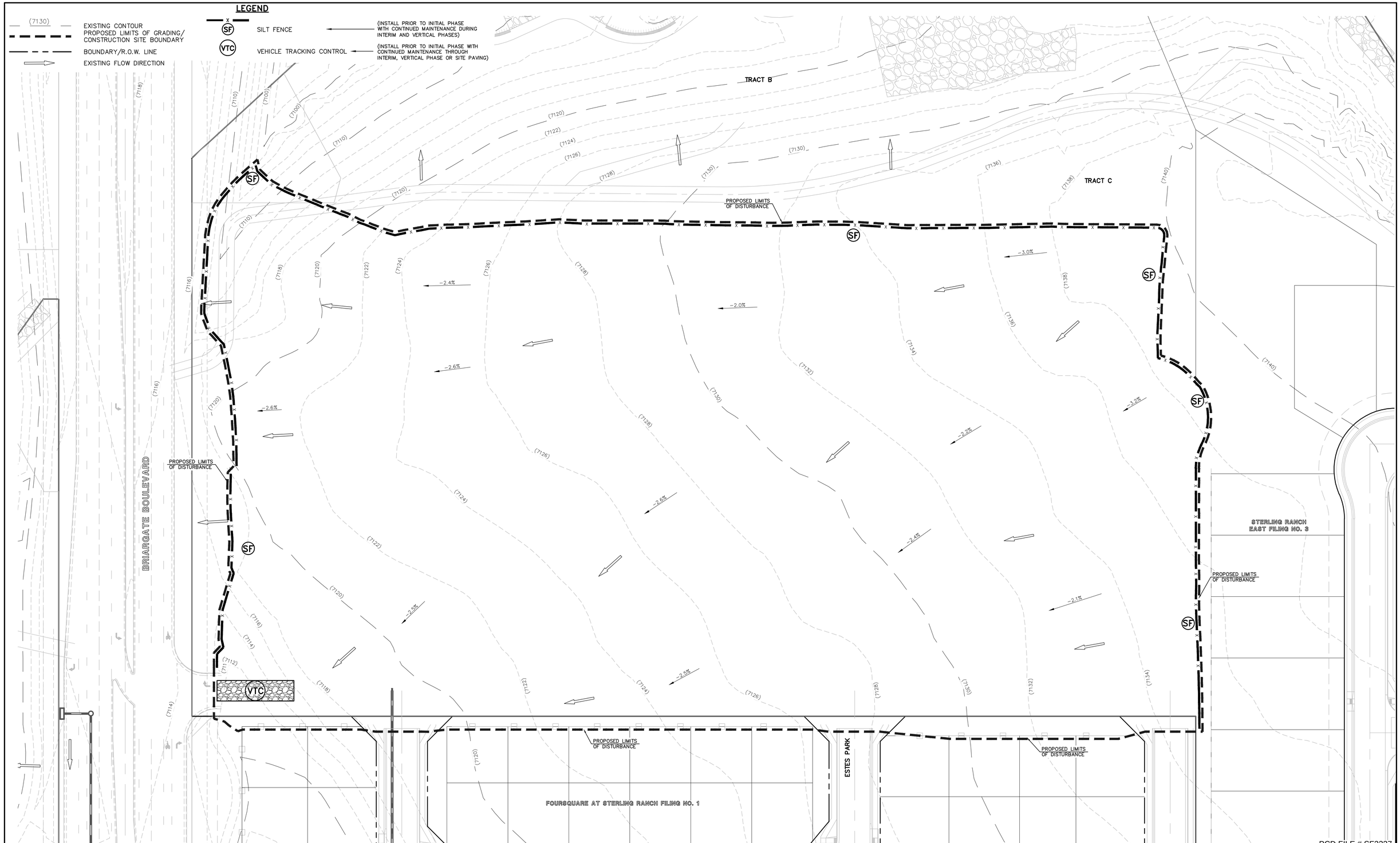

PCD FILE # SF2237

40 20 0 40 80

SCALE: 1" = 40'

NOTES:
SEE SHEETS 6–7 FOR LOT TEMPLATES AND EROSION CONTROL DETAILS.

THERE WILL BE NO ASPHALT, CONCRETE BATCH PLANTS AND MASONRY MIX STATIONS ON THIS SITE.

48 HOURS BEFORE YOU DIG, CALL UTILITY LOCATORS
811
UTILITY NOTIFICATION CENTER OF COLORADO
IT'S THE LAW

THE LOCATIONS OF EXISTING UNDERGROUND UTILITIES ARE SHOWN IN AN APPROXIMATE WAY ONLY. THE CONTRACTOR SHALL DETERMINE THE EXACT LOCATION OF ALL EXISTING UTILITIES BEFORE COMMENCING WORK. THE CONTRACTOR SHALL BE FULLY RESPONSIBLE FOR ANY AND ALL DAMAGES WHICH MIGHT BE CAUSED BY HIS FAILURE TO EXACTLY LOCATE AND PRESERVE ANY AND ALL UNDERGROUND UTILITIES.

NO.	REVISION	DATE

REVIEW:

PREPARED UNDER MY DIRECT SUPERVISION FOR AND ON BEHALF OF CLASSIC CONSULTING ENGINEERS AND SURVEYORS, LLC

COLORADO LICENSED 29794 KYLE RAY CAMPBELL PROFESSIONAL ENGINEER

8-9-24

KYLE R. CAMPBELL, P.E. #29794 — DATE

CLASSIC CONSULTING℠
619 N. Cascade Avenue, Suite 200
Colorado Springs, Colorado 80903
(719)785-0790
(719)785-0799(Fax)

STERLING RANCH EAST FILING NO. 2
CONSTRUCTION PLANS
INITIAL GRADING AND EROSION CONTROL PLAN

DESIGNED BY	JDP	SCALE		DATE	11/13/23
DRAWN BY	JDP	(H) 1"=	40'	SHEET 2	OF 15
CHECKED BY	KRC	(V) 1"=	N/A	JOB NO.	1183.31

EPC 9/23/2024

LEGEND

(7130)	EXISTING CONTOUR
7130	PROPOSED CONTOUR
	PROPOSED LIMITS OF GRADING/ CONSTRUCTION SITE BOUNDARY
	BOUNDARY/R.O.W. LINE
	EXISTING FLOW DIRECTION
	PROPOSED FLOW
"A"	A LOT
"B"	B LOT
"W/O"	WALKOUT LOT
"T"	TRANSITION LOT
"G"	GARDEN LOT
	PROPOSED INLET
	PROPOSED STORM SEWER PIPE
HP	PROPOSED HIGH POINT
LP	PROPOSED LOW POINT

CCM PHASING

TSB	TEMPORARY SEDIMENT BASIN	(INSTALLED DURING INTERIM PHASE WITH CONTINUED MAINTENANCE UNTIL VERTICAL PHASE)
SF	SILT FENCE	(INSTALL PRIOR TO INITIAL PHASE WITH CONTINUED MAINTENANCE DURING INTERIM AND VERTICAL PHASES)
SCL	SEDIMENT CONTROL LOG	(INSTALLED DURING INTERIM PHASE WITH CONTINUED MAINTENANCE DURING UNTIL VERTICAL PHASES)
IP	INLET PROTECTION	(INSTALL DURING INTERIM PHASE WITH CONTINUED MAINTENANCE THROUGH VERTICAL PHASE)
VTC	VEHICLE TRACKING CONTROL	(INSTALL PRIOR TO INITIAL PHASE WITH CONTINUED MAINTENANCE THROUGH INTERIM, VERTICAL PHASE OR SITE PAVING)
ED	EARTH DIKE	(INSTALLED DURING INTERIM PHASE WITH CONTINUED MAINTENANCE UNTIL VERTICAL PHASE)

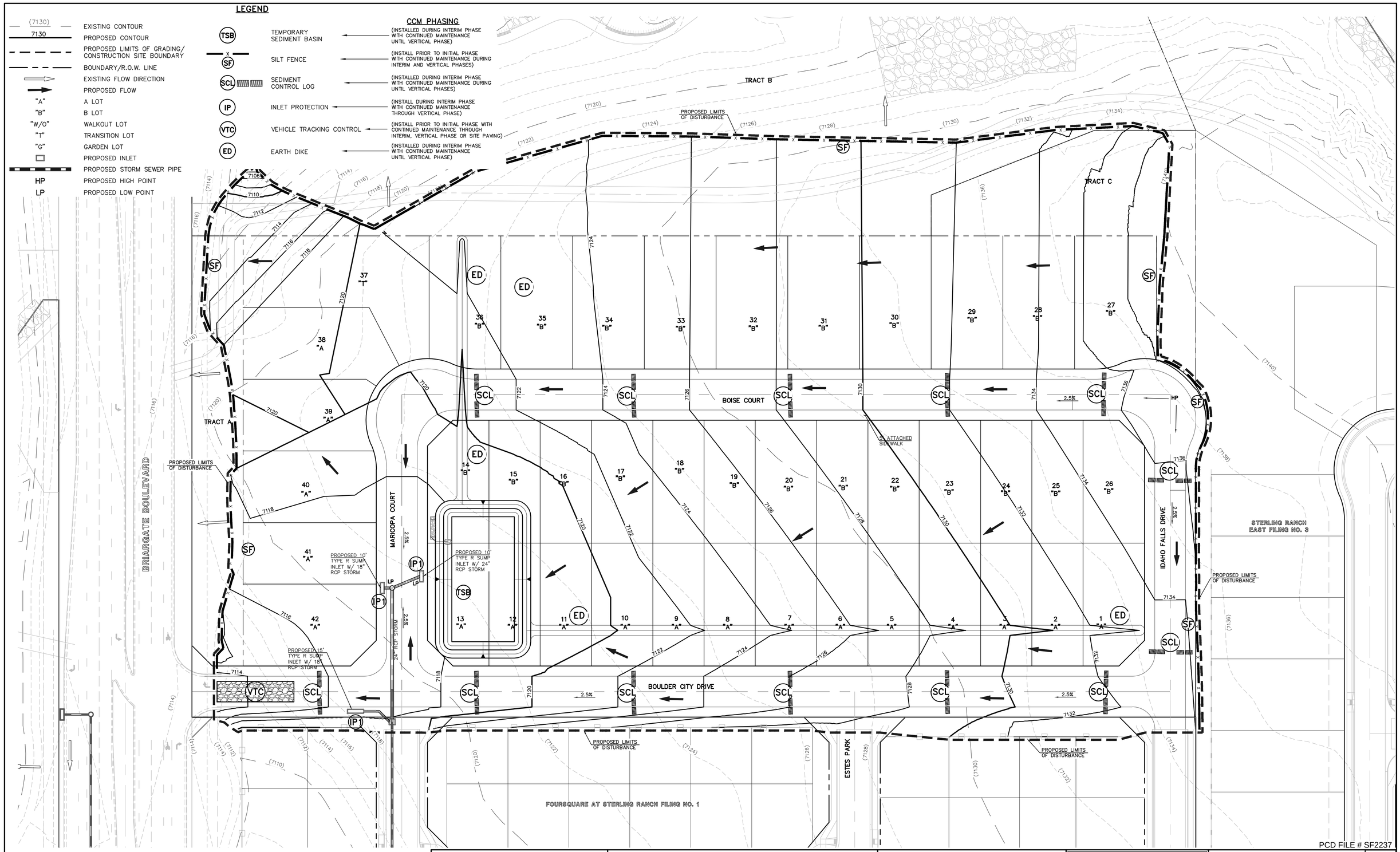

SCALE: 1" = 40'

NOTES:
SEE SHEETS 6–7 FOR LOT TEMPLATES AND EROSION CONTROL DETAILS.

THERE WILL BE NO ASPHALT, CONCRETE BATCH PLANTS AND MASONRY MIX STATIONS ON THIS SITE.

48 HOURS BEFORE YOU DIG, CALL UTILITY LOCATORS
811
UTILITY NOTIFICATION CENTER OF COLORADO
IT'S THE LAW

THE LOCATIONS OF EXISTING UNDERGROUND UTILITIES ARE SHOWN IN AN APPROXIMATE WAY ONLY. THE CONTRACTOR SHALL DETERMINE THE EXACT LOCATION OF ALL EXISTING UTILITIES BEFORE COMMENCING WORK. THE CONTRACTOR SHALL BE FULLY RESPONSIBLE FOR ANY AND ALL DAMAGES WHICH MIGHT BE CAUSED BY HIS FAILURE TO EXACTLY LOCATE AND PRESERVE ANY AND ALL UNDERGROUND UTILITIES.

NO.	REVISION	DATE

REVIEW:

PREPARED UNDER MY DIRECT SUPERVISION FOR AND ON BEHALF OF CLASSIC CONSULTING ENGINEERS AND SURVEYORS, LLC

COLORADO LICENSED 29794 KYLE RAYE CAMPBELL PROFESSIONAL ENGINEER

KYLE RAYE CAMPBELL, P.E. #29794 — 8-9-24 DATE

CLASSIC CONSULTING
619 N. Cascade Avenue, Suite 200
Colorado Springs, Colorado 80903
(719)785-0790
(719)785-0799(Fax)

STERLING RANCH EAST FILING NO. 2 CONSTRUCTION PLANS

INTERIM GRADING AND EROSION CONTROL PLAN

DESIGNED BY	JDP	SCALE		DATE	11/13/23
DRAWN BY	JDP	(H) 1"= 40'		SHEET	3 OF 15
CHECKED BY	KRC	(V) 1"= N/A		JOB NO.	1183.31

EPC 9/23/2024

LEGEND

(7130)	EXISTING CONTOUR
7130	PROPOSED CONTOUR
	PROPOSED LIMITS OF GRADING/ CONSTRUCTION SITE BOUNDARY
	BOUNDARY/R.O.W. LINE
	EXISTING FLOW DIRECTION
	PROPOSED FLOW
"A"	A LOT
"B"	B LOT
"W/O"	WALKOUT LOT
"T"	TRANSITION LOT
"G"	GARDEN LOT
	PROPOSED INLET
	PROPOSED STORM SEWER PIPE
HP	PROPOSED HIGH POINT
LP	PROPOSED LOW POINT

CCM PHASING

SF	SILT FENCE	(INSTALL PRIOR TO INITIAL PHASE WITH CONTINUED MAINTENANCE DURING INTERIM AND VERTICAL PHASES)
IP	INLET PROTECTION	(INSTALL DURING INTERIM PHASE WITH CONTINUED MAINTENANCE THROUGH VERTICAL PHASE)
VTC	VEHICLE TRACKING CONTROL	(INSTALL PRIOR TO INITIAL PHASE WITH CONTINUED MAINTENANCE THROUGH INTERIM, VERTICAL PHASE OR SITE PAVING)
ECB	EROSION CONTROL BLANKET	(INSTALL DURING VERTICAL PHASE WITH CONTINUED MAINTENANCE THROUGH VERTICAL PHASE)
SM	SEEDING & MULCHING	(INSTALL DURING VERTICAL PHASE WITH CONTINUED MAINTENANCE THROUGH VERTICAL PHASE)

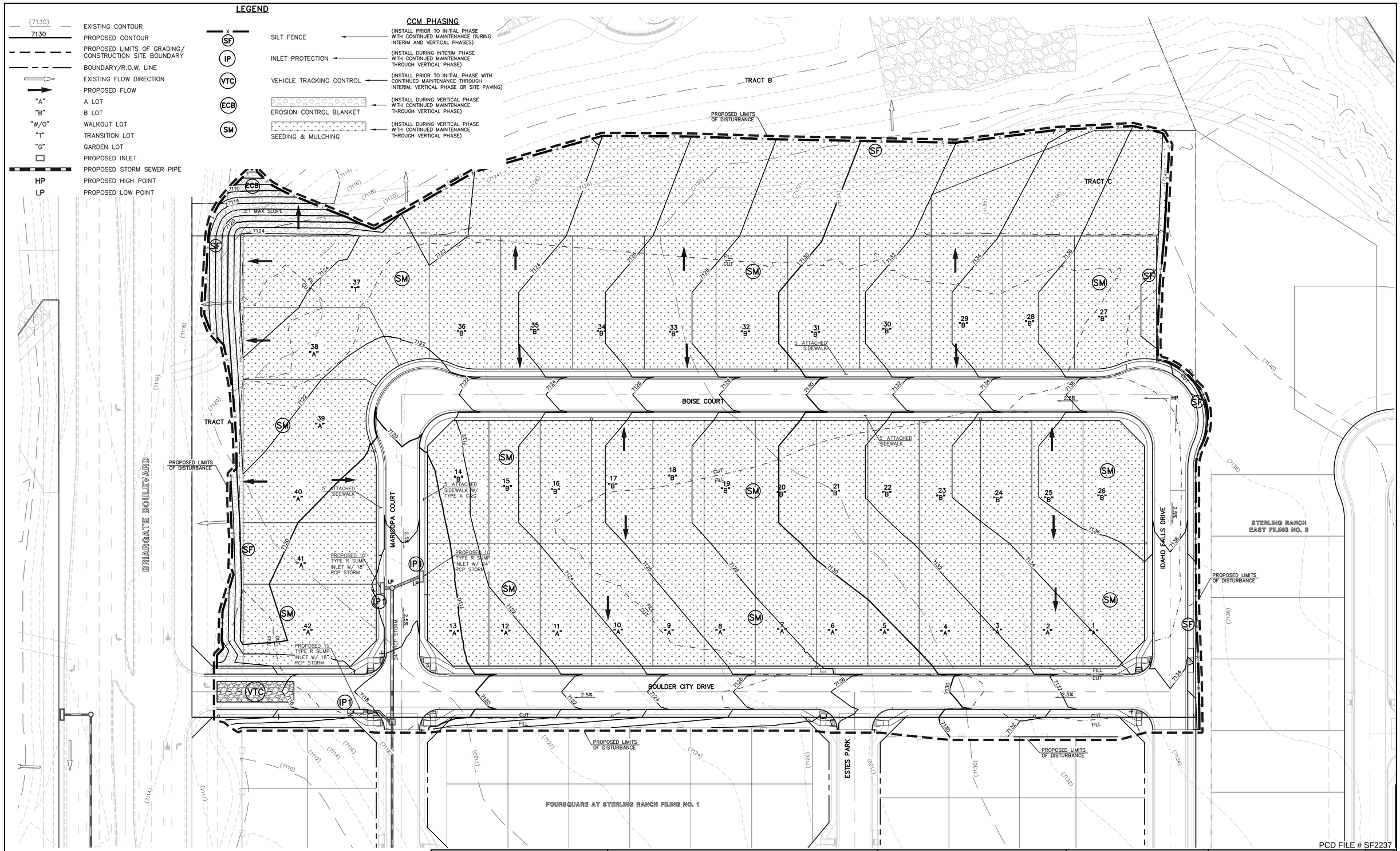

40 20 0 40 80

SCALE: 1" = 40'

NOTES:
SEE SHEETS 6–7 FOR LOT TEMPLATES AND EROSION CONTROL DETAILS.

THERE WILL BE NO ASPHALT, CONCRETE BATCH PLANTS AND MASONRY MIX STATIONS ON THIS SITE.

48 HOURS BEFORE YOU DIG, CALL UTILITY LOCATORS
811
UTILITY NOTIFICATION CENTER OF COLORADO
IT'S THE LAW

THE LOCATIONS OF EXISTING UNDERGROUND UTILITIES ARE SHOWN IN AN APPROXIMATE WAY ONLY. THE CONTRACTOR SHALL DETERMINE THE EXACT LOCATION OF ALL EXISTING UTILITIES BEFORE COMMENCING WORK. THE CONTRACTOR SHALL BE FULLY RESPONSIBLE FOR ANY AND ALL DAMAGES WHICH MIGHT BE CAUSED BY HIS FAILURE TO EXACTLY LOCATE AND PRESERVE ANY AND ALL UNDERGROUND UTILITIES.

NO.	REVISION	DATE

REVIEW:

PREPARED UNDER MY DIRECT SUPERVISION FOR AND ON BEHALF OF CLASSIC CONSULTING ENGINEERS AND SURVEYORS, LLC

COLORADO LICENSED 29794 KYLE RAYE CAMPBELL PROFESSIONAL ENGINEER

KYLE R. CAMPBELL, P.E. #29794 — 8-9-24 DATE

CLASSIC CONSULTING
619 N. Cascade Avenue, Suite 200
Colorado Springs, Colorado 80903
(719)785-0790
(719)785-0799(Fax)

STERLING RANCH EAST FILING NO. 2
CONSTRUCTION PLANS
VERTICAL GRADING AND EROSION CONTROL PLAN

DESIGNED BY	JDP	SCALE		DATE	11/13/23
DRAWN BY	JDP	(H) 1"= 40'		SHEET	4 OF 15
CHECKED BY	KRC	(V) 1"= N/A		JOB NO.	1183.31

EPC 9/23/2024

EL PASO COUNTY GRADING AND EROSION CONTROL NOTES:

1. STORMWATER DISCHARGES FROM CONSTRUCTION SITES SHALL NOT CAUSE OR THREATEN TO CAUSE POLLUTION, CONTAMINATION, OR DEGRADATION OF STATE WATERS. ALL WORK AND EARTH DISTURBANCE SHALL BE DONE IN A MANNER THAT MINIMIZES POLLUTION OF ANY ON-SITE OR OFF-SITE WATERS, INCLUDING WETLANDS.

2. NOTWITHSTANDING ANYTHING DEPICTED IN THESE PLANS IN WORDS OR GRAPHIC REPRESENTATION, ALL DESIGN AND CONSTRUCTION RELATED TO ROADS, STORM DRAINAGE AND EROSION CONTROL SHALL CONFORM TO THE STANDARDS AND REQUIREMENTS OF THE MOST RECENT VERSION OF THE RELEVANT ADOPTED EL PASO COUNTY STANDARDS, INCLUDING THE LAND DEVELOPMENT CODE, THE ENGINEERING CRITERIA MANUAL, THE DRAINAGE CRITERIA MANUAL, AND THE DRAINAGE CRITERIA MANUAL VOLUME 2. ANY DEVIATIONS FROM REGULATIONS AND STANDARDS MUST BE REQUESTED, AND APPROVED, IN WRITING.

3. A SEPARATE STORMWATER MANAGEMENT PLAN (SMWP) FOR THIS PROJECT SHALL BE COMPLETED AND AN EROSION AND STORMWATER QUALITY CONTROL PERMIT (ESQCP) ISSUED PRIOR TO COMMENCING CONSTRUCTION. MANAGEMENT OF THE SWMP DURING CONSTRUCTION IS THE RESPONSIBILITY OF THE DESIGNATED QUALIFIED STORMWATER MANAGER OR CERTIFIED EROSION CONTROL INSPECTOR. THE SWMP SHALL BE LOCATED ON SITE AT ALL TIMES DURING CONSTRUCTION AND SHALL BE KEPT UP TO DATE WITH WORK PROGRESS AND CHANGES IN THE FIELD.

4. ONCE THE ESQCP IS APPROVED AND A "NOTICE TO PROCEED" HAS BEEN ISSUED, THE CONTRACTOR MAY INSTALL THE INITIAL STAGE EROSION AND SEDIMENT CONTROL MEASURES AS INDICATED ON THE APPROVED GEC. A PRECONSTRUCTION MEETING BETWEEN THE CONTRACTOR, ENGINEER, AND EL PASO COUNTY WILL BE HELD PRIOR TO ANY CONSTRUCTION. IT IS THE RESPONSIBILITY OF THE APPLICANT TO COORDINATE THE MEETING TIME AND PLACE WITH COUNTY STAFF.

5. CONTROL MEASURES MUST BE INSTALLED PRIOR TO COMMENCEMENT OF ACTIVITIES THAT COULD CONTRIBUTE POLLUTANTS TO STORMWATER. CONTROL MEASURES FOR ALL SLOPES, CHANNELS, DITCHES, AND DISTURBED LAND AREAS SHALL BE INSTALLED IMMEDIATELY UPON COMPLETION OF THE DISTURBANCE.

6. ALL TEMPORARY SEDIMENT AND EROSION CONTROL MEASURES SHALL BE MAINTAINED AND REMAIN IN EFFECTIVE OPERATING CONDITION UNTIL PERMANENT SOIL EROSION CONTROL MEASURES ARE IMPLEMENTED AND FINAL STABILIZATION IS ESTABLISHED. ALL PERSONS ENGAGED IN LAND DISTURBANCE ACTIVITIES SHALL ASSESS THE ADEQUACY OF CONTROL MEASURES AT THE SITE AND IDENTIFY IF CHANGES TO THOSE CONTROL MEASURES ARE NEEDED TO ENSURE THE CONTINUED EFFECTIVE PERFORMANCE OF THE CONTROL MEASURES. ALL CHANGES TO TEMPORARY SEDIMENT AND EROSION CONTROL MEASURES MUST BE INCORPORATED INTO THE STORMWATER MANAGEMENT PLAN.

7. TEMPORARY STABILIZATION SHALL BE IMPLEMENTED ON DISTURBED AREAS AND STOCKPILES WHERE GROUND DISTURBING CONSTRUCTION ACTIVITY HAS PERMANENTLY CEASED OR TEMPORARILY CEASED FOR LONGER THAN 14 DAYS.

8. FINAL STABILIZATION MUST BE IMPLEMENTED AT ALL APPLICABLE CONSTRUCTION SITES. FINAL STABILIZATION IS ACHIEVED WHEN ALL GROUND DISTURBING ACTIVITIES ARE COMPLETE AND ALL DISTURBED AREAS EITHER HAVE A UNIFORM VEGETATIVE COVER WITH INDIVIDUAL PLANT DENSITY OF 70 PERCENT OF PRE-DISTURBANCE LEVELS ESTABLISHED OR EQUIVALENT PERMANENT ALTERNATIVE STABILIZATION METHOD IS IMPLEMENTED. ALL TEMPORARY SEDIMENT AND EROSION CONTROL MEASURES SHALL BE REMOVED UPON FINAL STABILIZATION AND BEFORE PERMIT CLOSURE.

9. ALL PERMANENT STORMWATER MANAGEMENT FACILITIES SHALL BE INSTALLED AS DESIGNED IN THE APPROVED PLANS. ANY PROPOSED CHANGES THAT AFFECT THE DESIGN OR FUNCTION OF PERMANENT STORMWATER MANAGEMENT STRUCTURES MUST BE APPROVED BY THE ECM ADMINISTRATOR PRIOR TO IMPLEMENTATION.

10. EARTH DISTURBANCES SHALL BE CONDUCTED IN SUCH A MANNER SO AS TO EFFECTIVELY MINIMIZE ACCELERATED SOIL EROSION AND RESULTING SEDIMENTATION. ALL DISTURBANCES SHALL BE DESIGNED, CONSTRUCTED, AND COMPLETED SO THAT THE EXPOSED AREA OF ANY DISTURBED LAND SHALL BE LIMITED TO THE SHORTEST PRACTICAL PERIOD OF TIME. PRE-EXISTING VEGETATION SHALL BE PROTECTED AND MAINTAINED WITHIN 50 HORIZONTAL FEET OF A WATERS OF THE STATE UNLESS SHOWN TO BE INFEASIBLE AND SPECIFICALLY REQUESTED AND APPROVED.

11. COMPACTION OF SOIL MUST BE PREVENTED IN AREAS DESIGNATED FOR INFILTRATION CONTROL MEASURES OR WHERE FINAL STABILIZATION WILL BE ACHIEVED BY VEGETATIVE COVER. AREAS DESIGNATED FOR INFILTRATION CONTROL MEASURES SHALL ALSO BE PROTECTED FROM SEDIMENTATION DURING CONSTRUCTION UNTIL FINAL STABILIZATION IS ACHIEVED. IF COMPACTION PREVENTION IS NOT FEASIBLE DUE TO SITE CONSTRAINTS, ALL AREAS DESIGNATED FOR INFILTRATION AND VEGETATION CONTROL MEASURES MUST BE LOOSENED PRIOR TO INSTALLATION OF THE CONTROL MEASURE(S).

12. ANY TEMPORARY OR PERMANENT FACILITY DESIGNED AND CONSTRUCTED FOR THE CONVEYANCE OF STORMWATER AROUND, THROUGH, OR FROM THE EARTH DISTURBANCE AREA SHALL BE A STABILIZED CONVEYANCE DESIGNED TO MINIMIZE EROSION AND THE DISCHARGE OF SEDIMENT OFF SITE.

13. CONCRETE WASH WATER SHALL BE CONTAINED AND DISPOSED OF IN ACCORDANCE WITH THE SWMP. NO WASH WATER SHALL BE DISCHARGED TO OR ALLOWED TO ENTER STATE WATERS, INCLUDING ANY SURFACE OR SUBSURFACE STORM DRAINAGE SYSTEM OR FACILITIES. CONCRETE WASHOUTS SHALL NOT BE LOCATED IN AN AREA WHERE SHALLOW GROUNDWATER MAY BE PRESENT, OR WITHIN 50 FEET OF A SURFACE WATER BODY, CREEK OR STREAM.

14. DURING DEWATERING OPERATIONS OF UNCONTAMINATED GROUND WATER MAY BE DISCHARGED ON SITE, BUT SHALL NOT LEAVE THE SITE IN THE FORM OF SURFACE RUNOFF UNLESS AN APPROVED STATE DEWATERING PERMIT IS IN PLACE.

15. EROSION CONTROL BLANKETING OR OTHER PROTECTIVE COVERING SHALL BE USED ON SLOPES STEEPER THAN 3:1.

16. CONTRACTOR SHALL BE RESPONSIBLE FOR THE REMOVAL OF ALL WASTES FROM THE CONSTRUCTION SITE FOR DISPOSAL IN ACCORDANCE WITH LOCAL AND STATE REGULATORY REQUIREMENTS. NO CONSTRUCTION DEBRIS, TREE SLASH, BUILDING MATERIAL WASTES OR UNUSED BUILDING MATERIALS SHALL BE BURIED, DUMPED, OR DISCHARGED AT THE SITE.

17. WASTE MATERIALS SHALL NOT BE TEMPORARILY PLACED OR STORED IN THE STREET, ALLEY, OR OTHER PUBLIC WAY, UNLESS IN ACCORDANCE WITH AN APPROVED TRAFFIC CONTROL PLAN. CONTROL MEASURES MAY BE REQUIRED BY EL PASO COUNTY ENGINEERING IF DEEMED NECESSARY, BASED ON SPECIFIC CONDITIONS AND CIRCUMSTANCES.

18. TRACKING OF SOILS AND CONSTRUCTION DEBRIS OFF-SITE SHALL BE MINIMIZED. MATERIALS TRACKED OFF-SITE SHALL BE CLEANED UP AND PROPERLY DISPOSED OF IMMEDIATELY.

19. THE OWNER/DEVELOPER SHALL BE RESPONSIBLE FOR THE REMOVAL OF ALL CONSTRUCTION DEBRIS, DIRT, TRASH, ROCK, SEDIMENT, SOIL, AND SAND THAT MAY ACCUMULATE IN ROADS, STORM DRAINS AND OTHER DRAINAGE CONVEYANCE SYSTEMS AND STORMWATER APPURTENANCES AS A RESULT OF SITE DEVELOPMENT.

20. THE QUANTITY OF MATERIALS STORED ON THE PROJECT SITE SHALL BE LIMITED, AS MUCH AS PRACTICAL, TO THAT QUANTITY REQUIRED TO PERFORM THE WORK IN AN ORDERLY SEQUENCE. ALL MATERIALS STORED ON-SITE SHALL BE STORED IN A NEAT, ORDERLY MANNER, IN THEIR ORIGINAL CONTAINERS, WITH ORIGINAL MANUFACTURER'S LABELS.

21. NO CHEMICAL(S) HAVING THE POTENTIAL TO BE RELEASED IN STORMWATER ARE TO BE STORED OR USED ONSITE UNLESS PERMISSION FOR THE USE OF SUCH CHEMICAL(S) IS GRANTED IN WRITING BY THE ECM ADMINISTRATOR. IN GRANTING APPROVAL FOR THE USE OF SUCH CHEMICAL(S), SPECIAL CONDITIONS AND MONITORING MAY BE REQUIRED.

22. BULK STORAGE OF ALLOWED PETROLEUM PRODUCTS OR OTHER ALLOWED LIQUID CHEMICALS IN EXCESS OF 55 GALLONS SHALL REQUIRE ADEQUATE SECONDARY CONTAINMENT PROTECTION TO CONTAIN ALL SPILLS ONSITE AND TO PREVENT ANY SPILLED MATERIALS FROM ENTERING STATE WATERS, ANY SURFACE OR SUBSURFACE STORM DRAINAGE SYSTEM OR OTHER FACILITIES.

23. NO PERSON SHALL CAUSE THE IMPEDIMENT OF STORMWATER FLOW IN THE CURB AND GUTTER OR DITCH EXCEPT WITH APPROVED SEDIMENT CONTROL MEASURES.

24. OWNER/DEVELOPER AND THEIR AGENTS SHALL COMPLY WITH THE "COLORADO WATER QUALITY CONTROL ACT" (TITLE 25, ARTICLE 8, CRS), AND THE "CLEAN WATER ACT" (33 USC 1344), IN ADDITION TO THE REQUIREMENTS OF THE LAND DEVELOPMENT CODE, DCM VOLUME II AND THE ECM APPENDIX I. ALL APPROPRIATE PERMITS MUST BE OBTAINED BY THE CONTRACTOR PRIOR TO CONSTRUCTION (1041, NPDES, FLOODPLAIN, 404, FUGITIVE DUST, ETC.). IN THE EVENT OF CONFLICTS BETWEEN THESE REQUIREMENTS AND OTHER LAWS, RULES, OR REGULATIONS OF OTHER FEDERAL, STATE, LOCAL, OR COUNTY AGENCIES, THE MOST RESTRICTIVE LAWS, RULES, OR REGULATIONS SHALL APPLY.

25. ALL CONSTRUCTION TRAFFIC MUST ENTER/EXIT THE SITE ONLY AT APPROVED CONSTRUCTION ACCESS POINTS.

26. PRIOR TO CONSTRUCTION THE PERMITTEE SHALL VERIFY THE LOCATION OF EXISTING UTILITIES.

27. A WATER SOURCE SHALL BE AVAILABLE ON SITE DURING EARTHWORK OPERATIONS AND SHALL BE UTILIZED AS REQUIRED TO MINIMIZE DUST FROM EARTHWORK EQUIPMENT AND WIND.

28. THE SOILS REPORT FOR THIS SITE HAS BEEN PREPARED BY ENTECH ENGINEERING, INC. DATED APRIL 19, 2022 AND SHALL BE CONSIDERED A PART OF THESE PLANS.

29. AT LEAST TEN (10) DAYS PRIOR TO THE ANTICIPATED START OF CONSTRUCTION, FOR PROJECTS THAT WILL DISTURB ONE (1) ACRE OR MORE, THE OWNER OR OPERATOR OF CONSTRUCTION ACTIVITY SHALL SUBMIT A PERMIT APPLICATION FOR STORMWATER DISCHARGE TO THE COLORADO DEPARTMENT OF PUBLIC HEALTH AND ENVIRONMENT, WATER QUALITY DIVISION. THE APPLICATION CONTAINS CERTIFICATION OF COMPLETION OF A STORMWATER MANAGEMENT PLAN (SWMP), OF WHICH THIS GRADING AND EROSION CONTROL PLAN MAY BE A PART. FOR INFORMATION OR APPLICATION MATERIALS CONTACT:

COLORADO DEPARTMENT OF PUBLIC HEALTH AND ENVIRONMENT
WATER QUALITY CONTROL DIVISION
WQCD - PERMITS
4300 CHERRY CREEK DRIVE SOUTH
DENVER, CO 80246-1530
ATTN: PERMITS UNIT

CONSTRUCTION CONTROL MEASURES NOTES:

1. CONTRACTOR TO DETERMINE AREAS USED FOR STAGING, STORAGE OF MATERIALS, SOILS (STOCKPILES) OR WASTES AND SHALL MARK ON THE SITE SWMP AT ALL TIMES. THE USE OF CONSTRUCTION OFFICE TRAILERS REQUIRES PCD PERMITTING.

2. THE PROPOSED GRADING/EROSION CONTROL PLAN (SHEET 2) SHOW AND CALL-OUT THE 'INITIAL' AND 'INTERIM' STAGE OF CONSTRUCTION CONTROL MEASURES.

3. 'FINAL' CONSTRUCTION CONTROL MEASURES ARE STABILIZED/DEVELOPED LOTS, CONSTRUCTED ROADS, RE-SEEDED OPEN SPACE, AND CONSTRUCTED DETENTION PONDS. A PLAN IS NOT NEEDED FOR THE FINAL STAGE.

EROSION CONTROL CRITERIA:

EROSION CONTROL MEASURES SHALL BE IMPLEMENTED IN A MANNER THAT WILL PROTECT PROPERTIES AND PUBLIC FACILITIES FROM THE ADVERSE EFFECTS OF EROSION AND SEDIMENTATION AS A RESULT OF CONSTRUCTION AND EARTHWORK ACTIVITIES WITHIN THE PROJECT SITE.

1.) THE OMISSION FROM OR THE INCLUSION OF UTILITY LOCATIONS ON THE PLANS IS NOT TO BE CONSIDERED AS THE NON-EXISTENCE OF OR A DEFINITE LOCATION OF EXISTING UNDERGROUND UTILITIES.

2.) DURING GRADING OPERATIONS, LOCATE AND SET THE STRAW BALE CHECK DAMS AND SILT FENCES AS SHOWN ON THE EROSION CONTROL PLAN. AT THIS TIME RESEED ALL DISTURBED AREAS WITH AN EL PASO COUNTY APPROVED SEED MIX.

3.) SEEDING APPLICATION: DRILLED TO A DEPTH OF .25" TO .50" INTO SOIL WHERE POSSIBLE. BROADCAST AND RAKED TO COVER ON STEEPER THAN 3:1 SLOPES WHERE ACCESS IS LIMITED OR UNSAFE FOR EQUIPMENT.

4.) MULCHING REQUIREMENT AND APPLICATION: 1.5 TONS PER ACRE NATIVE HAY MECHANICALLY CRIMPED INTO SOIL.

5.) THE STRAW BALE CHECK DAMS AND SILT FENCES SHALL BE KEPT IN PLACE AND MAINTAINED UNTIL EROSION AND SEDIMENTATION POTENTIAL IS MITIGATED. REMOVAL OF SILT AND SEDIMENT COLLECTED BY THE STRAW BALES IS REQUIRED ONCE IT REACHES HALF THE HEIGHT OF THE STRAW BALES OR SILT FENCE.

6.) SOIL EROSION CONTROL MEASURES FOR ALL SLOPES, CHANNELS, DITCHES, OR ANY DISTURBED LAND AREA SHALL BE COMPLETED WITHIN TWENTY-ONE (21) CALENDAR DAYS AFTER FINAL GRADING, OR FINAL EARTH DISTURBANCE, HAS BEEN COMPLETED. DISTURBED AREAS AND STOCKPILES WHICH ARE NOT AT FINAL GRADE BUT WILL REMAIN DORMANT FOR LONGER THAT 30 DAYS SHALL ALSO BE MULCHED WITHIN 21 DAYS AFTER INTERIM GRADING. AN AREA THAT IS GOING TO REMAIN IN AN INTERIM STATE FOR MORE THAT 60 DAYS SHALL ALSO BE SEEDED. ON A CASE-BY-CASE BASIS, THE MS4 PERMITTEE MAY ALLOW ANOTHER APPROPRIATE BMP TO BE IN PLACE THAT PREVENTS SEDIMENT FROM LEAVING THE SITE. ALL TEMPORARY SOIRL EROSION CONTROL MEASURES AND BMPS SHALL BE MAINTAINED UNTIL PERMANENT SOIL EROSION CONTROL MEASURES ARE IMPLEMENTED.

7.) ALL FACILITIES, VEGETATION AND OTHER ITEMS REQUIRED BY THE APPROVED FINAL GRADING, EROSION CONTROL AND RECLAMATION PLAN SHALL BE PROPERLY MAINTAINED BY THE OWNERS OF THE PROPERTY. SUCH MAINTENANCE SHALL INCLUDE, BUT NOT BE LIMITED TO KEEPING ALL EROSION CONTROL FACILITIES IN GOOD ORDER AND FUNCTIONAL, REPAIRING ANY EROSION DAMAGE THAT OCCURS, KEEPING ALL VEGETATION HEALTHY AND IN GROWING CONDITION AND REPLACING ANY DEAD VEGETATION AS SOON AS PRACTICABLE.

8.) ALL SILT FENCES ARE TO BE REGULARLY INSPECTED AND REPAIRED AS NEEDED.

9.) THE CONTRACTOR SHALL PROVIDE VEHICLE TRACKING CONTROL FACILITIES FOR EACH ENTRANCE/EXIT TO THE SITE. THE CONTRACTOR SHALL SUBMIT A PLAN WHICH WILL ASSURE USAGE OF THIS FACILITY BY ALL VEHICLES LEAVING THE SITE.

10.) EROSION CONTROL MEASURES SHALL BE CHECKED AFTER EACH STORM EVENT AND REPAIRED WHEN NECESSARY.

11.) CONTRACTOR SHALL MAINTAIN ALL TEMPORARY EROSION CONTROL FACILITIES IN GOOD WORKING ORDER UNTIL SUCH TIME AS PERMANENT FACILITIES ARE IN PLACE AND THE CONSTRUCTION MANAGER HAS APPROVED THEIR REMOVAL.

12.) ADDITIONAL EROSION CONTROL STRUCTURES MAY BE REQUIRED AT THE TIME OF CONSTRUCTION.

13.) THE EROSION CONTROL MEASURES OUTLINED ON THE PLAN ARE THE RESPONSIBILITY OF THE DEVELOPER TO MONITOR AND REPLACE, REGRADE AND REBUILD AS NECESSARY UNTIL VEGETATION IS ESTABLISHED.

14.) MAXIMUM ACREAGE OPEN AT ANY GIVEN TIME IS TO BE 30 ACRES.

SEEDING GUIDELINES:

1. SEEDBED PREPARATION

THE SEEDBED SHOULD BE WELL-SETTLED AND FIRM, BUT FRIABLE ENOUGH THAT THE SEED CAN BE PLACED AT THE SPECIFIED DEPTHS. COMPETITIVE STANDS OF WEEDS THAT ARE PRESENT BEFORE SEEDING MUST BE CONTROLLED BY SHALLOW TILLAGE OR BY APPLICATION OF HERBICIDES. SOILS THAT HAVE BEEN OVER-COMPACTED BY TRAFFIC OR EQUIPMENT, ESPECIALLY WHEN WET, SHOULD BE TILLED TO BREAK UP ROOTING-RESTRICTIVE LAYERS, THAN HARROWED, ROLLED, OR PACKED TO PREPARE THE REQUIRED FIRM SEEDBED.

2. FERTILIZER

FERTILIZER SHOULD BE APPLIED AT A RATE OF 50 POUNDS OF AVAIL-ABLE NITROGEN PER ACRE AND 40 POUNDS OF AVAILABLE PHOSPHATE PER ACRE. THE TIME OF APPLICATION SHOULD BE IMMEDIATELY PRIOR TO SEEDING, AT THE TIME OF SEEDING, OR IMMEDIATELY FOL-LOWING SEEDING, DEPENDING ON THE KIND OF FERTILIZER AND TYPE OF EQUIPMENT USED.

3. SEEDING

SEED SHOULD BE PLANTED WITH A GRASS DRILL ON ALL SLOPES OF 33% (3:1) OR FLATTER. SEED MAY BE BROADCAST BY HAND, BY MECHANICAL SPREADER, OR BY HYDRAULIC EQUIPMENT ON AREAS THAT ARE SMALL, TOO STEEP, OR NOT ACCESSIBLE FOR SEED DRILL OPERATIONS. SEED PLANTED WITH A DRILL SHOULD BE COVERED WITH SOIL TO A DEPTH OF 1/4 TO 3/4 INCH. SEED PLANTED BY THE BROADCAST METHOD SHALL BE INCORPORATED INTO THE SOIL SURFACE, NOT TO EXCEED A DEPTH OF 3/4 INCH, BY RAKING, HARROWING, OR OTHER PROVEN METHOD. THE TIME OF SEEDING IS FROM OCTOBER 15TH - MAY 31ST. SEED PLANTED IN THE LATE FALL WILL REMAIN DORMANT UNTIL SPRING, WHEN IT WILL GERMINATE.

4. MULCHING

SEEDED AREAS SHOULD BE MULCHED TO CONSERVE MOISTURE; PREVENT SURFACE COMPACTION OR CRUSTING; REDUCE RUNOFF AND EROSION; CONTROL INSECTS; AND HELP ESTABLISH PLANT COVER.

NATIVE HAY OR STRAW SHOULD BE APPLIED AT A RATE OF 4,000 POUNDS PER ACRE AND CRIMPED INTO THE GROUND. ON SLOPES GREATER THAN 3:1, AN AGRONOMY BLANKET SHOULD BE USED.

5. SUPPLEMENTAL WATER

IN LOW RAINFALL AREAS, WHERE WATER IS AVAILABLE AND WHERE RAPID ESTABLISHMENT IS NEEDED, IRRIGATION OF NEW SEEDING SHOULD BE PERFORMED DURING THE FIRST GROWING SEASON. WATER SHOULD BE APPLIED AT APPROXIMATELY ONE WEEK INTERVALS, AT A RATE OF 3/4 TO 1 INCH PER APPLICATION, WHEN RAINFALL IS DEFI-CIENT FOR PLANT DEVELOPMENT.

NOTES:

AT LEAST TEN DAYS PRIOR TO THE ANTICIPATED START OF CONSTRUCTION, FOR PROJECTS THAT WILL DISTURB 1 ACRE OR MORE, THE OWNER OR OPERATOR OF THE CONSTRUCTION ACTIVITY SHALL SUBMIT A PERMIT APPLICATION FOR STORMWATER DISCHARGE TO THE COLORADO DEPARTMENT OF PUBLIC HEALTH AND ENVIRONMENT, WATER QUALITY DIVISION. THE APPLICATION CONTAINS CERTIFICATION OF COMPLETION OF A STORMWATER MANAGEMENT PLAN (SWMP), OF WHICH THIS GRADING AND EROSION CONTROL PLAN MAY BE A PART. FOR INFORMATION OR APPLICATION MATERIALS CONTACT:

COLORADO DEPARTMENT OF PUBLIC HEALTH AND ENVIRONMENT
WATER QUALITY CONTROL DIVISION
WQCD - PERMITS
4300 CHERRY CREEK DRIVE SOUTH
DENVER, CO 80246-1530
ATTN: PERMITS UNIT

A PORTION OF THE OVERALL FOREST LAKES DEVELOPMENT IS LOCATED WITHIN A FLOODPLAIN AS DETERMINED BY THE FLOOD INSURANCE RATE MAPS (F.I.R.M.) MAP NUMBERS 08041 C0267G, C0266G, C0258G & C0259G EFFECTIVE DATE, DECEMBER 7, 2018. HOWEVER, THERE IS NO PORTION OF FILING 7 DEVELOPMENT WITHIN THE FLOODPLAIN LIMITS.

THE AVERAGE SOIL CONDITION REFLECTS HYDROLOGIC SOIL GROUP "B", MOSTLY JARRE-TECOLOTE COMPLEX AND PEYTON-PRING COMPLEX AS DETERMINED BY THE "SOIL SURVEY OF EL PASO COUNTY AREA" PREPARED BY THE U.S. SOIL CONSERVATION SERVICE.

EXISTING VEGETATION CONSISTS OF NATIVE GRASSES.

EMERGENCY OVERFLOW SWALES FOR INLETS IN THE INTERIM UNTIL CURB AND ASPHALT IS INSTALLED WILL BE THE LOTS, FINAL WILL BE TO OVERTOP THE HIGH POINT IN ROADWAY TO THE NEXT AVAILABLE INLET OR TO PROPOSED POND.

STOCKPILE LOCATIONS FOR HOMEBUILDING TO BE ON EACH INDIVIDUAL LOT THAT IS BEING BUILT UPON.

LIMITS OF DISTURBANCE FOR THIS PLAN INCLUDE UTILITY INSTALLATION AND ROADWAY CONSTRUCTION WITHIN THE R.O.W., AND OVERLOT GRADING FOR DEVELOPMENT THEN INDIVIDUAL LOTS FOR HOMEBUILDING ONCE CONSTRUCTION OF THE HOME BEGINS.

GRADING WITHIN THIS PHASE WILL BE FULLY DEVELOPED WITH HOME BUILDING OPERATIONS.

LOCATION OF THE CONCRETE WASHOUT, STORAGE FOR MAINTENANCE EQUIPMENT AND TEMPORARY DISPOSAL AREAS WILL BE ADDED TO THIS PLAN BY SWMP ADMINISTRATOR UPON COORDINATION WITH SELECTED CONTRACTOR.

ALL AREAS ARE TO BE RESEEDED OUTSIDE OF THE FILING NO. 1 AREA. RESEED ALL AREAS AS NEEDED TO PREVENT EROSION AND SEDIMENT RUNOFF ONTO CONSTRUCTION ACTIVITIES.

SCHEDULE OF ANTICIPATED CONSTRUCTION ACTIVITY:

1. INSTALL INITIAL BMP'S
2. INSPECTION OF INTIAL BMP'S BY COUNTY STAFF
3. PRECONSTRUCTION MEETING WITH COUNTY STAFF

BEGIN CONSTRUCTION	ACTIVITY	COMPLETION	EROSION CONTROL
UPON APPROVAL	ALL SITE ROADWAY GRADING AND UTILITY INSTALLATION	6 MONTHS	ALL SHOWN ON GRADING PLAN

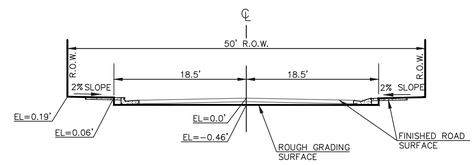

50' R.O.W. TYPICAL STREET SECTION
HOLD-DOWN OVERLOT GRADING IN ROADWAYS
SCALE 1" = 10'

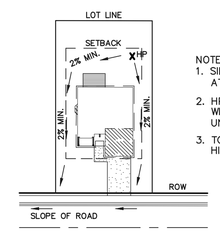

NOTES:
1. SIDEYARD SWALES TO BE CONST. AT 2% MIN. SLOPE.
2. HP LOCATION ON INDIVIDUAL LOTS WILL VARY DEPENDING UPON EXACT UNIT SIZE AND LOCATION.
3. TOF ELEV. MUST BE MIN. 18" HIGHER THAN ESTABLISHED HP.

TYPICAL "A" LOT DRAINAGE PATTERN
N.T.S.

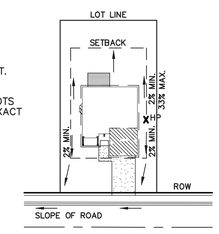

TYPICAL "B", "G," "W/O" LOT DRAINAGE PATTERN
N.T.S.

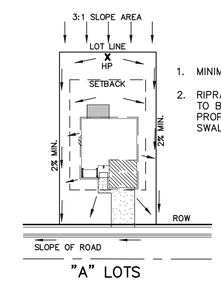

1. MINIMUM LOT WIDTH ALONG SLOPE IS 70'.
2. RIPRAP OR CONCRETE 'V' NOTCH SWALES TO BE INSTALLED ALONG SHARED PROPERTY & WITHIN SIDE LOT EASEMENTS. SWALES TO DISCHARGE ONTO ROADWAY.

"A" LOTS W/SLOPE BEHIND DRAINAGE PATTERN
N.T.S.

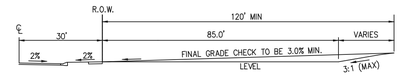

TYPICAL A LOT
NOT TO SCALE

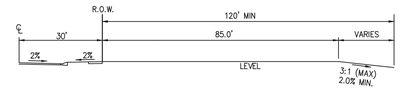

TYPICAL B LOT
NOT TO SCALE

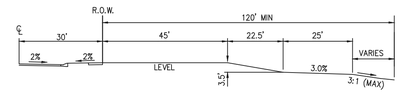

TYPICAL GARDEN (G) LOT
NOT TO SCALE

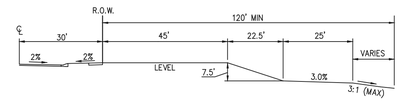

TYPICAL WALKOUT (W/O) LOT
NOT TO SCALE

NOTE:
"1" LOTS OR "TRANSITION" LOTS OCCUR IN PLACES WHERE BOTH PROPERTY LINES CANNOT BE GRADED AS THE TYPICAL STANDARD LOT TEMPLATES SHOWN. THESE LOTS WILL STILL BE GRADED TO CREATE POSITIVE DRAINAGE AWAY FROM THE STRUCTURE.

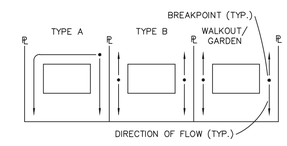

NOTE:
SIDE LOT LINE SWALES ARE REQUIRED FOR ALL LOTS.

LOT DRAINAGE TYPES

PCD FILE # SF2237

48 HOURS BEFORE YOU DIG, CALL UTILITY LOCATORS
811
UTILITY NOTIFICATION CENTER OF COLORADO
IT'S THE LAW

THE LOCATIONS OF EXISTING UNDERGROUND UTILITIES ARE SHOWN IN AN APPROXIMATE WAY ONLY. THE CONTRACTOR SHALL DETERMINE THE EXACT LOCATION OF ALL EXISTING UTILITIES BEFORE COMMENCING WORK. THE CONTRACTOR SHALL BE FULLY RESPONSIBLE FOR ANY AND ALL DAMAGES WHICH MIGHT BE CAUSED BY HIS FAILURE TO EXACTLY LOCATE AND PRESERVE ANY AND ALL UNDERGROUND UTILITIES.

NO.	REVISION	DATE

REVIEW:
PREPARED UNDER MY DIRECT SUPERVISION FOR AND ON BEHALF OF CLASSIC CONSULTING ENGINEERS AND SURVEYORS, LLC

COLORADO LICENSED KYLE RAYE CAMPBELL 29794 PROFESSIONAL ENGINEER

KYLE R. CAMPBELL, P.E. #29794 — 8-8-24 DATE

CLASSIC CONSULTING
619 N. Cascade Avenue, Suite 200 (719)785-0790
Colorado Springs, Colorado 80903 (719)785-0799(Fax)

STERLING RANCH EAST FILING NO. 2
CONSTRUCTION PLANS
GRADING AND EROSION CONTROL PLAN
NOTES & DETAIL SHEET

DESIGNED BY	JDP	SCALE		DATE	11/13/23
DRAWN BY	JDP	(H) 1"= N/A		SHEET 5	OF 15
CHECKED BY	KRC	(V) 1"= N/A		JOB NO.	1183.31

EPC 9/23/2024

Concrete Washout Area (CWA) — MM-1

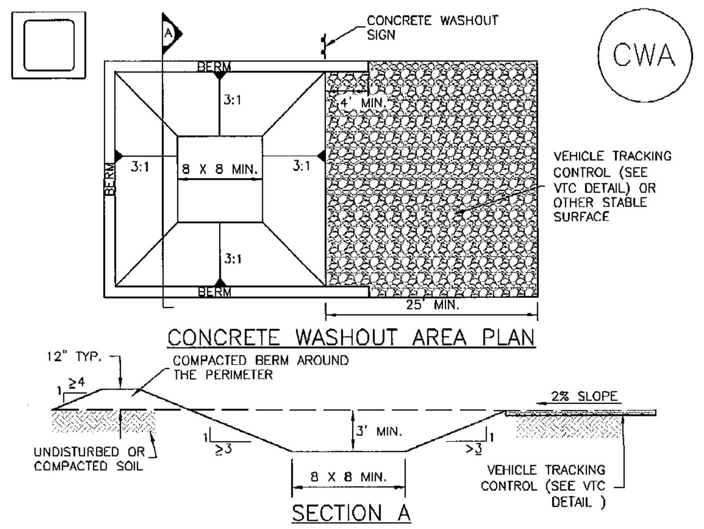

CWA–1. CONCRETE WASHOUT AREA

CWA INSTALLATION NOTES

1. SEE PLAN VIEW FOR:
   –CWA INSTALLATION LOCATION.

2. DO NOT LOCATE AN UNLINED CWA WITHIN 400' OF ANY NATURAL DRAINAGE PATHWAY OR WATERBODY. DO NOT LOCATE WITHIN 1,000' OF ANY WELLS OR DRINKING WATER SOURCES. IF SITE CONSTRAINTS MAKE THIS INFEASIBLE, OR IF HIGHLY PERMEABLE SOILS EXIST ON SITE, THE CWA MUST BE INSTALLED WITH AN IMPERMEABLE LINER (16 MIL MIN. THICKNESS) OR SURFACE STORAGE ALTERNATIVES USING PREFABRICATED CONCRETE WASHOUT DEVICES OR A LINED ABOVE GROUND STORAGE ARE SHOULD BE USED.

3. THE CWA SHALL BE INSTALLED PRIOR TO CONCRETE PLACEMENT ON SITE.

4. CWA SHALL INCLUDE A FLAT SUBSURFACE PIT THAT IS AT LEAST 8' BY 8' SLOPES LEADING OUT OF THE SUBSURFACE PIT SHALL BE 3:1 OR FLATTER. THE PIT SHALL BE AT LEAST 3' DEEP.

5. BERM SURROUNDING SIDES AND BACK OF THE CWA SHALL HAVE MINIMUM HEIGHT OF 1'.

6. VEHICLE TRACKING PAD SHALL BE SLOPED 2% TOWARDS THE CWA.

7. SIGNS SHALL BE PLACED AT THE CONSTRUCTION ENTRANCE, AT THE CWA, AND ELSEWHERE AS NECESSARY TO CLEARLY INDICATE THE LOCATION OF THE CWA TO OPERATORS OF CONCRETE TRUCKS AND PUMP RIGS.

8. USE EXCAVATED MATERIAL FOR PERIMETER BERM CONSTRUCTION.

MM-1 — Concrete Washout Area (CWA)

CWA MAINTENANCE NOTES

1. INSPECT BMPs EACH WORKDAY, AND MAINTAIN THEM IN EFFECTIVE OPERATING CONDITION. MAINTENANCE OF BMPs SHOULD BE PROACTIVE, NOT REACTIVE. INSPECT BMPs AS SOON AS POSSIBLE (AND ALWAYS WITHIN 24 HOURS) FOLLOWING A STORM THAT CAUSES SURFACE EROSION, AND PERFORM NECESSARY MAINTENANCE.

2. FREQUENT OBSERVATIONS AND MAINTENANCE ARE NECESSARY TO MAINTAIN BMPs IN EFFECTIVE OPERATING CONDITION. INSPECTIONS AND CORRECTIVE MEASURES SHOULD BE DOCUMENTED THOROUGHLY.

3. WHERE BMPs HAVE FAILED, REPAIR OR REPLACEMENT SHOULD BE INITIATED UPON DISCOVERY OF THE FAILURE.

4. THE CWA SHALL BE REPAIRED, CLEANED, OR ENLARGED AS NECESSARY TO MAINTAIN CAPACITY FOR CONCRETE WASTE. CONCRETE MATERIALS, ACCUMULATED IN PIT, SHALL BE REMOVED ONCE THE MATERIALS HAVE REACHED A DEPTH OF 2'.

5. CONCRETE WASHOUT WATER, WASTED PIECES OF CONCRETE AND ALL OTHER DEBRIS IN THE SUBSURFACE PIT SHALL BE TRANSPORTED FROM THE JOB SITE IN A WATER-TIGHT CONTAINER AND DISPOSED OF PROPERLY.

6. THE CWA SHALL REMAIN IN PLACE UNTIL ALL CONCRETE FOR THE PROJECT IS PLACED.

7. WHEN THE CWA IS REMOVED, COVER THE DISTURBED AREA WITH TOP SOIL, SEED AND MULCH OR OTHERWISE STABILIZED IN A MANNER APPROVED BY THE LOCAL JURISDICTION.

(DETAIL ADAPTED FROM DOUGLAS COUNTY, COLORADO AND THE CITY OF PARKER, COLORADO, NOT AVAILABLE IN AUTOCAD).

NOTE: MANY JURISDICTIONS HAVE BMP DETAILS THAT VARY FROM UDFCD STANDARD DETAILS. CONSULT WITH LOCAL JURISDICTIONS AS TO WHICH DETAIL SHOULD BE USED WHEN DIFFERENCES ARE NOTED.

Earth Dikes and Drainage Swales (ED/DS) — EC-10

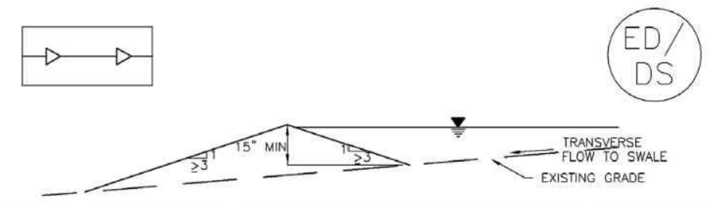

ED–1. COMPACTED UNLINED EARTH DIKE FORMED BY BERM

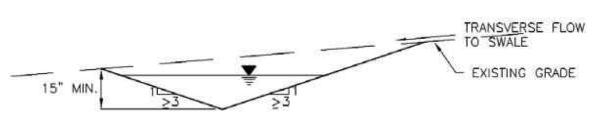

DS–1. COMPACTED UNLINED EXCAVATED SWALE

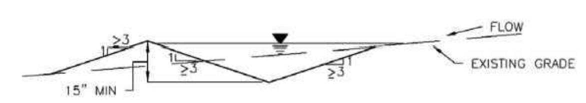

DS–2. COMPACTED UNLINED SWALE FORMED BY CUT AND FILL

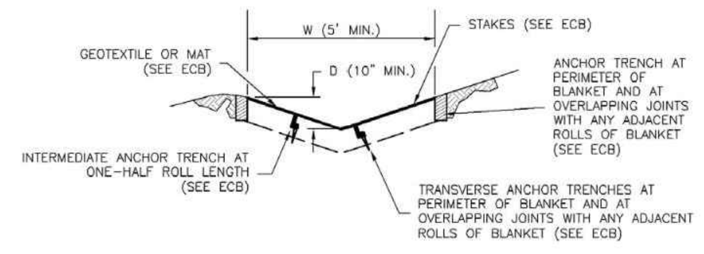

DS–3. ECB LINED SWALE (CUT AND FILL OR BERM)

EC-10 — Earth Dikes and Drainage Swales (ED/DS)

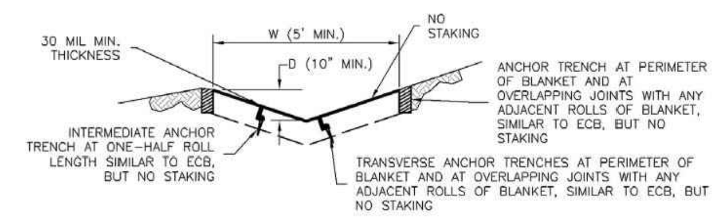

DS–4. SYNTHETIC LINED SWALE

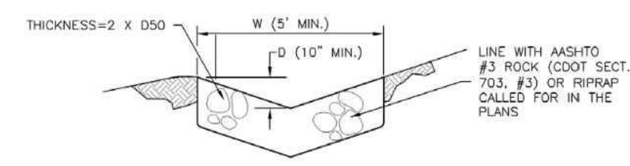

DS–5. RIPRAP LINED SWALE

EARTH DIKE AND DRAINAGE SWALE INSTALLATION NOTES

1. SEE SITE PLAN FOR:
   – LOCATION OF DIVERSION SWALE
   – TYPE OF SWALE (UNLINED, COMPACTED AND/OR LINED).
   – LENGTH OF EACH SWALE.
   – DEPTH, D, AND WIDTH, W DIMENSIONS.
   – FOR ECB/TRM LINED DITCH, SEE ECB DETAIL.
   – FOR RIPRAP LINED DITCH, SIZE OF RIPRAP, D50.

2. SEE DRAINAGE PLANS FOR DETAILS OF PERMANENT CONVEYANCE FACILITIES AND/OR DIVERSION SWALES EXCEEDING 2-YEAR FLOW RATE OR 10 CFS.

3. EARTH DIKES AND SWALES INDICATED ON SWMP PLAN SHALL BE INSTALLED PRIOR TO LAND-DISTURBING ACTIVITIES IN PROXIMITY.

4. EMBANKMENT IS TO BE COMPACTED TO 90% OF MAXIMUM DENSITY AND WITHIN 2% OF OPTIMUM MOISTURE CONTENT ACCORDING TO ASTM D698.

5. SWALES ARE TO DRAIN TO A SEDIMENT CONTROL BMP.

6. FOR LINED DITCHES, INSTALLATION OF ECB/TRM SHALL CONFORM TO THE REQUIREMENTS OF THE ECB DETAIL.

7. WHEN CONSTRUCTION TRAFFIC MUST CROSS A DIVERSION SWALE, INSTALL A TEMPORARY CULVERT WITH A MINIMUM DIAMETER OF 12 INCHES.

Earth Dikes and Drainage Swales (ED/DS) — EC-10

EARTH DIKE AND DRAINAGE SWALE MAINTENANCE NOTES

1. INSPECT BMPs EACH WORKDAY, AND MAINTAIN THEM IN EFFECTIVE OPERATING CONDITION. MAINTENANCE OF BMPs SHOULD BE PROACTIVE, NOT REACTIVE. INSPECT BMPs AS SOON AS POSSIBLE (AND ALWAYS WITHIN 24 HOURS) FOLLOWING A STORM THAT CAUSES SURFACE EROSION, AND PERFORM NECESSARY MAINTENANCE.

2. FREQUENT OBSERVATIONS AND MAINTENANCE ARE NECESSARY TO MAINTAIN BMPs IN EFFECTIVE OPERATING CONDITION. INSPECTIONS AND CORRECTIVE MEASURES SHOULD BE DOCUMENTED THOROUGHLY.

3. WHERE BMPs HAVE FAILED, REPAIR OR REPLACEMENT SHOULD BE INITIATED UPON DISCOVERY OF THE FAILURE.

4. SWALES SHALL REMAIN IN PLACE UNTIL THE END OF CONSTRUCTION; IF APPROVED BY LOCAL JURISDICTION, SWALES MAY BE LEFT IN PLACE.

5. WHEN A SWALE IS REMOVED, THE DISTURBED AREA SHALL BE COVERED WITH TOPSOIL, SEEDED AND MULCHED OR OTHERWISE STABILIZED IN A MANNER APPROVED BY LOCAL JURISDICTION.

(DETAIL ADAPTED FROM DOUGLAS COUNTY, COLORADO AND THE CITY OF COLORADO SPRINGS, COLORADO, NOT AVAILABLE IN AUTOCAD)

NOTE: MANY JURISDICTIONS HAVE BMP DETAILS THAT VARY FROM UDFCD STANDARD DETAILS. CONSULT WITH LOCAL JURISDICTIONS AS TO WHICH DETAIL SHOULD BE USED WHEN DIFFERENCES ARE NOTED.

SC-6 — Inlet Protection (IP)

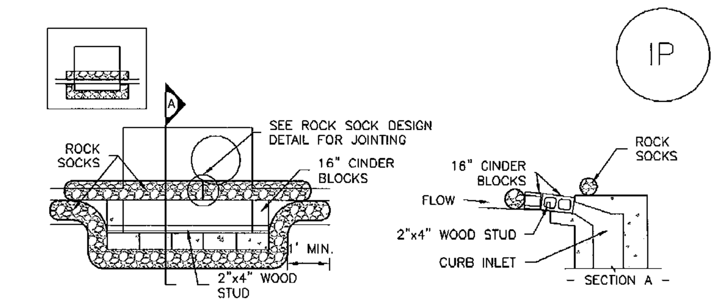

IP–1. BLOCK AND ROCK SOCK SUMP OR ON GRADE INLET PROTECTION

BLOCK AND CURB SOCK INLET PROTECTION INSTALLATION NOTES

1. SEE ROCK SOCK DESIGN DETAIL FOR INSTALLATION REQUIREMENTS.

2. CONCRETE "CINDER" BLOCKS SHALL BE LAID ON THEIR SIDES AROUND THE INLET IN A SINGLE ROW, ABUTTING ONE ANOTHER WITH THE OPEN END FACING AWAY FROM THE CURB.

3. GRAVEL BAGS SHALL BE PLACED AROUND CONCRETE BLOCKS, CLOSELY ABUTTING ONE ANOTHER AND JOINTED TOGETHER IN ACCORDANCE WITH ROCK SOCK DESIGN DETAIL.

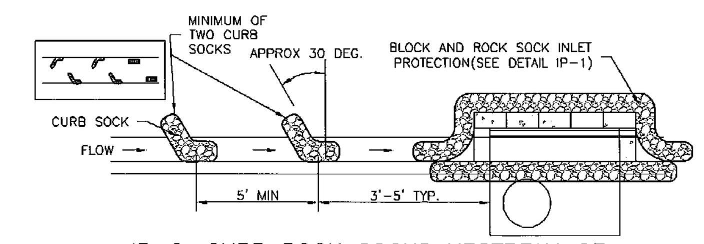

IP–2. CURB ROCK SOCKS UPSTREAM OF INLET PROTECTION

CURB ROCK SOCK INLET PROTECTION INSTALLATION NOTES

1. SEE ROCK SOCK DESIGN DETAIL INSTALLATION REQUIREMENTS.

2. PLACEMENT OF THE SOCK SHALL BE APPROXIMATELY 30 DEGREES FROM PERPENDICULAR IN THE OPPOSITE DIRECTION OF FLOW.

3. SOCKS ARE TO BE FLUSH WITH THE CURB AND SPACED A MINIMUM OF 5 FEET APART.

4. AT LEAST TWO CURB SOCKS IN SERIES ARE REQUIRED UPSTREAM OF ON-GRADE INLETS.

Inlet Protection (IP) — SC-6

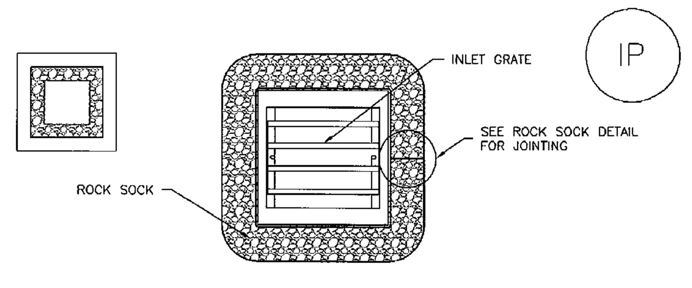

IP–3. ROCK SOCK SUMP/AREA INLET PROTECTION

ROCK SOCK SUMP/AREA INLET PROTECTION INSTALLATION NOTES

1. SEE ROCK SOCK DESIGN DETAIL FOR INSTALLATION REQUIREMENTS.

2. STRAW WATTLES/SEDIMENT CONTROL LOGS MAY BE USED IN PLACE OF ROCK SOCKS FOR INLETS IN PERVIOUS AREAS. INSTALL PER SEDIMENT CONTROL LOG DETAIL.

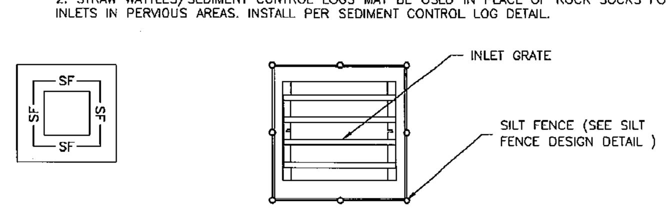

IP–4. SILT FENCE FOR SUMP INLET PROTECTION

SILT FENCE INLET PROTECTION INSTALLATION NOTES

1. SEE SILT FENCE DESIGN DETAIL FOR INSTALLATION REQUIREMENTS.

2. POSTS SHALL BE PLACED AT EACH CORNER OF THE INLET AND AROUND THE EDGES AT A MAXIMUM SPACING OF 3 FEET.

3. STRAW WATTLES/SEDIMENT CONTROL LOGS MAY BE USED IN PLACE OF SILT FENCE FOR INLETS IN PERVIOUS AREAS. INSTALL PER SEDIMENT CONTROL LOG DETAIL.

EC-6 — Rolled Erosion Control Products (RECP)

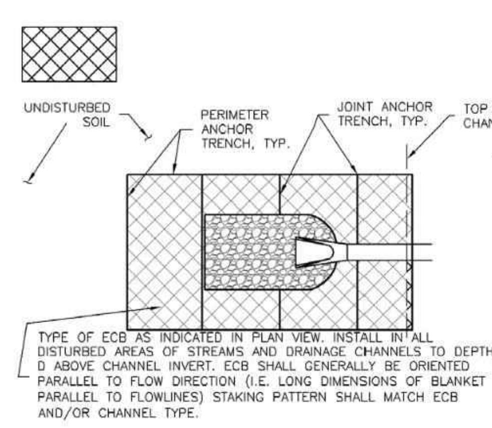

ECB–1. PIPE OUTLET TO DRAINAGEWAY

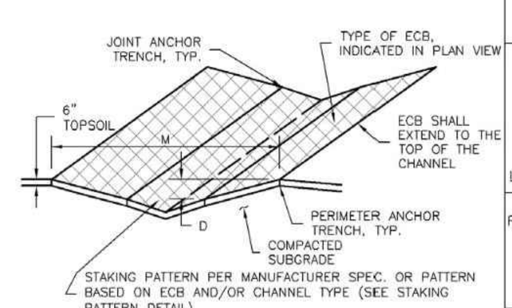

ECB–2. SMALL DITCH OR DRAINAGEWAY

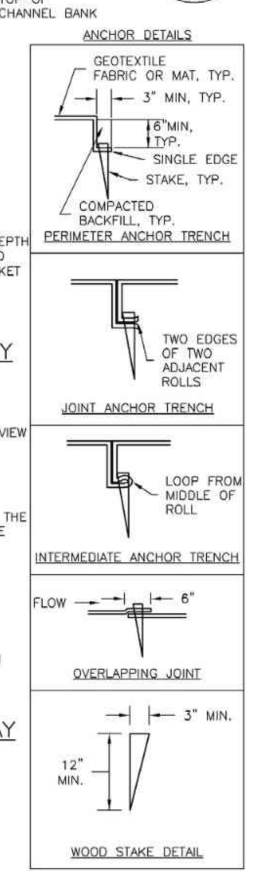

Rolled Erosion Control Products (RECP) — EC-6

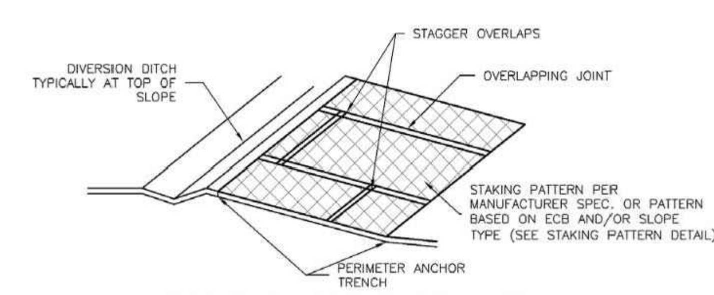

ECB–3. OUTSIDE OF DRAINAGEWAY

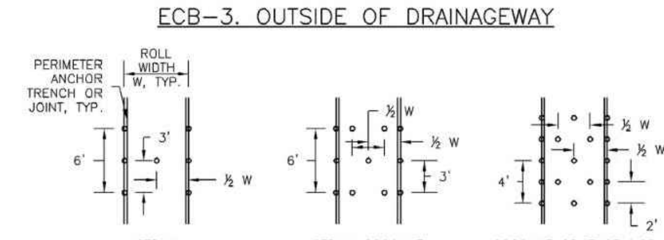

STAKING PATTERNS BY ECB TYPE

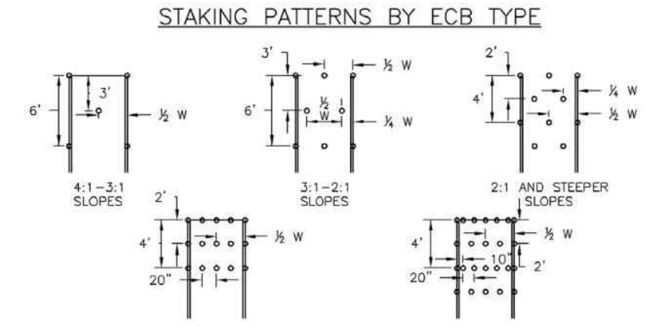

STAKING PATTERNS BY SLOPE OR CHANNEL TYPE

EC-6 — Rolled Erosion Control Products (RECP)

EROSION CONTROL BLANKET INSTALLATION NOTES

1. SEE PLAN VIEW FOR:
   –LOCATION OF ECB.
   –TYPE OF ECB (STRAW, STRAW–COCONUT, COCONUT, OR EXCELSIOR).
   –AREA, A, IN SQUARE YARDS OF EACH TYPE OF ECB.

2. 100% NATURAL AND BIODEGRADABLE MATERIALS ARE PREFERRED FOR RECPs, ALTHOUGH SOME JURISDICTIONS MAY ALLOW OTHER MATERIALS IN SOME APPLICATIONS.

3. IN AREAS WHERE ECBs ARE SHOWN ON THE PLANS, THE PERMITTEE SHALL PLACE TOPSOIL AND PERFORM FINAL GRADING, SURFACE PREPARATION, AND SEEDING AND MULCHING. SUBGRADE SHALL BE SMOOTH AND MOIST PRIOR TO ECB INSTALLATION AND THE ECB SHALL BE IN FULL CONTACT WITH SUBGRADE. NO GAPS OR VOIDS SHALL EXIST UNDER THE BLANKET.

4. PERIMETER ANCHOR TRENCH SHALL BE USED ALONG THE OUTSIDE PERIMETER OF ALL BLANKET AREAS.

5. JOINT ANCHOR TRENCH SHALL BE USED TO JOIN ROLLS OF ECBs TOGETHER (LONGITUDINALLY AND TRANSVERSELY) FOR ALL ECBs EXCEPT STRAW WHICH MAY USE AN OVERLAPPING JOINT.

6. INTERMEDIATE ANCHOR TRENCH SHALL BE USED AT SPACING OF ONE-HALF ROLL LENGTH FOR COCONUT AND EXCELSIOR ECBs.

7. OVERLAPPING JOINT DETAIL SHALL BE USED TO JOIN ROLLS OF ECBs TOGETHER FOR ECBs ON SLOPES.

8. MATERIAL SPECIFICATIONS OF ECBs SHALL CONFORM TO TABLE ECB-1.

9. ANY AREAS OF SEEDING AND MULCHING DISTURBED IN THE PROCESS OF INSTALLING ECBS SHALL BE RESEEDED AND MULCHED.

10. DETAILS ON DESIGN PLANS FOR MAJOR DRAINAGEWAY STABILIZATION WILL GOVERN IF DIFFERENT FROM THOSE SHOWN HERE.

TABLE ECB-1. ECB MATERIAL SPECIFICATIONS

TYPE	COCONUT CONTENT	STRAW CONTENT	EXCELSIOR CONTENT	RECOMMENDED NETTING**
STRAW*	–	100%	–	DOUBLE/ NATURAL
STRAW–COCONUT	30% MIN	70% MAX	–	DOUBLE/ NATURAL
COCONUT	100%	–	–	DOUBLE/ NATURAL
EXCELSIOR	–	–	100%	DOUBLE/ NATURAL

*STRAW ECBs MAY ONLY BE USED OUTSIDE OF STREAMS AND DRAINAGE CHANNEL.
**ALTERNATE NETTING MAY BE ACCEPTABLE IN SOME JURISDICTIONS

Rolled Erosion Control Products (RECP) — EC-6

EROSION CONTROL BLANKET MAINTENANCE NOTES

1. INSPECT BMPs EACH WORKDAY, AND MAINTAIN THEM IN EFFECTIVE OPERATING CONDITION. MAINTENANCE OF BMPs SHOULD BE PROACTIVE, NOT REACTIVE. INSPECT BMPs AS SOON AS POSSIBLE (AND ALWAYS WITHIN 24 HOURS) FOLLOWING A STORM THAT CAUSES SURFACE EROSION, AND PERFORM NECESSARY MAINTENANCE.

2. FREQUENT OBSERVATIONS AND MAINTENANCE ARE NECESSARY TO MAINTAIN BMPs IN EFFECTIVE OPERATING CONDITION. INSPECTIONS AND CORRECTIVE MEASURES SHOULD BE DOCUMENTED THOROUGHLY.

3. WHERE BMPs HAVE FAILED, REPAIR OR REPLACEMENT SHOULD BE INITIATED UPON DISCOVERY OF THE FAILURE.

4. ECBs SHALL BE LEFT IN PLACE TO EVENTUALLY BIODEGRADE, UNLESS REQUESTED TO BE REMOVED BY THE LOCAL JURISDICTION.

5. ANY ECB PULLED OUT, TORN, OR OTHERWISE DAMAGED SHALL BE REPAIRED OR REINSTALLED. ANY SUBGRADE AREAS BELOW THE GEOTEXTILE THAT HAVE ERODED TO CREATED A VOID UNDER THE BLANKET, OR THAT REMAIN DEVOID OF GRASS SHALL BE REPAIRED, RESEEDED AND MULCHED AND THE ECB REINSTALLED.

NOTE: MANY JURISDICTIONS HAVE BMP DETAILS THAT VARY FROM UDFCD STANDARD DETAILS. CONSULT WITH LOCAL JURISDICTIONS AS TO WHICH DETAIL SHOULD BE USED WHEN DIFFERENCES ARE NOTED.

(DETAILS ADAPTED FROM DOUGLAS COUNTY, COLORADO AND TOWN OF PARKER COLORADO, NOT AVAILABLE IN AUTOCAD)

PCD FILE # SF2237

48 HOURS BEFORE YOU DIG,
CALL UTILITY LOCATORS
811
UTILITY NOTIFICATION CENTER OF COLORADO
IT'S THE LAW

THE LOCATIONS OF EXISTING UNDERGROUND UTILITIES ARE SHOWN IN AN APPROXIMATE WAY ONLY. THE CONTRACTOR SHALL DETERMINE THE EXACT LOCATION OF ALL EXISTING UTILITIES BEFORE COMMENCING WORK. THE CONTRACTOR SHALL BE FULLY RESPONSIBLE FOR ANY AND ALL DAMAGES WHICH MIGHT BE CAUSED BY HIS FAILURE TO EXACTLY LOCATE AND PRESERVE ANY AND ALL UNDERGROUND UTILITIES.

NO.	REVISION	DATE

REVIEW:

PREPARED UNDER MY DIRECT SUPERVISION FOR AND ON BEHALF OF CLASSIC CONSULTING ENGINEERS AND SURVEYORS, LLC

KYLE R. CAMPBELL, COLORADO P.E. #29794 — 8-9-24 DATE

CLASSIC CONSULTING
619 N. Cascade Avenue, Suite 200, Colorado Springs, Colorado 80903 — (719)785-0790 — (719)785-0799(Fax)

STERLING RANCH EAST FILING NO. 2
CONSTRUCTION PLANS
GRADING AND EROSION CONTROL PLAN
DETAIL SHEET

DESIGNED BY	JDP	SCALE	DATE 11/13/23
DRAWN BY	JDP	(H) 1"= N/A	SHEET 6 OF 15
CHECKED BY	KRC	(V) 1"= N/A	JOB NO. 1183.31

EPC 9/23/2024

I:\118331\DRAWINGS\CONSTRUCTION\GEC\04-118331-DETAILS.DWG PRINTED BY: JPASSANISE 11.13.23 @ 8:49 AM LAST SAVED BY: JPASSANISE

Sediment Basin (SB) SC-7

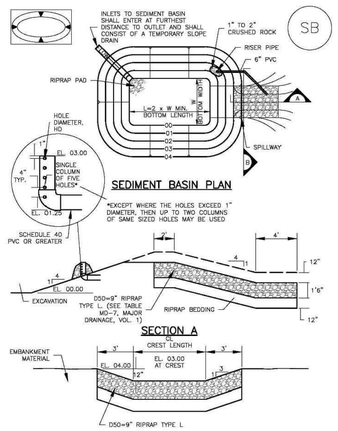

SC-7 Sediment Basin (SB)

TABLE SB-1. SIZING INFORMATION FOR STANDARD SEDIMENT BASIN

Upstream Drainage Area (rounded to nearest acre), (ac)	Basin Bottom Width (W), (ft)	Spillway Crest Length (CL), (ft)	Hole Diameter (HD), (in)
1	12 ½	2	9/16
2	21	3	11/16
3	28	5	¾
4	33 ½	6	13/16
5	38 ½	8	15/16
6	43	9	29/32
7	47 ½	11	29/32
8	51	12	31/32
9	55	13	⅞
10	58 ½	15	15/16
11	61	16	29/32
12	64	18	7/8
13	67 ½	19	1 7/64
14	70 ½	21	1 ⅛
15	73 ½	22	1 9/64

SEDIMENT BASIN INSTALLATION NOTES

1. SEE PLAN VIEW FOR:
   –LOCATION OF SEDIMENT BASIN.
   –TYPE OF BASIN (STANDARD BASIN OR NONSTANDARD BASIN).
   –FOR STANDARD BASIN, BOTTOM WIDTH W, CREST LENGTH CL, AND HOLE DIAMETER, HD.
   –FOR NONSTANDARD BASIN, SEE CONSTRUCTION DRAWINGS FOR DESIGN OF BASIN INCLUDING RISER HEIGHT H, NUMBER OF COLUMNS N, HOLE DIAMETER HD AND PIPE DIAMETER D.

2. FOR STANDARD BASIN, BOTTOM DIMENSION MAY BE MODIFIED AS LONG AS BOTTOM AREA IS NOT REDUCED.

3. SEDIMENT BASINS SHALL BE INSTALLED PRIOR TO ANY OTHER LAND–DISTURBING ACTIVITY THAT RELIES ON ON BASINS AS AS A STORMWATER CONTROL.

4. EMBANKMENT MATERIAL SHALL CONSIST OF SOIL FREE OF DEBRIS, ORGANIC MATERIAL, AND ROCKS OR CONCRETE GREATER THAN 3 INCHES AND SHALL HAVE A MINIMUM OF 15 PERCENT BY WEIGHT PASSING THE NO. 200 SIEVE.

5. EMBANKMENT MATERIAL SHALL BE COMPACTED TO AT LEAST 95 PERCENT OF MAXIMUM DENSITY IN ACCORDANCE WITH ASTM D698.

6. PIPE SCH 40 OR GREATER SHALL BE USED.

7. THE DETAILS SHOWN ON THESE SHEETS PERTAIN TO STANDARD SEDIMENT BASIN(S) FOR DRAINAGE AREAS LESS THAN 15 ACRES. SEE CONSTRUCTION DRAWINGS FOR EMBANKMENT, STORAGE VOLUME, SPILLWAY, OUTLET, AND OUTLET PROTECTION DETAILS FOR ANY SEDIMENT BASIN(S) THAT HAVE BEEN INDIVIDUALLY DESIGNED FOR DRAINAGE AREAS LARGER THAN 15 ACRES.

Sediment Basin (SB) SC-7

SEDIMENT BASIN MAINTENANCE NOTES

1. INSPECT BMPs EACH WORKDAY, AND MAINTAIN THEM IN EFFECTIVE OPERATING CONDITION. MAINTENANCE OF BMPs SHOULD BE PROACTIVE, NOT REACTIVE. INSPECT BMPs AS SOON AS POSSIBLE (AND ALWAYS WITHIN 24 HOURS) FOLLOWING A STORM THAT CAUSES SURFACE EROSION, AND PERFORM NECESSARY MAINTENANCE.

2. FREQUENT OBSERVATIONS AND MAINTENANCE ARE NECESSARY TO MAINTAIN BMPs IN EFFECTIVE OPERATING CONDITION. INSPECTIONS AND CORRECTIVE MEASURES SHOULD BE DOCUMENTED THOROUGHLY.

3. WHERE BMPs HAVE FAILED, REPAIR OR REPLACEMENT SHOULD BE INITIATED UPON DISCOVERY OF THE FAILURE.

4. SEDIMENT ACCUMULATED IN BASIN SHALL BE REMOVED AS NEEDED TO MAINTAIN BMP EFFECTIVENESS. TYPICALLY WHEN SEDIMENT DEPTH REACHES ONE FOOT (I.E., TWO FEET BELOW THE SPILLWAY CREST).

5. SEDIMENT BASINS ARE TO REMAIN IN PLACE UNTIL THE UPSTREAM DISTURBED AREA IS STABILIZED AND GRASS COVER IS ACCEPTED BY THE LOCAL JURISDICTION.

6. WHEN SEDIMENT BASINS ARE REMOVED, ALL DISTURBED AREAS SHALL BE COVERED WITH TOPSOIL, SEEDED AND MULCHED OR OTHERWISE STABILIZED AS APPROVED BY LOCAL JURISDICTION.

(DETAILS ADAPTED FROM DOUGLAS COUNTY, COLORADO)

NOTE: MANY JURISDICTIONS HAVE BMP DETAILS THAT VARY FROM UDFCD STANDARD DETAILS. CONSULT WITH LOCAL JURISDICTIONS AS TO WHICH DETAIL SHOULD BE USED WHEN DIFFERENCES ARE NOTED.

SC-3 Straw Bale Barrier (SBB)

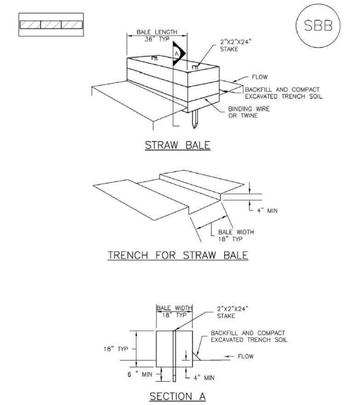

SBB–1. STRAW BALE

Straw Bale Barrier (SBB) SC-3

STRAW BALE INSTALLATION NOTES

1. SEE PLAN VIEW FOR:
   –LOCATION(S) OF STRAW BALES.

2. STRAW BALES SHALL CONSIST OF CERTIFIED WEED FREE STRAW OR HAY. LOCAL JURISDICTIONS MAY REQUIRE PROOF THAT BALES ARE WEED FREE.

3. STRAW BALES SHALL CONSIST OF APPROXIMATELY 5 CUBIC FEET OF STRAW OR HAY AND WEIGH NOT LESS THAN 35 POUNDS.

4. WHEN STRAW BALES ARE USED IN SERIES AS A BARRIER, THE END OF EACH BALE SHALL BE TIGHTLY ABUTTING ONE ANOTHER.

5. STRAW BALE DIMENSIONS SHALL BE APPROXIMATELY 36"X18"X18".

6. A UNIFORM ANCHOR TRENCH SHALL BE EXCAVATED TO A DEPTH OF 4", STRAW BALES SHALL BE PLACED SO THAT BINDING TWINE IS ENCOMPASSING THE VERTICAL SIDES OF THE BALE(S). ALL EXCAVATED SOIL SHALL BE PLACED ON THE UPHILL SIDE OF THE STRAW BALE(S) AND COMPACTED.

7. TWO (2) WOODEN STAKES SHALL BE USED TO HOLD EACH BALE IN PLACE. WOODEN STAKES SHALL BE 2"X2"X24". WOODEN STAKES SHALL BE DRIVEN 6" INTO THE GROUND.

STRAW BALE MAINTENANCE NOTES

1. INSPECT BMPs EACH WORKDAY, AND MAINTAIN THEM IN EFFECTIVE OPERATING CONDITION. MAINTENANCE OF BMPs SHOULD BE PROACTIVE, NOT REACTIVE. INSPECT BMPs AS SOON AS POSSIBLE (AND ALWAYS WITHIN 24 HOURS) FOLLOWING A STORM THAT CAUSES SURFACE EROSION, AND PERFORM NECESSARY MAINTENANCE.

2. FREQUENT OBSERVATIONS AND MAINTENANCE ARE NECESSARY TO MAINTAIN BMPs IN EFFECTIVE OPERATING CONDITION. INSPECTIONS AND CORRECTIVE MEASURES SHOULD BE DOCUMENTED THOROUGHLY.

3. WHERE BMPs HAVE FAILED, REPAIR OR REPLACEMENT SHOULD BE INITIATED UPON DISCOVERY OF THE FAILURE.

4. STRAW BALES SHALL BE REPLACED IF THEY BECOME HEAVILY SOILED, ROTTEN, OR DAMAGED BEYOND REPAIR.

5. SEDIMENT ACCUMULATED UPSTREAM OF STRAW BALE BARRIER SHALL BE REMOVED AS NEEDED TO MAINTAIN FUNCTIONALITY OF THE BMP. TYPICALLY WHEN DEPTH OF ACCUMULATED SEDIMENTS IS APPROXIMATELY ½ OF THE HEIGHT OF THE STRAW BALE BARRIER.

6. STRAW BALES ARE TO REMAIN IN PLACE UNTIL THE UPSTREAM DISTURBED AREA IS STABILIZED AND APPROVED BY THE LOCAL JURISDICTION.

7. WHEN STRAW BALES ARE REMOVED, ALL DISTURBED AREAS SHALL BE COVERED WITH TOPSOIL, SEEDED AND MULCHED OR OTHERWISE STABILIZED AS APPROVED BY LOCAL JURISDICTION.

(DETAILS ADAPTED FROM TOWN OF PARKER, COLORADO, NOT AVAILABLE IN AUTOCAD)

NOTE: MANY JURISDICTIONS HAVE BMP DETAILS THAT VARY FROM UDFCD STANDARD DETAILS. CONSULT WITH LOCAL JURISDICTIONS AS TO WHICH DETAIL SHOULD BE USED WHEN DIFFERENCES ARE NOTED.

Sediment Control Log (SCL) SC-2

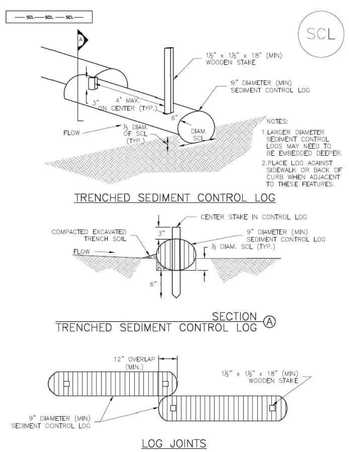

SCL–1. TRENCHED SEDIMENT CONTROL LOG

Silt Fence (SF) SC-1

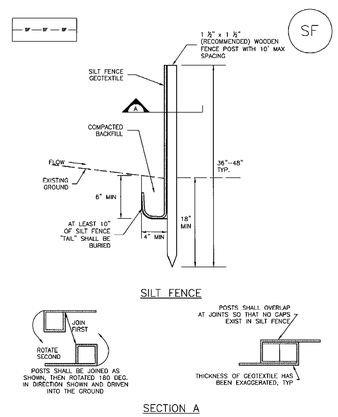

SF–1. SILT FENCE

Vehicle Tracking Control (VTC) SM-4

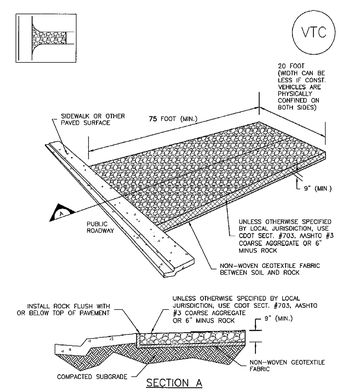

VTC–1. AGGREGATE VEHICLE TRACKING CONTROL

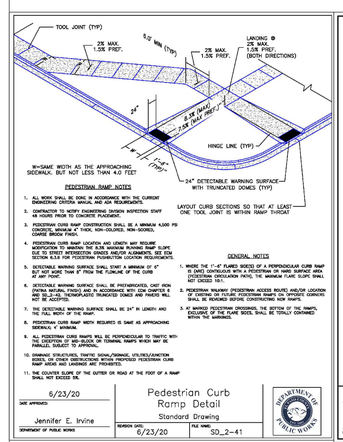

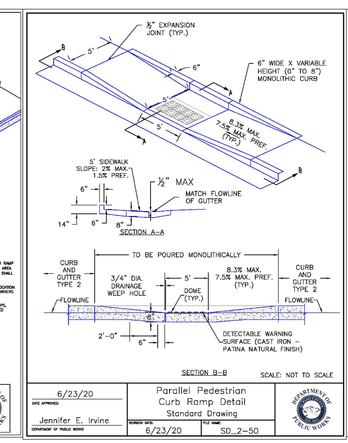

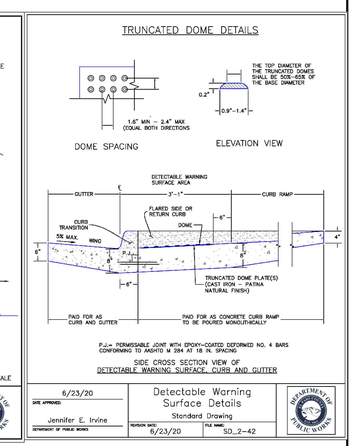

PCD FILE # SF2237

48 HOURS BEFORE YOU DIG, CALL UTILITY LOCATORS
811
UTILITY NOTIFICATION CENTER OF COLORADO
IT'S THE LAW

THE LOCATIONS OF EXISTING UNDERGROUND UTILITIES ARE SHOWN IN AN APPROXIMATE WAY ONLY. THE CONTRACTOR SHALL DETERMINE THE EXACT LOCATION OF ALL EXISTING UTILITIES BEFORE COMMENCING WORK. THE CONTRACTOR SHALL BE FULLY RESPONSIBLE FOR ANY AND ALL DAMAGES WHICH MIGHT BE CAUSED BY HIS FAILURE TO EXACTLY LOCATE AND PRESERVE ANY AND ALL UNDERGROUND UTILITIES.

NO.	REVISION	DATE

REVIEW:

PREPARED UNDER MY DIRECT SUPERVISION FOR AND ON BEHALF OF CLASSIC CONSULTING ENGINEERS AND SURVEYORS, LLC

COLORADO LICENSED 29794 KYLE RAYE CAMPBELL PROFESSIONAL ENGINEER

KYLE R. CAMPBELL, P.E. #29794 — 8-9-24 DATE

CLASSIC CONSULTING
619 N. Cascade Avenue, Suite 200
Colorado Springs, Colorado 80903
(719)785–0790
(719)785–0799(Fax)

STERLING RANCH EAST FILING NO. 2
CONSTRUCTION PLANS
GRADING AND EROSION CONTROL PLAN
DETAIL SHEET

DESIGNED BY	JDP	SCALE		DATE	11/13/23
DRAWN BY	JDP	(H) 1"= N/A		SHEET 7	OF 15
CHECKED BY	KRC	(V) 1"= N/A		JOB NO.	1183.31

EPC 9/23/2024

*WHEN A TYPE R INLET IS USED WITH MOUNTABLE CURB AND GUTTER, 5.0' TRANSITION SHALL BE REQUIRED. TRANSITION SHALL BE PAID FOR AS CURB AND GUTTER.

(T) TRANSITION CURB DETAIL

N.T.S.

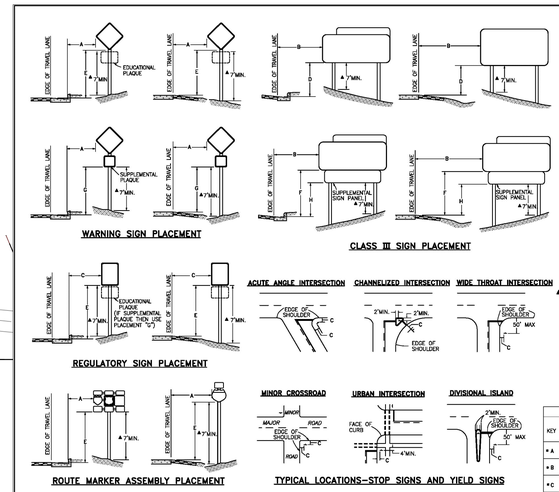

WARNING SIGN PLACEMENT

CLASS III SIGN PLACEMENT

REGULATORY SIGN PLACEMENT

ROUTE MARKER ASSEMBLY PLACEMENT

TYPICAL LOCATIONS–STOP SIGNS AND YIELD SIGNS

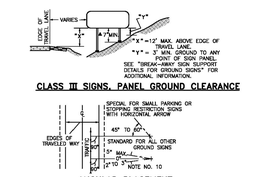

CLASS III SIGNS, PANEL GROUND CLEARANCE

ANGULAR PLACEMENT

GENERAL NOTES

1. THE ENGINEER SHALL ESTABLISH GRADES AND LOCATIONS FOR ALL SIGN POSTS IN ACCORDANCE WITH DETAILS SHOWN ON THE PLANS.
2. ALL SIGNS SHALL BE TAKEN IN SIGN LOCATION TO ENSURE AN UNOBSTRUCTED VIEW OF EACH SIGN.
3. MINIMUM POST EMBEDMENT SHALL BE 3' FOR U-3 POSTS AND 4"X4" TIMBER POSTS, AND 3' FOR 6"X6" TIMBER POSTS. FOR FOOTING DEPTH SEE THE APPLICABLE STANDARD.
4. NORMAL VERTICAL PLACEMENT IS MEASURED FROM FACE OF CURB OR FROM ADJACENT PAVEMENT PLANES FOR NORMAL OR EMERGENCY TRAVEL OF VEHICLES.
5. NORMAL LATERAL PLACEMENT IS MEASURED FROM THE EDGE OF TRAVEL LANE.
6. IN URBAN AREAS A LATERAL CLEARANCE OF 1' FROM THE CURB FACE IS PERMISSIBLE WHERE SIDEWALK WIDTH IS LIMITED OR WHERE EXISTING POLES ARE CLOSE TO THE CURB.
7. A 1' MINIMUM POST LENGTH SHALL BE MAINTAINED FROM BOTTOM OF SIGN PANEL TO THE GROUND OR TOP OF THE FOOTING.
8. A 5' MINIMUM POST LENGTH SHALL BE MAINTAINED FROM THE BOTTOM OF SIGN PANEL TO THE GROUND OR TOP OF THE FOOTING UNLESS OTHERWISE INDICATED ON THE PLAN.
9. "EDUCATIONAL PLAQUES" FOR SYMBOL SIGNS WILL NOT BE CONSIDERED WHEN DETERMINING SIGN PLACEMENT.
10. WHEN LATERAL PLACEMENT IS 30' OR MORE FOR SIGNS WITHOUT A SUPPLEMENTAL PANEL, VERTICAL PLACEMENT 2 MAY BE REDUCED TO 5'. WHEN LATERAL PLACEMENT IS 30' OR MORE FOR SIGNS WITH A SUPPLEMENTAL PANEL, VERTICAL PLACEMENT 2 DOES NOT APPLY – USE ONLY VERTICAL PLACEMENT 3.
11. NORMAL ANGULAR PLACEMENT IS 0°. SIGNS CLOSER THAN 30' SHOULD BE ANGULARLY ORIENTED TO MINIMIZE REFLECTIVE REFLECTION. SIGNS PLACED 30' OR MORE SHOULD BE ORIENTED TO BISECT THE ANGLE OF THE ROAD.
12. THE EXIT PANEL IS MOUNTED ON THE RIGHT HAND SIDE FOR RIGHT HAND EXITS AND THE LEFT SIDE FOR LEFT HAND EXITS.
13. POST SHALL BE INSTALLED PLUMB. VERTICAL DEVIATION SHALL NOT EXCEED 1/4" IN 10'.

PLACEMENT TABLES

KEY	LATERAL PLACEMENT: ALL CLASSES OF STREETS AND HIGHWAYS – MINIMUM	LATERAL PLACEMENT: ALL CLASSES OF STREETS AND HIGHWAYS – NORMAL	KEY	VERTICAL PLACEMENT (MINIMUM) (9' MAXIMUM): FREEWAYS AND EXPRESSWAYS	VERTICAL PLACEMENT: CONVENTIONAL STREETS AND HIGHWAYS – URBAN	VERTICAL PLACEMENT: CONVENTIONAL STREETS AND HIGHWAYS – RURAL
* A	2'-0" & NOTE NO.4	6"-0"PLUS CURB OR SHOULDER WIDTH	D	7'-0" OR NOTE NO. 10	7'-0"	5'-0"
			E	6'-0"	7'-0"	5'-0"
* B	2'-0" & NOTE NO.4	10'-0" OR WIDE RECOVERY AREA OR SHOULDER	F	8'-0" OR NOTE NO. 10	7'-0"	5'-0"
* C	2'-0" & NOTE NO.4	6"-0"PLUS CURB OR SHOULDER WIDTH OR IF NONE 12'-0"	G	6'-0"	6'-0"	4'-0"
			H	5'-0"	6'-0"	4'-0"

* SEE NOTE NO. 6

TYPICAL GROUND SIGN PLACEMENT

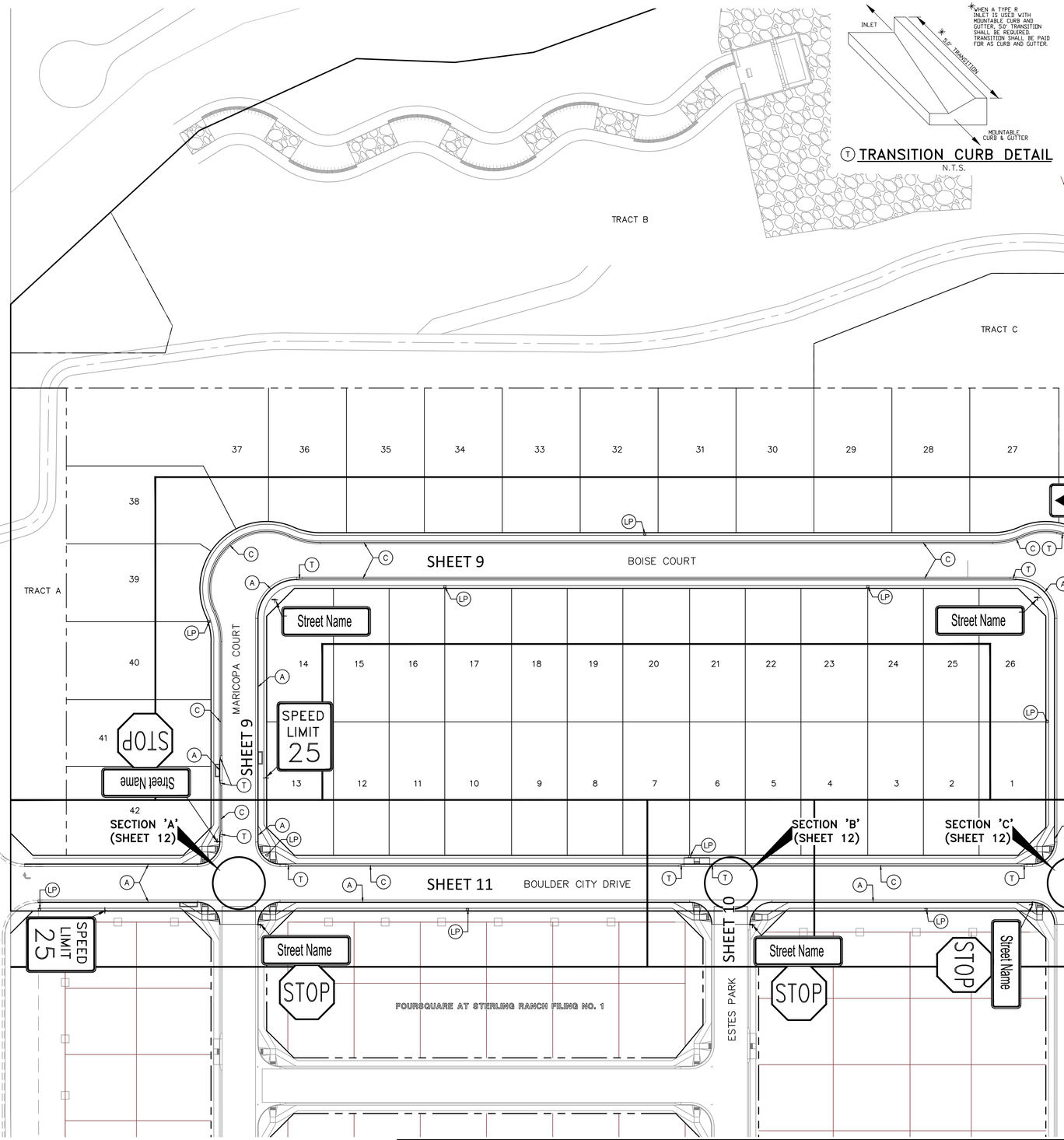

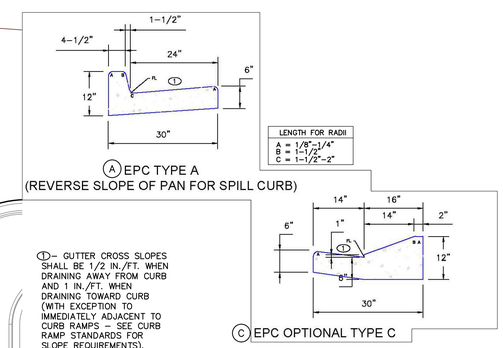

LENGTH FOR RADII
A = 1/8"-1/4"
B = 1-1/2"
C = 1-1/2"-2"

(1)– GUTTER CROSS SLOPES SHALL BE 1/2 IN./FT. WHEN DRAINING AWAY FROM CURB AND 1 IN./FT. WHEN DRAINING TOWARD CURB (WITH EXCEPTION TO IMMEDIATELY ADJACENT TO CURB RAMPS – SEE CURB RAMP STANDARDS FOR SLOPE REQUIREMENTS).

CURB AND GUTTER DETAILS

NOTE:
ALL INTERNAL SIGNS SHALL BE 4" FONT LETTER SIZE.

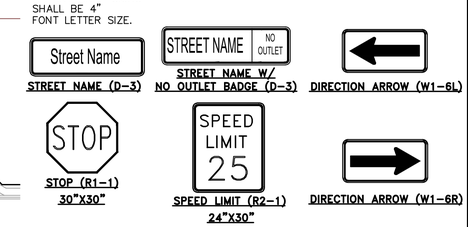

STREET NAME (D-3) | STREET NAME W/ NO OUTLET BADGE (D-3) | DIRECTION ARROW (W1-6L)

STOP (R1-1) 30"X30" | SPEED LIMIT (R2-1) 24"X30" | DIRECTION ARROW (W1-6R)

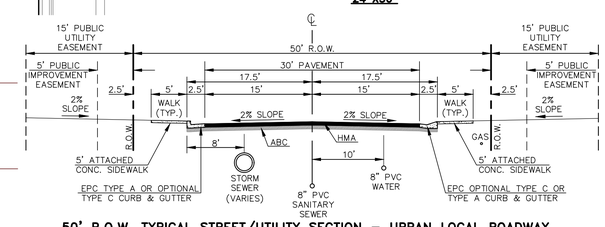

50' R.O.W. TYPICAL STREET/UTILITY SECTION – URBAN LOCAL ROADWAY

SCALE 1" = 10'

PCD FILE # SF2237

SCALE: 1" = 50'

48 HOURS BEFORE YOU DIG, CALL UTILITY LOCATORS
811
UTILITY NOTIFICATION CENTER OF COLORADO
IT'S THE LAW

THE LOCATIONS OF EXISTING UNDERGROUND UTILITIES ARE SHOWN IN AN APPROXIMATE WAY ONLY. THE CONTRACTOR SHALL DETERMINE THE EXACT LOCATION OF ALL EXISTING UTILITIES BEFORE COMMENCING WORK. THE CONTRACTOR SHALL BE FULLY RESPONSIBLE FOR ANY AND ALL DAMAGES WHICH MIGHT BE CAUSED BY HIS FAILURE TO EXACTLY LOCATE AND PRESERVE ANY AND ALL UNDERGROUND UTILITIES.

NO.	REVISION	DATE

REVIEW:

PREPARED UNDER MY DIRECT SUPERVISION FOR AND ON BEHALF OF CLASSIC CONSULTING ENGINEERS AND SURVEYORS, LLC

COLORADO LICENSED KYLE RATE CAMPBELL 29794 PROFESSIONAL ENGINEER

KYLE RATE CAMPBELL, COLORADO P.E. #29794 — 8-9-24 DATE

CLASSIC CONSULTING
619 N. Cascade Avenue, Suite 200
Colorado Springs, Colorado 80903
(719)785-0790
(719)785-0799(Fax)

STERLING RANCH EAST FILING NO. 2
CONSTRUCTION PLANS
KEY MAP WITH TYPICAL STREET SECTIONS

DESIGNED BY	JDP	SCALE	DATE	8/8/24
DRAWN BY	JDP	(H) 1"= 50'	SHEET	8 OF 15
CHECKED BY	KRC	(V) 1"= N/A	JOB NO.	1183.31

EPC 9/23/2024

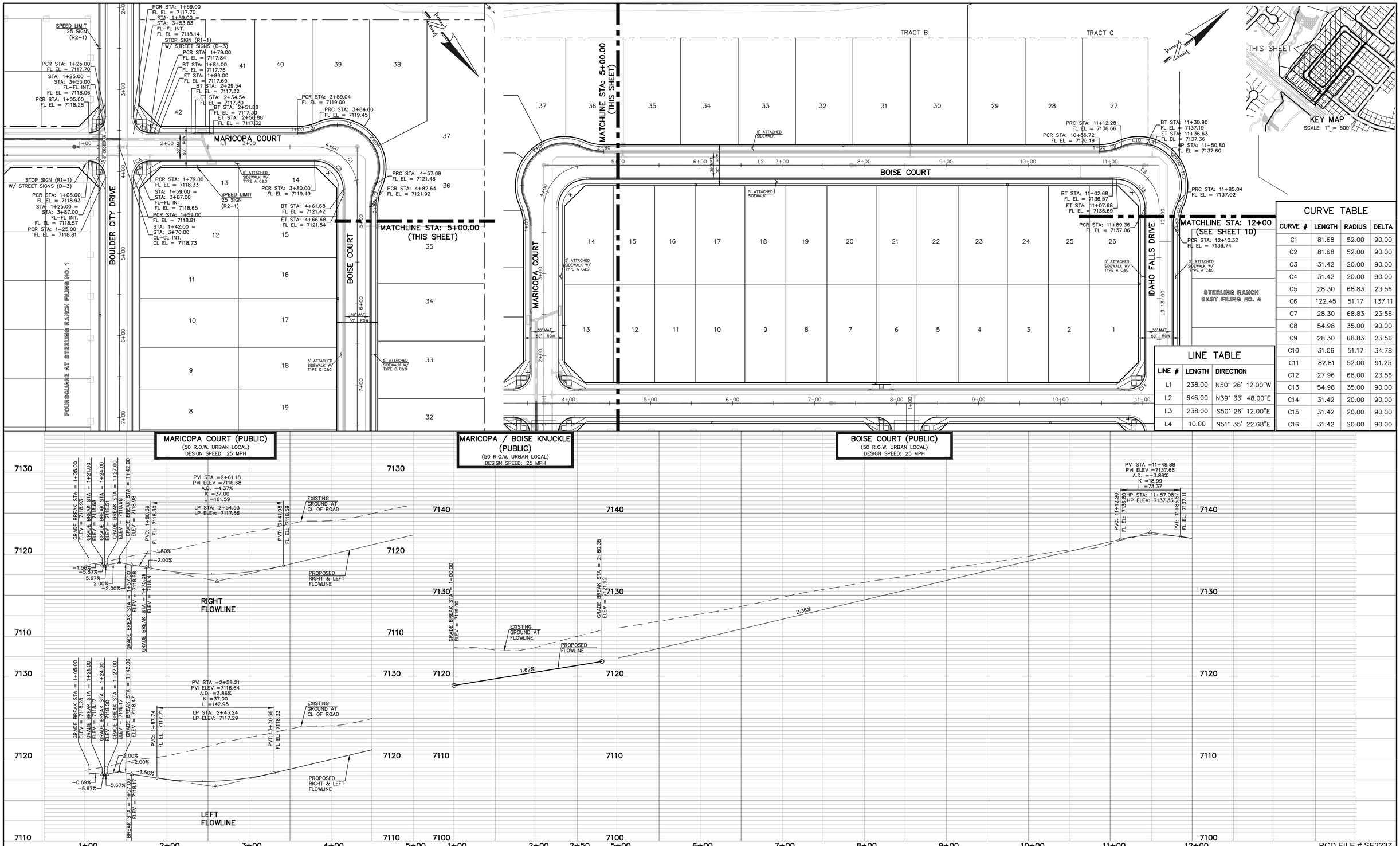

CURVE TABLE

CURVE #	LENGTH	RADIUS	DELTA
C1	81.68	52.00	90.00
C2	81.68	52.00	90.00
C3	31.42	20.00	90.00
C4	31.42	20.00	90.00
C5	28.30	68.83	23.56
C6	122.45	51.17	137.11
C7	28.30	68.83	23.56
C8	54.98	35.00	90.00
C9	28.30	68.83	23.56
C10	31.06	51.17	34.78
C11	82.81	52.00	91.25
C12	27.96	68.00	23.56
C13	54.98	35.00	90.00
C14	31.42	20.00	90.00
C15	31.42	20.00	90.00
C16	31.42	20.00	90.00

LINE TABLE

LINE #	LENGTH	DIRECTION
L1	238.00	N50° 26' 12.00"W
L2	646.00	N39° 33' 48.00"E
L3	238.00	S50° 26' 12.00"E
L4	10.00	N51° 35' 22.68"E

LEGEND

- BOUNDARY LINE
- ROW LINE
- LOT LINE
- CURB & GUTTER
- PED RAMP
- LIGHT POLE
- SIGN
- TYPE R INLET

SCALE: 1" = 50' HORIZ./5' VERT.

STREET ABBREVIATION INDEX

B.C.	BOISE COURT
B.C.D.	BOULDER CITY DRIVE
M.C.	MARICOPA COURT
E.P.	ESTES PARK
I.F.D.	IDAHO FALLS DRIVE

48 HOURS BEFORE YOU DIG, CALL UTILITY LOCATORS
811
UTILITY NOTIFICATION CENTER OF COLORADO
IT'S THE LAW

THE LOCATIONS OF EXISTING UNDERGROUND UTILITIES ARE SHOWN IN AN APPROXIMATE WAY ONLY. THE CONTRACTOR SHALL DETERMINE THE EXACT LOCATION OF ALL EXISTING UTILITIES BEFORE COMMENCING WORK. THE CONTRACTOR SHALL BE FULLY RESPONSIBLE FOR ANY AND ALL DAMAGES WHICH MIGHT BE CAUSED BY HIS FAILURE TO EXACTLY LOCATE AND PRESERVE ANY AND ALL UNDERGROUND UTILITIES.

NO.	REVISION	DATE

REVIEW:

PREPARED UNDER MY DIRECT SUPERVISION FOR AND ON BEHALF OF CLASSIC CONSULTING ENGINEERS AND SURVEYORS, LLC

COLORADO LICENSED — KYLE WAYNE CAMPBELL — 29794 — PROFESSIONAL ENGINEER

KYLE W. CAMPBELL, COLORADO P.E. #29794 — 8-9-24 DATE

CLASSIC CONSULTING
619 N. Cascade Avenue, Suite 200
Colorado Springs, Colorado 80903
(719)785-0790
(719)785-0799(Fax)

STERLING RANCH EAST FILING NO. 2
CONSTRUCTION PLANS
PUBLIC STREET IMPROVEMENT PLAN

DESIGNED BY	JDP	SCALE		DATE	8/8/24
DRAWN BY	JDP	(H) 1"=	50'	SHEET 9	OF 15
CHECKED BY	KRC	(V) 1"=	5'	JOB NO.	1183.31

EPC 9/23/2024

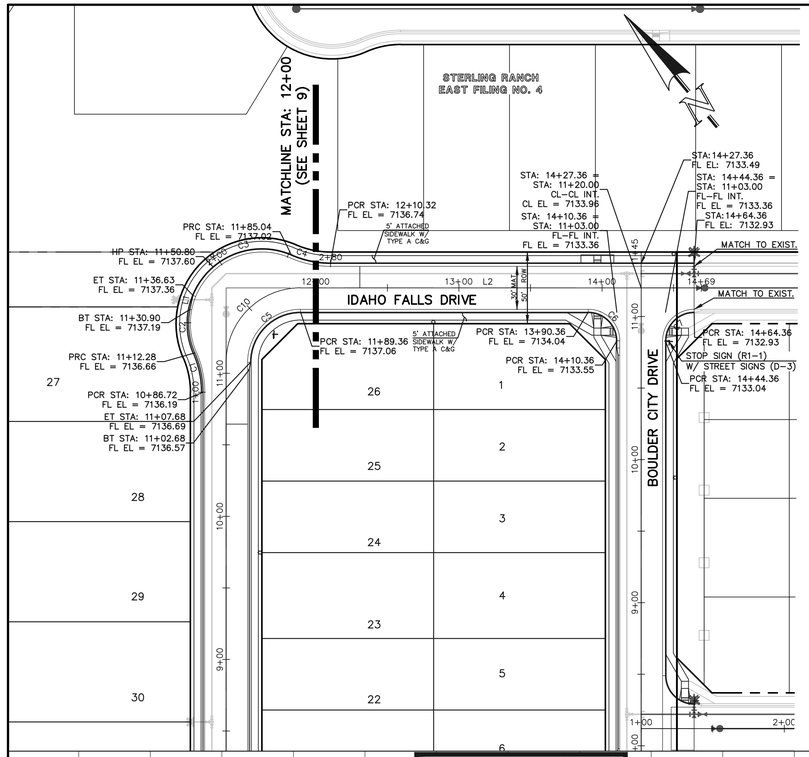

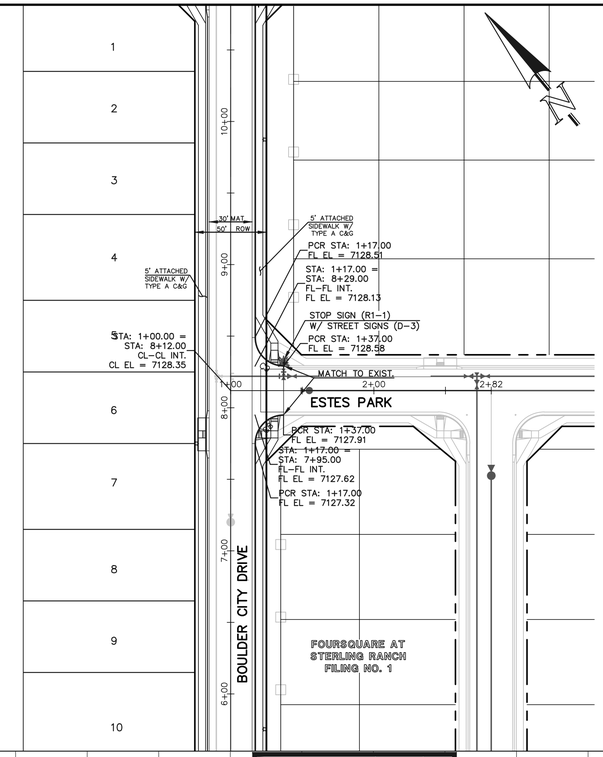

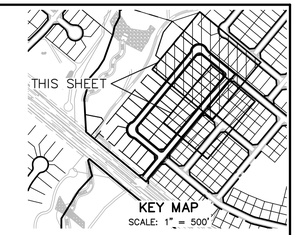

CURVE TABLE			
CURVE #	LENGTH	RADIUS	DELTA
C1	28.30	68.83	23.56
C2	31.06	51.17	34.78
C3	82.81	52.00	91.25
C4	27.96	68.00	23.56
C5	54.98	35.00	90.00
C6	31.42	20.00	90.00
C7	31.42	20.00	90.00
C8	31.42	20.00	90.00
C9	31.42	20.00	90.00
C10	81.68	52.00	90.00

LINE TABLE		
LINE #	LENGTH	DIRECTION
L1	10.00	N51° 35' 22.68"E
L2	238.00	S50° 26' 12.00"E

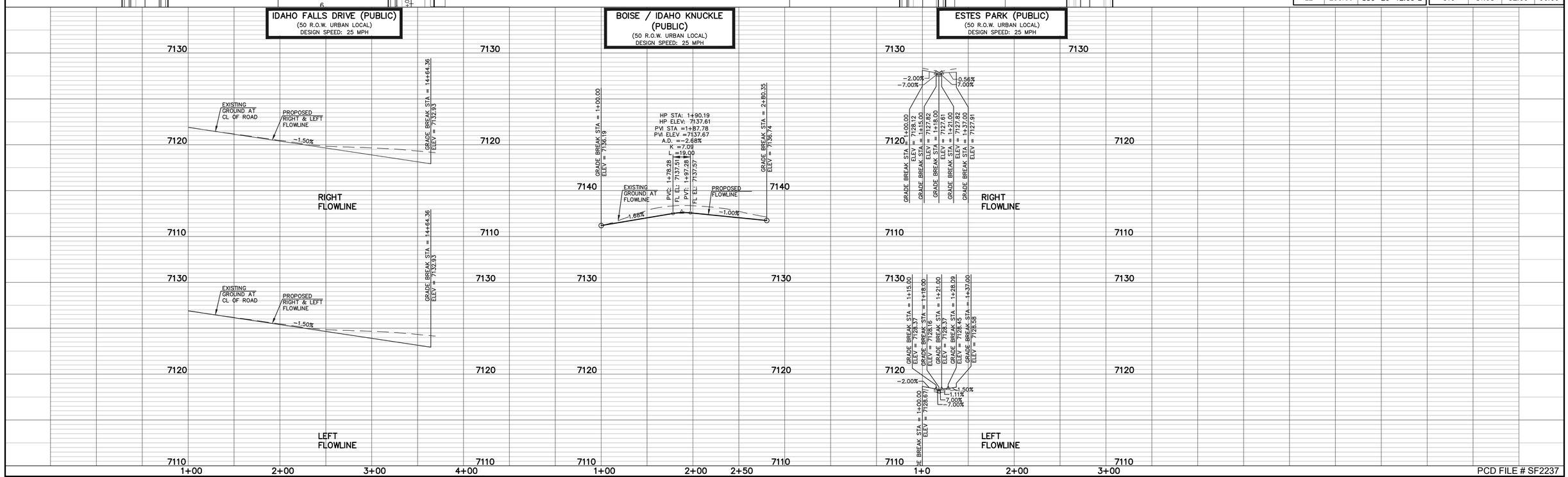

PCD FILE # SF2237

LEGEND

- BOUNDARY LINE
- ROW LINE
- LOT LINE
- CURB & GUTTER
- PED RAMP
- LIGHT POLE
- SIGN
- TYPE R INLET

SCALE: 1" = 50' HORIZ./5' VERT.

STREET ABBREVIATION INDEX	
B.C.	BOISE COURT
B.C.D.	BOULDER CITY DRIVE
M.C.	MARICOPA COURT
E.P.	ESTES PARK
I.F.D.	IDAHO FALLS DRIVE

48 HOURS BEFORE YOU DIG, CALL UTILITY LOCATORS
811
UTILITY NOTIFICATION CENTER OF COLORADO
IT'S THE LAW

THE LOCATIONS OF EXISTING UNDERGROUND UTILITIES ARE SHOWN IN AN APPROXIMATE WAY ONLY. THE CONTRACTOR SHALL DETERMINE THE EXACT LOCATION OF ALL EXISTING UTILITIES BEFORE COMMENCING WORK. THE CONTRACTOR SHALL BE FULLY RESPONSIBLE FOR ANY AND ALL DAMAGES WHICH MIGHT BE CAUSED BY HIS FAILURE TO EXACTLY LOCATE AND PRESERVE ANY AND ALL UNDERGROUND UTILITIES.

NO.	REVISION	DATE

REVIEW:

PREPARED UNDER MY DIRECT SUPERVISION FOR AND ON BEHALF OF CLASSIC CONSULTING ENGINEERS AND SURVEYORS, LLC

COLORADO LICENSED KYLE RAYE CAMPBELL 29794 PROFESSIONAL ENGINEER

KYLE R. CAMPBELL, COLORADO P.E. #29794 — 8-9-24 DATE

CLASSIC CONSULTING
619 N. Cascade Avenue, Suite 200
Colorado Springs, Colorado 80903
(719)785-0790
(719)785-0799(Fax)

STERLING RANCH EAST FILING NO. 2
CONSTRUCTION PLANS
PUBLIC STREET IMPROVEMENT PLAN

DESIGNED BY	JDP	SCALE		DATE	8/8/24
DRAWN BY	JDP	(H) 1"=	50'	SHEET 10	OF 15
CHECKED BY	KRC	(V) 1"=	5'	JOB NO.	1183.31

EPC 9/23/2024

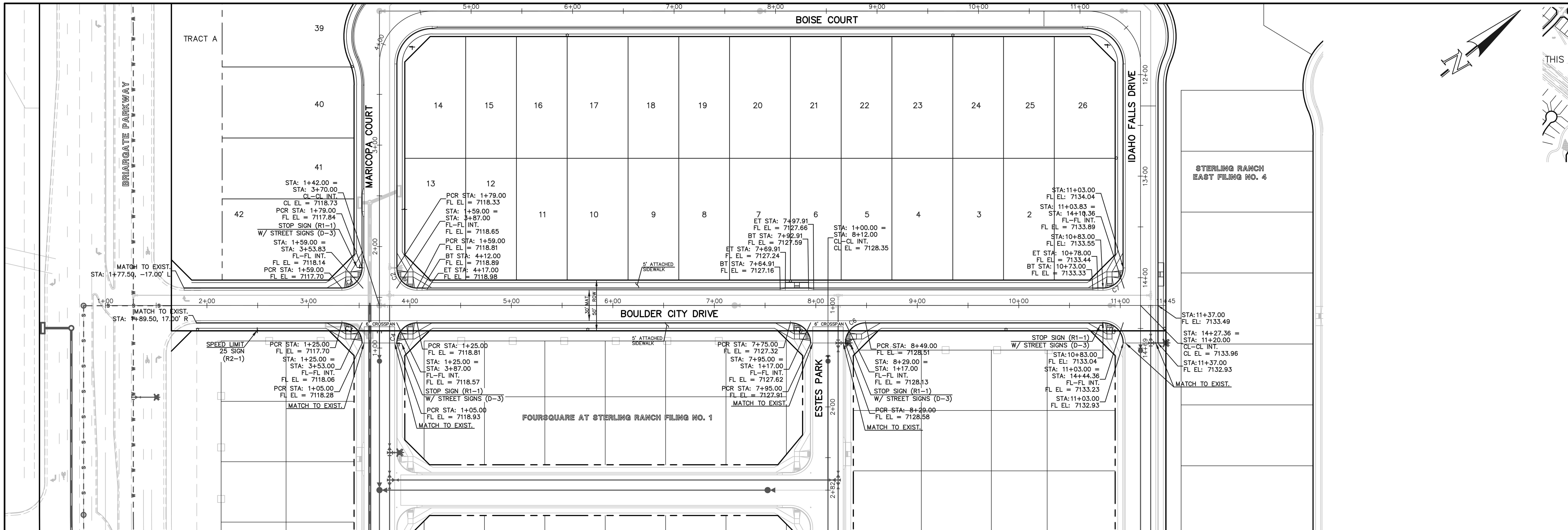

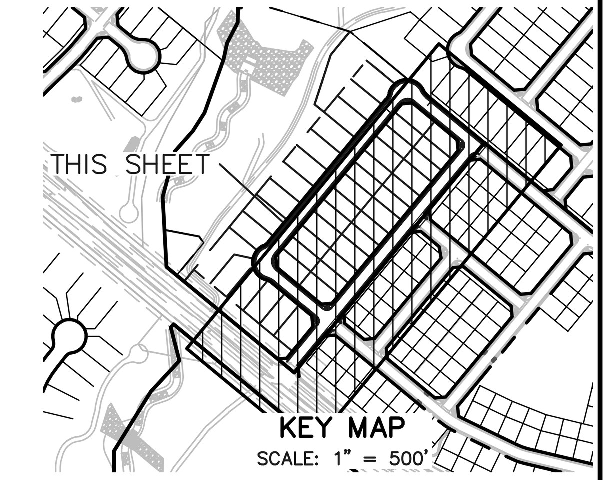

CURVE TABLE

CURVE #	LENGTH	RADIUS	DELTA
C1	31.42	20.00	90.00
C2	31.42	20.00	90.00
C3	31.42	20.00	90.00
C4	31.42	20.00	90.00
C5	31.42	20.00	90.00
C6	31.42	20.00	90.00
C7	31.42	20.00	90.00
C8	31.42	20.00	90.00

PCD FILE # SF2237

LEGEND

- BOUNDARY LINE
- ROW LINE
- LOT LINE
- CURB & GUTTER
- PED RAMP
- LIGHT POLE
- SIGN
- TYPE R INLET

SCALE: 1" = 50' HORIZ./5' VERT.

STREET ABBREVIATION INDEX

B.C.	BOISE COURT
B.C.D.	BOULDER CITY DRIVE
M.C.	MARICOPA COURT
E.P.	ESTES PARK
I.F.D.	IDAHO FALLS DRIVE

48 HOURS BEFORE YOU DIG, CALL UTILITY LOCATORS

811

UTILITY NOTIFICATION CENTER OF COLORADO
IT'S THE LAW

THE LOCATIONS OF EXISTING UNDERGROUND UTILITIES ARE SHOWN IN AN APPROXIMATE WAY ONLY. THE CONTRACTOR SHALL DETERMINE THE EXACT LOCATION OF ALL EXISTING UTILITIES BEFORE COMMENCING WORK. THE CONTRACTOR SHALL BE FULLY RESPONSIBLE FOR ANY AND ALL DAMAGES WHICH MIGHT BE CAUSED BY HIS FAILURE TO EXACTLY LOCATE AND PRESERVE ANY AND ALL UNDERGROUND UTILITIES.

NO.	REVISION	DATE

REVIEW:

PREPARED UNDER MY DIRECT SUPERVISION FOR AND ON BEHALF OF CLASSIC CONSULTING ENGINEERS AND SURVEYORS, LLC

KYLE R. CAMPBELL, COLORADO P.E. #29794 — 8-9-24 DATE

COLORADO LICENSED KYLE RAYE CAMPBELL 29794 PROFESSIONAL ENGINEER

CLASSIC CONSULTING

619 N. Cascade Avenue, Suite 200, Colorado Springs, Colorado 80903 — (719)785-0790, (719)785-0799(Fax)

STERLING RANCH EAST FILING NO. 2
CONSTRUCTION PLANS
PUBLIC STREET IMPROVEMENT PLAN

DESIGNED BY	JDP	SCALE		DATE	8/8/24
DRAWN BY	JDP	(H) 1"= 50'		SHEET 11	OF 15
CHECKED BY	KRC	(V) 1"= 5'		JOB NO.	1183.31

EPC 9/23/2024

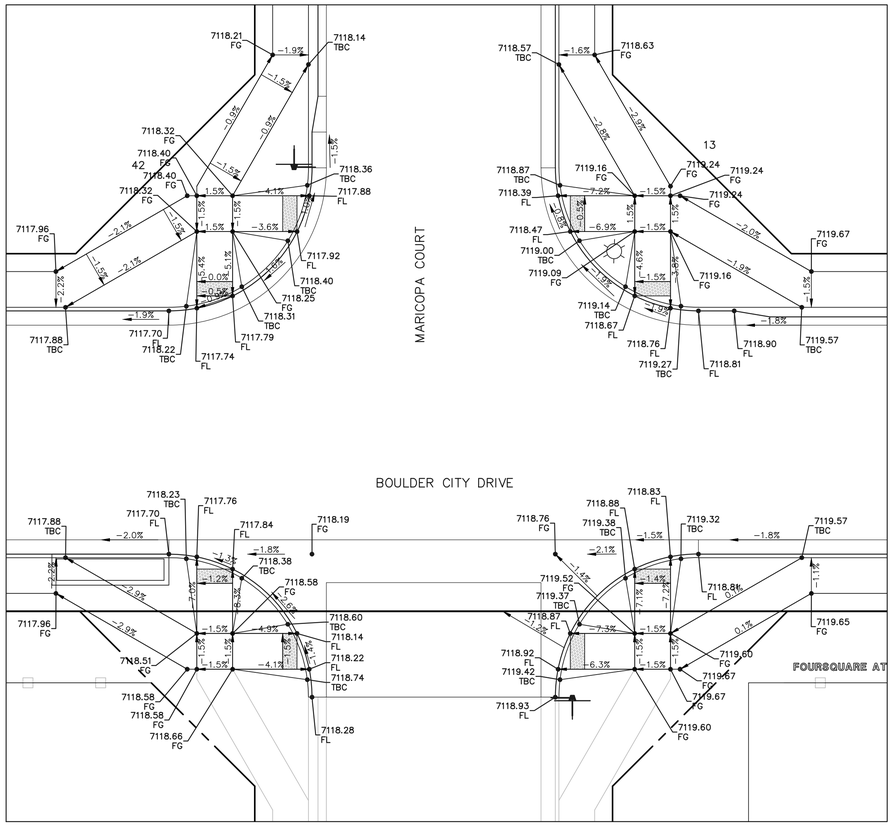

SECTION 'A'

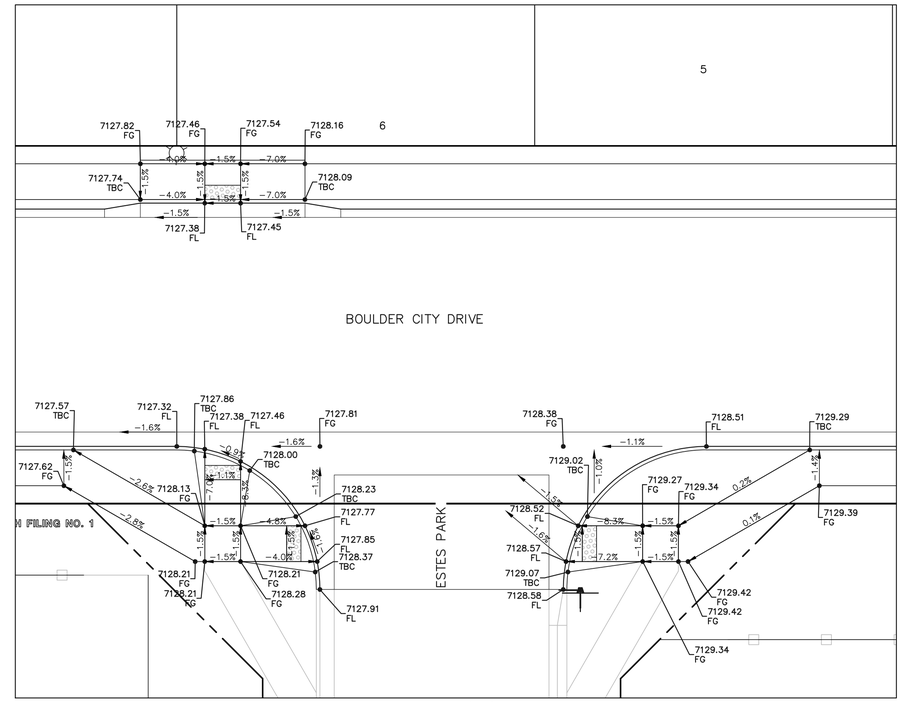

SECTION 'B'

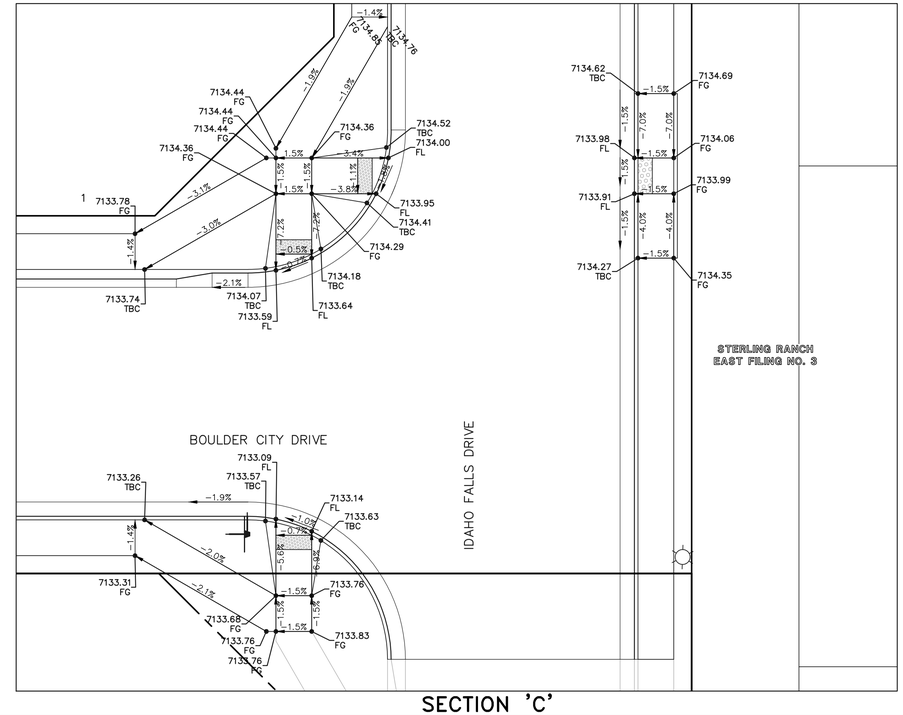

SECTION 'C'

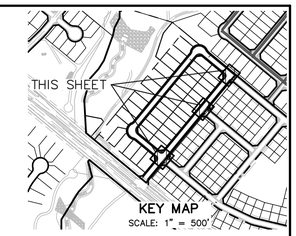

10 5 0 10 20

SCALE: 1" = 10'

48 HOURS BEFORE YOU DIG,
CALL UTILITY LOCATORS
811
UTILITY NOTIFICATION CENTER OF COLORADO
IT'S THE LAW

THE LOCATIONS OF EXISTING UNDERGROUND UTILITIES ARE SHOWN IN AN APPROXIMATE WAY ONLY. THE CONTRACTOR SHALL DETERMINE THE EXACT LOCATION OF ALL EXISTING UTILITIES BEFORE COMMENCING WORK. THE CONTRACTOR SHALL BE FULLY RESPONSIBLE FOR ANY AND ALL DAMAGES WHICH MIGHT BE CAUSED BY HIS FAILURE TO EXACTLY LOCATE AND PRESERVE ANY AND ALL UNDERGROUND UTILITIES.

NO.	REVISION	DATE

REVIEW:

PREPARED UNDER MY DIRECT SUPERVISION FOR AND ON BEHALF OF CLASSIC CONSULTING ENGINEERS AND SURVEYORS, LLC

COLORADO LICENSED KYLE RAYE CAMPBELL 29794 PROFESSIONAL ENGINEER

KYLE R. CAMPBELL, COLORADO P.E. #29794 — 8-9-24 DATE

CLASSIC CONSULTING℠
619 N. Cascade Avenue, Suite 200
Colorado Springs, Colorado 80903
(719)785-0790
(719)785-0799(Fax)

PCD FILE # SF2237

STERLING RANCH EAST FILING NO. 2
CONSTRUCTION PLANS
PUBLIC STREET IMPROVEMENT PLAN
PEDESTRIAN RAMP DESIGN

DESIGNED BY	JDP	SCALE		DATE	8/8/24
DRAWN BY	JDP	(H) 1"= 10'		SHEET 12	OF 15
CHECKED BY	KRC	(V) 1"= N/A		JOB NO.	1183.31

EPC 9/23/2024

American Revolution LED
Series 247L

PRODUCT OVERVIEW

Features:

- Die-cast aluminum housing and hood for long-life performance
- Die-cast trigger latch (TL) and captive thumb screws option available for easy access to internal components
- Optical assembly designed for maximum performance, available in Type II, Type III and Type V
- Hinged hood and captive thumb screws provision afford quick, easy access to electrical and optical area for servicing
- Slipfitter with three set screws allows secure installation to pole sizes 2-3/8" or 3" O.D.
- Surge protection device (standard) exceeds ANSI C62.41 Category C1 criteria (surge tested at 10kV/5kA)
- Complies with ANSI: C136.2, C136.10, C136.15
- CSA listed and suitable for up to 30°C ambient
- Rated L70, LED life greater than 100,000 hours at 25°C
- Replaces up to 150W HPS light source incumbant models
- LED electronic 0V-10V dimmable driver
- DesignLights Consortium® (DLC) qualified product. Not all versions of this product may be DLC qualified. Please check the DLC Qualified Products List at www.designlights.org/QPL to confirm which versions are qualified.

Applications:

Streetscapes
Walkways
Pathways
Parks

MVEA SPEC # 247L 10LEDE10 MVOLT 4K R5 AY PCLL

DIMENSIONS

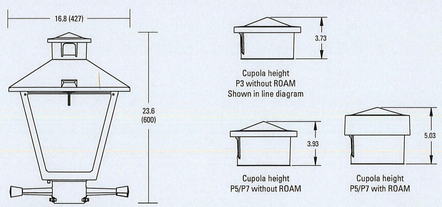

Effective Projected Area (EPA)
The EPA for the American Revolution Series 247 is 1.6 sq. ft.
P5 or P7 option total height is 24.9 (633).
Approx. Wt. = 36 lbs.

All dimensions are inches (millimeters) unless otherwise noted.

Note: Specifications subject to change without notice.
American Revolution Series 247L LED

AEL American Electric Lighting

American Revolution LED
Series 247L

ORDERING INFORMATION

Example: 247L 20LEDE70 MVOLT 4K R3 AY

Series		Performance Package		Voltage		Color Temperature (CCT)	
247L	American Revolution LED	**20LEDE10**	20 Chips, 1050 mA Driver, 72 input watts	**MVOLT**	Multi-volt, 120-277V	**3K**	3000K
		20LEDE70	20 Chips, 700 mA Driver, 45 input watts	**347**	347V	**4K**	4000K
		10LEDE10	10 Chips, 1050 mA Driver, 36 input watts	**480**	480V	**5K**	5000K
		10LEDE70	10 Chips, 700 mA Driver, 25 input watts				
		10LEDE53	10 Chips, 525 mA Driver, 18 input watts				
		10LEDE35	10 Chips, 350 mA Driver, 13 input watts				

Distribution		Optics		Options			
R2	Type II	**AY**	Acrylic	Paint [1]		Miscellaneous	
R3	Type III	**PY**	Polycarbonate	**(blank)**	Black (standard)	**SS**	Stainless steel hardware
R5	Type V			**GY**	Gray	**NL**	NEMA Label
				DDB	Dark Bronze	**XL**	Not CSA Listed
				WH	White	**TL**	Tool-less Entry
				BZ	Bronze	**LDR [7]**	Ladder Rest
				Photocontrol		**SH**	Shorting Cap
				(blank)	3 pin NEMA Photocontrol Receptacle (standard)	**SHX [9]**	Not CSA Listed Shorting Cap
				NR [2]	No Photocontrol Receptacle	**HSB**	House Side Shield Black
				P5 [3]	5 pin NEMA Photocontrol Receptacle (dimmable driver included)	**HSW**	House Side Shield White
				P7 [3]	7 pin NEMA Photocontrol Receptacle (dimmable driver included)	**CR**	Enhanced Corrosion Resistant Finish
				PCLL [4,5]	Solid State Long Life Photocontrol	**RCC [8]**	ROAM Dimming Node Cupola Cover
				PCSS [4,5,6]	Not CSA Listed Solid State Long Life Photocontrol (120-277V)	Accessories	
						RNCS7 [7]	ROAM Dimming Node Cupola Cover

Cupola size based on type of control and receptacle

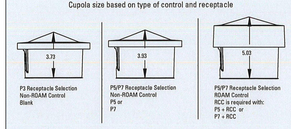

Notes:

1. Other colors available, please contact factory
2. PC and SH not available with NR option
3. Taller cupola cover (RCC) is required when used with ROAM or other similar wireless monitoring control systems
4. Standard failure mode= "Fail On"
5. Photocontrols supplied with ANSI Standard Turn-On levels
6. XL option is required
7. Ships with unit, field installed
8. Required when using ROAM or other similar wireless monitoring control systems

AEL American Electric Lighting
AEL Headquarters, 3825 Columbus Road, Granville, OH 43023
www.americanelectriclighting.com
© 2017 Acuity Brands Lighting, Inc. All Rights Reserved. 07/28/17

Warranty Five-year limited warranty. Complete warranty terms located at:
www.acuitybrands.com/CustomerResources/Terms_and_conditions.aspx
Actual performance may differ as a result of end-user environment and application.
All values are design or typical values, measured under laboratory conditions at 25 °C.
Specifications subject to change without notice.

Please contact your sales representative for the latest product information.

MARATHON

ORIENTATION VIEWED FROM TOP OF POLE

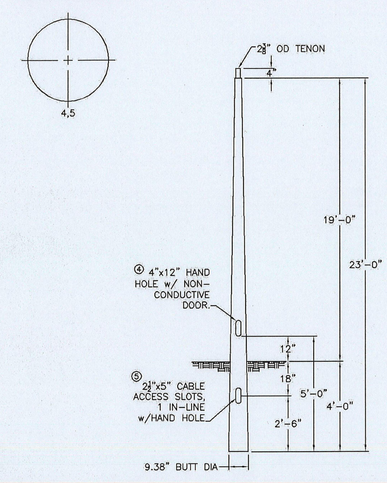

COLOR: BLACK

CMT by valmont
CMT
145 Wood Street
Estill, SC 29918
800-416-4276
www.cmtpoles.com

QUANTITY:	JOB NUMBER:		
PO. NUMBER:	APPD BY:		
REV.	DATE	BY	REMARKS
			QUOTE:

MOUNTAIN VIEW

CAT. NO.: TB23-D-50-3-H-T238	
SPECS:	WIND VEL.: 100@1.3
TOT. LENGTH: 23'-0"	LUM. WEIGHT: 50 lbs.
EMBED. DEPTH: 4'-0"	LUM. EPA: 3.50 sq.ft.
TIP WIDTH: 4.41"	STATIC DEFL.:
WEIGHT: 50 lbs.	TOTAL DEFL.:
DRAWN BY: PLF	DATE: 01/16/2017

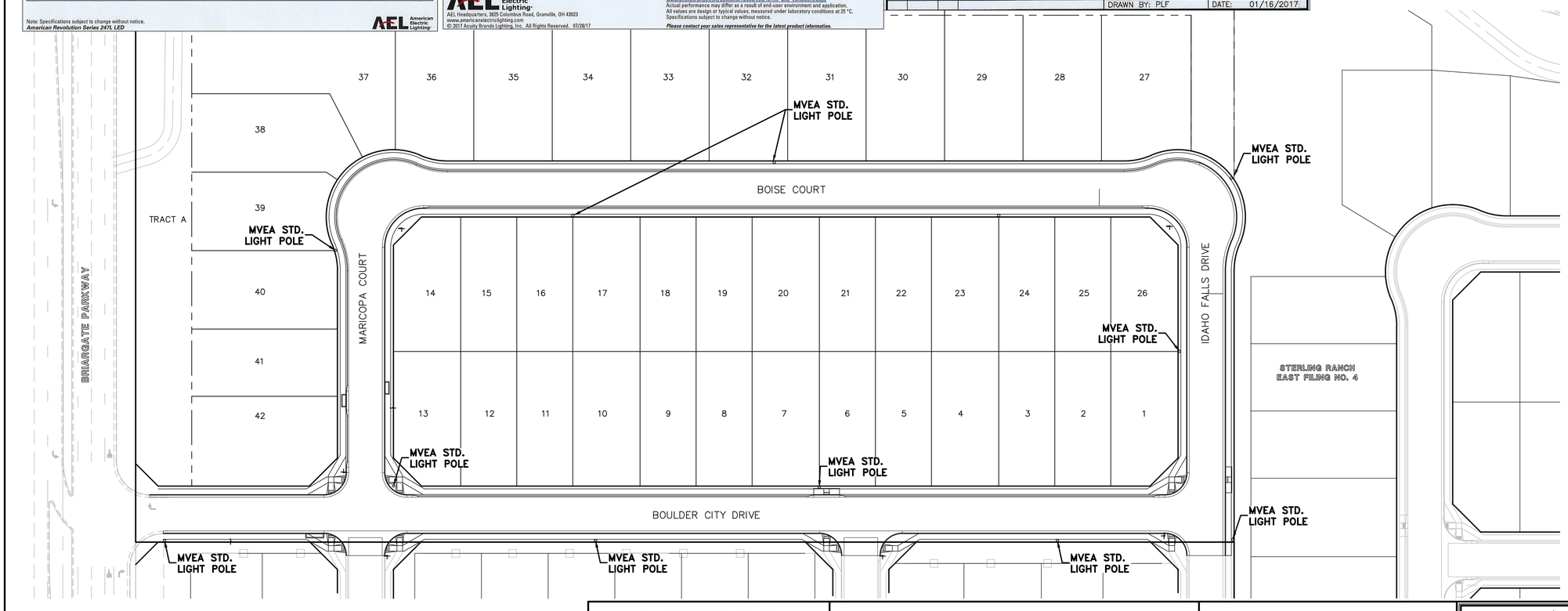

LIGHT POLE OWNERSHIP AND RESPONSIBILITY:

DEVELOPER RESPONSIBLE FOR COST OF POLE DESIGN AND INSTALL

MVEA OWNS AND MAINTAINS LIGHT POLES UPON INSTALL

LOCAL DISTRICT/HOA RESPONSIBLE FOR LIGHT POLE ELECTRICITY COSTS

LIGHT POLE LOCATION WITHIN URBAN ROADWAY:

CRITERIA PER ECM 4.3.5.D.2

URBAN LOCAL CLEAR ZONE = 12'

POLE LOCATION = 6.5' MIN. FROM TBC AND 1.0' INSIDE 50' ROW

LIGHT POLE NOTES:

ALL LIGHT FIXTURES MOUNTED WITHIN 15' OF ANY RESIDENTIAL PROPERTY LINE OF THE SITE SHALL BE CLASSIFIED AS IES TYPE II OR TYPE III, OR FIXTURE DEMONSTRATED TO PROVIDE SIMILAR DISTRIBUTION PATTERNS AND SHIELDING PROPERTIES. FIXTURES SHALL BE FITTED WITH "HOUSE SIDE SHIELD" REFLECTORS ON THE SIDES FACING THE RESIDENTIAL PROPERTY LINE. LDC 6.2.3

HEIGHT. NO FREESTANDING LIGHT FIXTURES SHALL BE MOUNTED HIGHER THAN 15 FEET, EXCEPT PARKING LOT LIGHT FIXTURES WHICH SHALL BE MOUNTED NO HIGHER THAN 20 FEET UNLESS AN ALTERNATIVE LIGHTING PROPOSAL IS APPROVED IN ACCORDANCE WITH THIS CODE. LDC 6.2.3

PCD FILE # SF2237

N

50 25 0 50 100
SCALE: 1" = 50'

48 HOURS BEFORE YOU DIG, CALL UTILITY LOCATORS
811
UTILITY NOTIFICATION CENTER OF COLORADO
IT'S THE LAW

THE LOCATIONS OF EXISTING UNDERGROUND UTILITIES ARE SHOWN IN AN APPROXIMATE WAY ONLY. THE CONTRACTOR SHALL DETERMINE THE EXACT LOCATION OF ALL EXISTING UTILITIES BEFORE COMMENCING WORK. THE CONTRACTOR SHALL BE FULLY RESPONSIBLE FOR ANY AND ALL DAMAGES WHICH MIGHT BE CAUSED BY HIS FAILURE TO EXACTLY LOCATE AND PRESERVE ANY AND ALL UNDERGROUND UTILITIES.

NO.	REVISION	DATE

REVIEW:

PREPARED UNDER MY DIRECT SUPERVISION FOR AND ON BEHALF OF CLASSIC CONSULTING ENGINEERS AND SURVEYORS, LLC

COLORADO LICENSED KYLE RAYE CAMPBELL 29794 PROFESSIONAL ENGINEER

KYLE R. CAMPBELL, COLORADO P.E. #29794 — 8-9-24 DATE

CLASSIC CONSULTING
619 N. Cascade Avenue, Suite 200
Colorado Springs, Colorado 80903
(719)785-0790
(719)785-0799(Fax)

STERLING RANCH EAST FILING NO. 2
CONSTRUCTION PLANS
PUBLIC STREET IMPROVEMENT PLAN
STREET LIGHT POLE LOCATION

DESIGNED BY	JDP	SCALE		DATE	8/8/24
DRAWN BY	JDP	(H) 1"= 50'		SHEET 13	OF 15
CHECKED BY	KRC	(V) 1"= N/A		JOB NO.	1183.31

EPC 9/23/2024

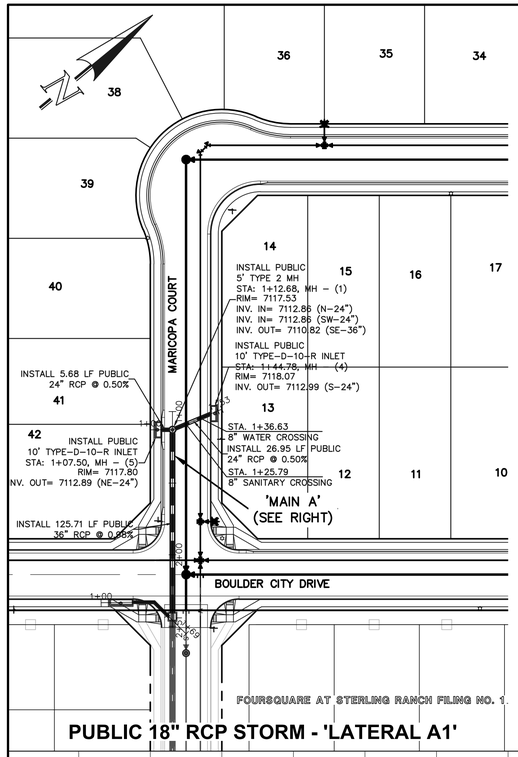

PUBLIC 18" RCP STORM - 'LATERAL A1'

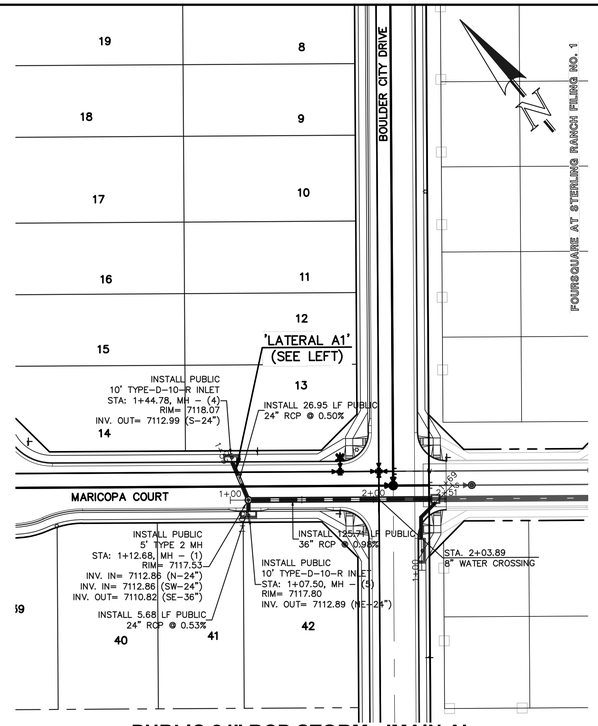

PUBLIC 24" RCP STORM - 'MAIN A'

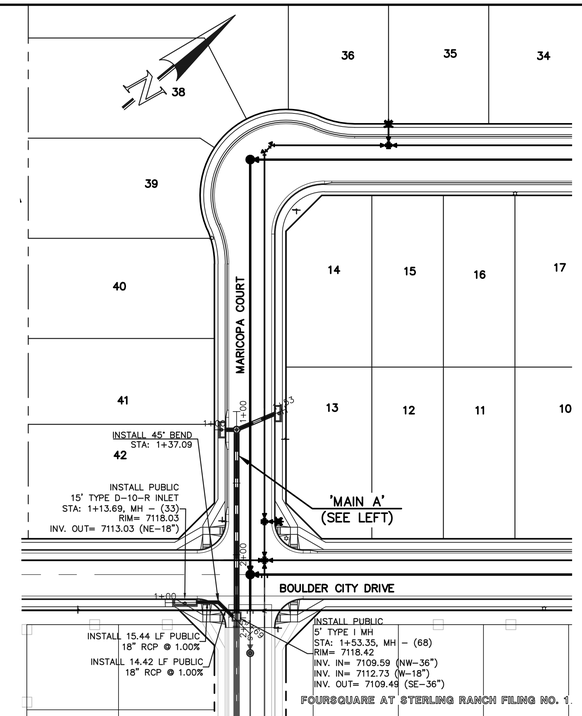

PUBLIC 18" RCP STORM - 'LATERAL A2'

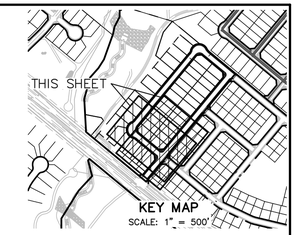

NOTES:

ALL STORM FACILITIES WITHIN R.O.W. ARE PUBLIC, UNLESS OTHERWISE NOTED.

ALL STORM SEWER WITH 100–YR HGL ABOVE THE TOP OF PIPE SHALL BE INSTALLED WITH PRESSURE PIPE AND WATERTIGHT JOINTS WITH A 100–YEAR SERVICE LIFE.

ALL STORM SEWER PIPES TO BE CLASS 3.

STORM MANHOLE AND INLET DETAILS ARE LOCATED ON SHEET 15.

50 25 0 50 100

SCALE: 1" = 50'

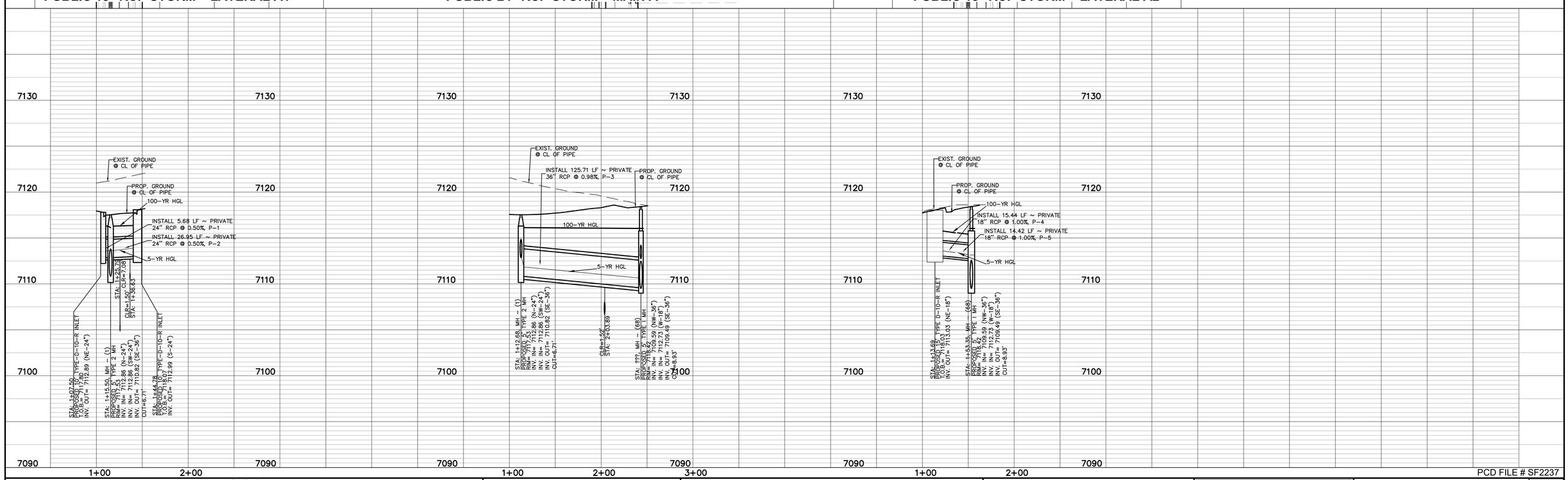

PCD FILE # SF2237

LEGEND

PROPOSED FIRE HYDRANT	EXISTING FIRE HYDRANT
PROPOSED WATER MAIN	EXISTING WATER MAIN
PROPOSED SANITARY SEWER MAIN	EXISTING SANITARY SEWER MAIN
PROPOSED STORM SEWER	EXISTING STORM SEWER
PROPOSED STORM INLET	EXISTING STORM INLET
ROW/BOUNDARY LINE	EXISTING GAS MAIN
	EXISTING ELECTRIC

48 HOURS BEFORE YOU DIG, CALL UTILITY LOCATORS

811

UTILITY NOTIFICATION CENTER OF COLORADO
IT'S THE LAW

THE LOCATIONS OF EXISTING UNDERGROUND UTILITIES ARE SHOWN IN AN APPROXIMATE WAY ONLY. THE CONTRACTOR SHALL DETERMINE THE EXACT LOCATION OF ALL EXISTING UTILITIES BEFORE COMMENCING WORK. THE CONTRACTOR SHALL BE FULLY RESPONSIBLE FOR ANY AND ALL DAMAGES WHICH MIGHT BE CAUSED BY HIS FAILURE TO EXACTLY LOCATE AND PRESERVE ANY AND ALL UNDERGROUND UTILITIES.

NO.	REVISION	DATE

REVIEW:

PREPARED UNDER MY DIRECT SUPERVISION FOR AND ON BEHALF OF CLASSIC CONSULTING ENGINEERS AND SURVEYORS, LLC

COLORADO LICENSED KYLE R. CAMPBELL 29794 PROFESSIONAL ENGINEER

KYLE R. CAMPBELL, COLORADO #29794 — 8-9-24 DATE

CLASSIC CONSULTING

619 N. Cascade Avenue, Suite 200
Colorado Springs, Colorado 80903
(719)785-0790
(719)785-0799(Fax)

STERLING RANCH EAST FILING NO. 2
CONSTRUCTION PLANS
PUBLIC STORM SEWER PLAN
"MAIN A" STA: 1+00 – STA:

DESIGNED BY	JDP	SCALE		DATE	8/8/24
DRAWN BY	JDP	(H) 1"=	50'	SHEET 14	OF 15
CHECKED BY	KRC	(V) 1"=	5'	JOB NO.	1183.31

EPC 9/23/2024

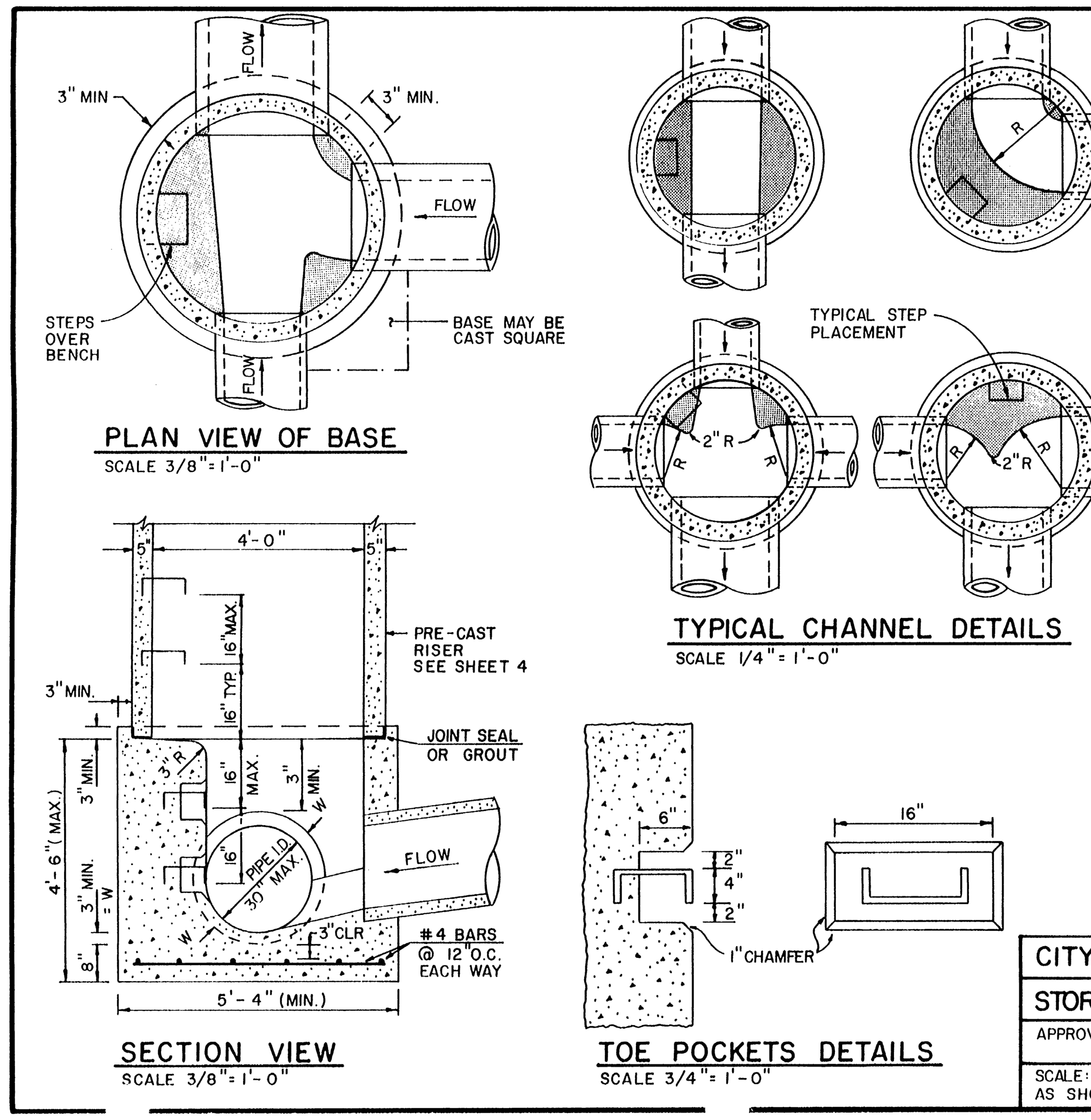

NOTES

1. Type II manholes shall be used only with approval of the City Engineer and only when the pipe sizes are 30" or less inside diameter.
2. View and Details are typical. Design Engineer shall determine manhole base configuration and dimensions for particular pipe sizes and alignment.
3. Either ladder or steps shall be installed when manhole depth exceeds 30". Steps in base shall be installed in "toe pockets" (see detail this sheet). Lowest step shall be a maximum of 16" above the floor.
4. Pipes shall be trimmed to final shape and set before manhole is poured.
5. Bench shall be sloped toward center of manhole base (4:1 max., 1/2" per ft. min.).
6. Floor of manhole shall be trowelled to a smooth, hard surface and shall slope towards the outlet (8:1 max., 1/2" per ft. min.). Floor shall be shaped and channelled; see details this sheet.

CITY OF COLORADO SPRINGS
STORM SEWER MANHOLE-TYPE II
APPROVED BY Gary R. Haynes, CITY ENGINEER
SCALE: AS SHOWN | DATE: JAN. 89 | DRAWN: P.L.B. | SHEET: D-20 B OF 4

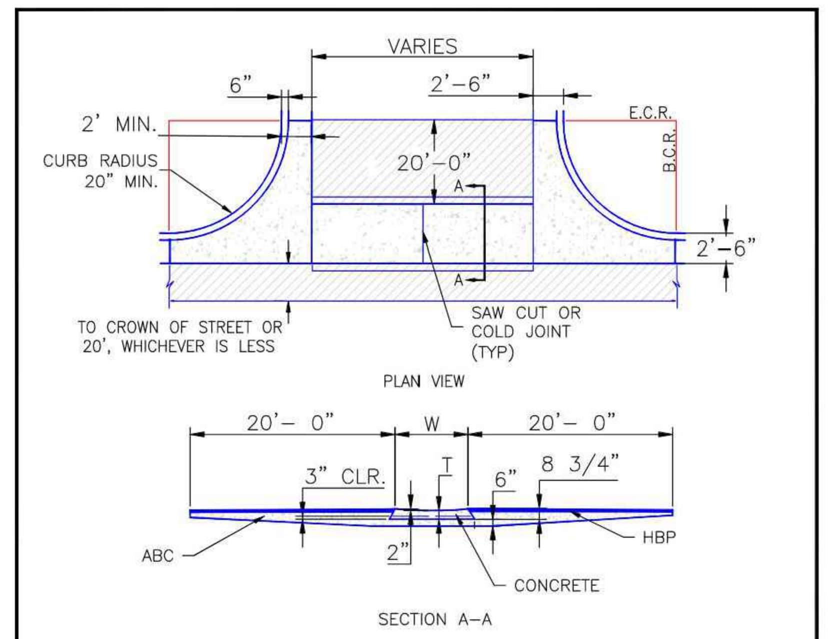

NOTES

1. W – WIDTH SHALL BE 6' FOR LOCAL, 8' FOR COLLECTORS, AND 10' FOR ARTERIAL ROADS.
2. T – SQUARED-OFF RETURN TO BE POURED MONOLITHICALLY, 8" PCC FOR LOCAL ROADS, 9" FOR COLLECTORS WITH 6x6 – 4.4 W.W.F. OR #4 REINFORCING BAR @ 18" EACH WAY.
3. [hatched box] = 3" MINIMUM ASPHALT DEPTH (2 LIFTS).
4. DESIGN TO SPECIFY ELEVATIONS AT PI AND PCR.

SCALE: NOT TO SCALE

8/11/11 DATE APPROVED:
André P. Brackin DEPARTMENT OF TRANSPORTATION
Typical Cross Pan Layout Detail Standard Drawing
REVISION DATE: 12/8/15 | FILE NAME: SD_2-26
EL PASO COUNTY DEPARTMENT OF TRANSPORTATION

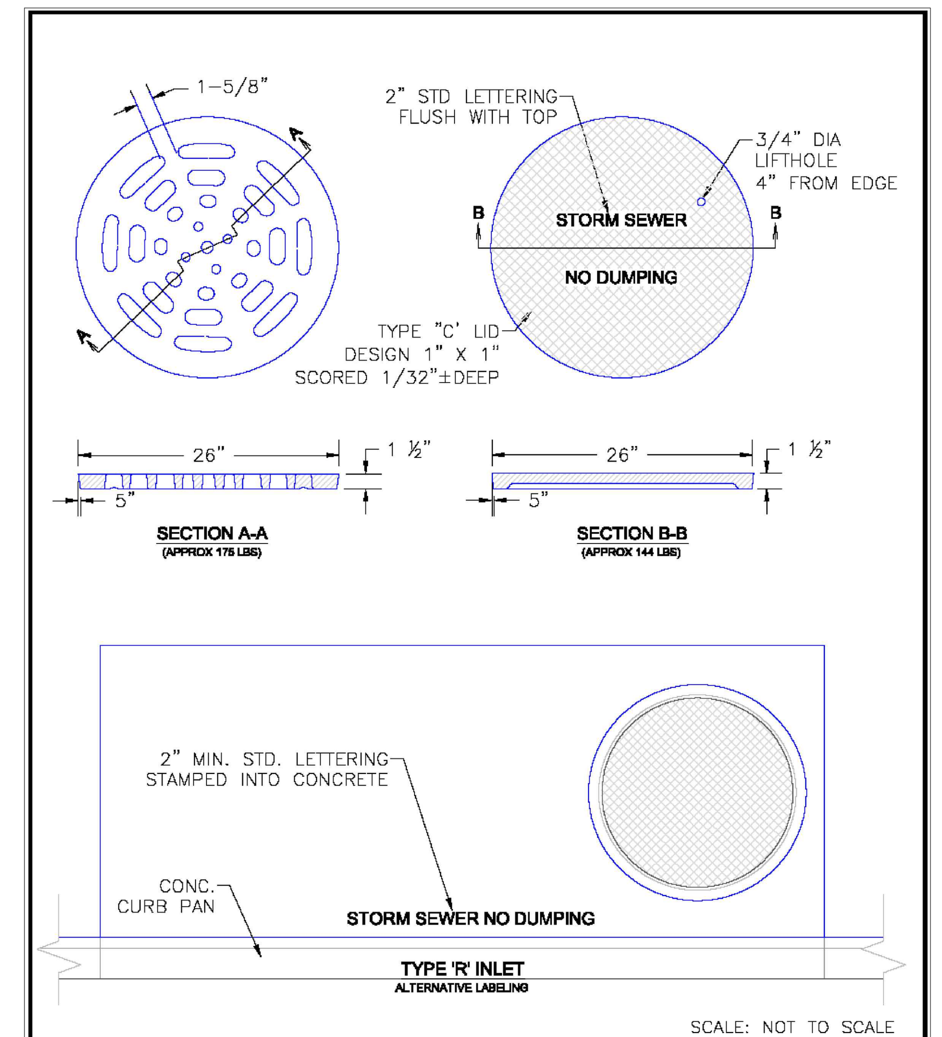

SCALE: NOT TO SCALE

9/16/10 DATE APPROVED:
André P. Brackin DEPARTMENT OF TRANSPORTATION
Storm Sewer Manhole Details Standard Drawing
REVISION DATE: 9/16/10 | FILE NAME: SD_3-5
EL PASO COUNTY DEPARTMENT OF TRANSPORTATION

TABLE ONE ~ BAR LIST FOR CURB INLETS, TYPE "R"

MARK	DIA IN.	O.C. SPACING	TYPE	ALL INLETS L= → 5' NO.REQ'D.	LENGTH	INLETS. H ≤ 5' 10' NO.REQ'D.	LENGTH	15' NO.REQ'D.	LENGTH	INLETS, H > 5' 10' NO.REQ'D.	LENGTH	15' NO.REQ'D.	LENGTH
401	↑	11"	II	15	*	21	*	26	*	11	*	11	*
402		11"	II	7	*	13	*	18	*	7	*	7	*
403		9"	II	*	4'–10"	*	4'–0"	*	4'–0"	*	4'–0"	*	4'–10"
405		6"	VI	11	6'–10"	21	6'–10"	31	6'–10"	11	6'–10"	11	6'–10
406		6"	VIII	7	8'–10"	7	13'–10"	7	18'–10"	7	8'–10"	7	8'–10"
407	1/2"	9"	II	*	5'–10"	*	10'–10	*	15'–10"	*	5'–10"	*	5'–10"
408		12"	II	3	6'–10"	3	11'–0"	3	16'–0"	3	11'–0"	3	16'–0"
409		8"	II	6	5'–10"	6	10'–10"	6	15'–10"	6	10'–10"	6	15'–10"
410		11"	VII							3		3	*
411		11"	II							3	5'–2"	3	10'–2"
412		11"	II							3	2'–9"	3	2'–9"
413	↓	9"	II							7	10'–10"	7	15'–10"
501	↑	5 1/2"	IV	11	3'–4"	22	3'–4"	33	3'–4"	22	3'–4"	33	3'–4"
502	5/8"	5 1/2"	III							11	11'–5"	17	11'–5"
503		5 1/2"	II	5	3'–6"	16	3'–6"	27	3'–6"	6	3'–6"	6	3'–6"
504	↓	5 1/2"	IX									5	8'–4"
	3/4"												
601		2 1/2"	V	2	8'–10"	2	8'–10"	2	8'–10"	2	8'–10"	4	8'–10"
ø8[8.5				1	5'–10"	1	10'–10"	1	15'–10"	1	10'–10"	1	15'–10"
				2BARS,1ROD	——	4BARS,3RODS	——	8BARS,5RODS	——	4BARS,3RODS	——	8BARS,5RODS	——

REGULAR INLETS (10' and 15', H ≤ 5') — DROP BOX INLETS (10' and 15', H > 5')

* VARIABLE, REFER TO TABLE TWO.
ø INCLUDE 18" NO. 4 BARS (SEE CHANNEL LAYOUT DETAIL).
▼ SEE CURB FACE ASSEMBLY ON SHEET 1 AND CHANNEL LAYOUT DETAILS ON THIS SHEET.

TABLE TWO ~ BARS AND QUANTITIES VARIABLE WITH "H"

'H'	LENGTH 401	402	410	NO. REQ'D. REGULAR 403	407	NO. REQ'D. DROP BOX 403	407	L=5' CU.YD.CONC.	LB.STEEL	L=10' CU.YD.CONC.	LB.STEEL	L=15' CU.YD.CONC.	LB.STEEL
3'–0"	2'–8"	1'–8"		10	7			3.2	285	5.3	497	7.4	706
3'–6"	3'–2"	2'–2"		10	7			3.4	305	5.7	528	7.9	747
4'–0"	3'–8"	2'–8"		12	9			3.7	326	6.0	559	8.4	786
4'–6"	4'–2"	3'–2"		12	9			3.9	334	6.4	571	8.8	803
5'–0"	4'–8"	3'–8"		14	11			4.1	354	6.7	602	9.3	844
5'–6"	5'–2"	4'–2"	3'–5"	16	13	15	6	4.4	375	6.0	607	7.4	850
6'–0"	5'–8"	4'–8"	3'–11"	16	13	16	6	4.6	382	6.2	616	7.6	860
6'–6"	6'–2"	5'–2"	4'–5"	18	15	18	8	4.8	402	6.4	637	7.8	880
7'–0"	6'–8"	5'–8"	4'–11"	20	17	19	10	5.0	423	6.6	654	8.0	897
7'–6"	7'–2"	6'–2"	5'–5"	20	17	20	10	5.3	430	6.9	664	8.3	907
8'–0"	7'–8"	6'–8"	5'–11"	22	19	22	12	5.5	451	7.1	684	8.5	927
8'–6"	8'–2"	7'–2"	6'–5"	24	21	23	14	5.7	471	7.3	702	8.7	944
9'–0"	8'–8"	7'–8"	6'–11"	24	21	24	14	6.0	479	7.6	711	9.0	954
9'–6"	9'–2"	8'–2"	7'–5"	26	23	26	16	6.2	499	7.8	732	9.2	974
10'–0"	9'–8"	8'–8"	7'–11"	28	25	27	18	6.4	520	8.0	749	9.4	992
10'–6"	10'–2"	9'–2"	8'–5"	28	25	28	18	6.7	527	8.3	759	9.7	1001
11'–0"	10'–8"	9'–8"	8'–11"	30	27	30	20	6.9	547	8.5	779	9.9	1022

NOTE: FOR L=5', L=10' AND L=15' REGULAR INLETS: TOTAL QUANTITIES NEEDED ARE OUTSIDE OF THE HEAVY BLACK LINE. DROP BOX INLETS: TOTAL QUANTITIES NEEDED ARE INSIDE OF THE HEAVY BLACK LINE

STEEL WEIGHTS DO NOT INCLUDE STRUCTURAL STEEL.

GENERAL NOTES

1. ALL CONCRETE SHALL BE CLASS B.
2. CONCRETE WALLS SHALL BE FORMED ON BOTH SIDES AND SHALL BE 8 IN. THICK.
3. INLET STEPS SHALL BE IN ACCORDANCE WITH AASHTO M 199.
4. CURB FACE ASSEMBLY SHALL BE GALVANIZED AFTER WELDING.
5. EXPOSED CONCRETE CORNERS SHALL BE CHAMFERED 3/4 IN. CURB AND GUTTER CORNERS SHALL BE FINISHED TO MATCH THE EXISTING CURB AND GUTTER BEYOND THE TRANSITION GUTTER.
6. REINFORCING BARS SHALL BE DEFORMED AND SHALL HAVE A 2 IN. MINIMUM CLEARANCE. ALL REINFORCING BARS SHALL BE EPOXY COATED.
7. DIMENSIONS AND WEIGHTS OF TYPICAL MANHOLE RING AND COVER ARE NOMINAL.
8. MATERIAL FOR MANHOLE RINGS AND COVERS SHALL BE GRAY OR DUCTILE CAST IRON CONFORMING TO 712.06.
9. SINCE PIPE ENTRIES INTO THE INLET ARE VARIABLE, THE DIMENSIONS SHOWN ARE TYPICAL. ACTUAL DIMENSIONS AND QUANTITIES FOR CONCRETE AND REINFORCEMENT SHALL BE AS REQUIRED IN THE WORK. QUANTITIES INCLUDE VOLUMES OCCUPIED BY PIPES.
10. STRUCTURAL STEEL SHALL BE GALVANIZED AND SHALL CONFORM TO THE REQUIREMENTS OF 712.06.

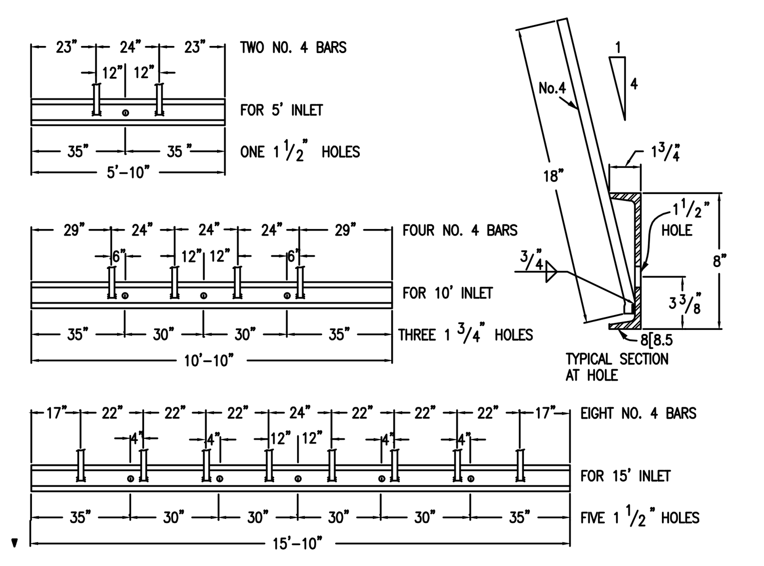

CHANNEL LAYOUT DETAILS

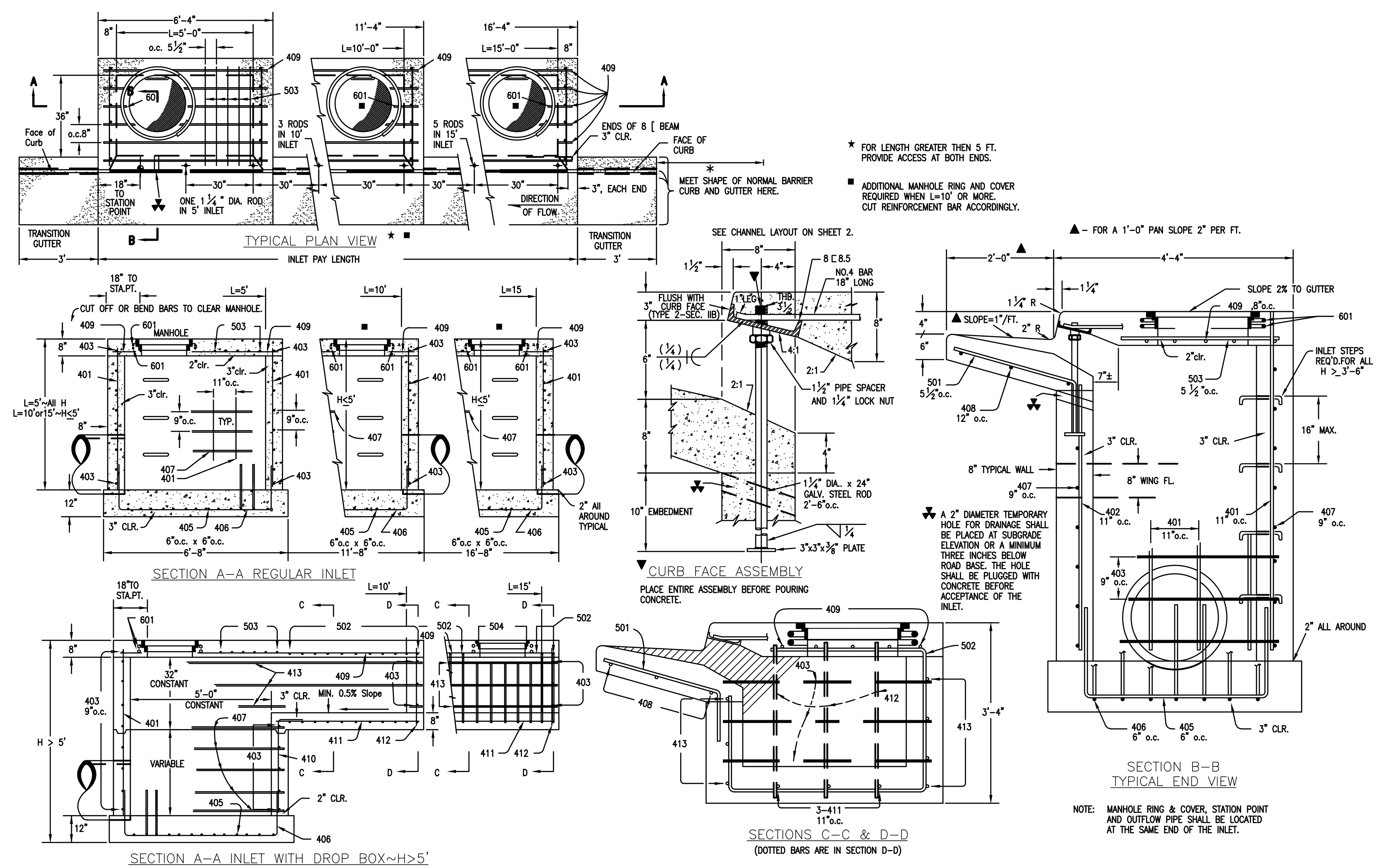

CDOT TYPE R INLET
STD. PLAN NO: M-604-12

PCD FILE # SF2237

48 HOURS BEFORE YOU DIG, CALL UTILITY LOCATORS
811
UTILITY NOTIFICATION CENTER OF COLORADO
IT'S THE LAW

THE LOCATIONS OF EXISTING UNDERGROUND UTILITIES ARE SHOWN IN AN APPROXIMATE WAY ONLY. THE CONTRACTOR SHALL DETERMINE THE EXACT LOCATION OF ALL EXISTING UTILITIES BEFORE COMMENCING WORK. THE CONTRACTOR SHALL BE FULLY RESPONSIBLE FOR ANY AND ALL DAMAGES WHICH MIGHT BE CAUSED BY HIS FAILURE TO EXACTLY LOCATE AND PRESERVE ANY AND ALL UNDERGROUND UTILITIES.

NO.	REVISION	DATE

REVIEW:
PREPARED UNDER MY DIRECT SUPERVISION FOR AND ON BEHALF OF CLASSIC CONSULTING ENGINEERS AND SURVEYORS, LLC
COLORADO LICENSED PROFESSIONAL ENGINEER KYLE RAYE CAMPBELL 29794
KYLE R. CAMPBELL, COLORADO P.E. #29794 — 8-9-24 DATE

CLASSIC CONSULTING
619 N. Cascade Avenue, Suite 200, Colorado Springs, Colorado 80903
(719)785-0790 (719)785-0799(Fax)

STERLING RANCH EAST FILING NO. 2
CONSTRUCTION PLANS
DETAIL SHEET

DESIGNED BY	JDP	SCALE	DATE 8/8/24
DRAWN BY	JDP	(H) 1"= N/A	SHEET 15 OF 15
CHECKED BY	KRC	(V) 1"= N/A	JOB NO. 1183.31

EPC 9/23/2024

N:\118331\DRAWINGS\CONSTRUCTION\Storm\12-118331-STM-02-Details.dwg, 8/8/2024 2:56:07 PM, 1:1
I:\118331\DRAWINGS\CONSTRUCTION\STORM\12-118331-STM-02-DETAILS.DWG PRINTED BY: MWHORTON 8.08.24 @ 2:56 PM LAST SAVED BY: JPASSANISE