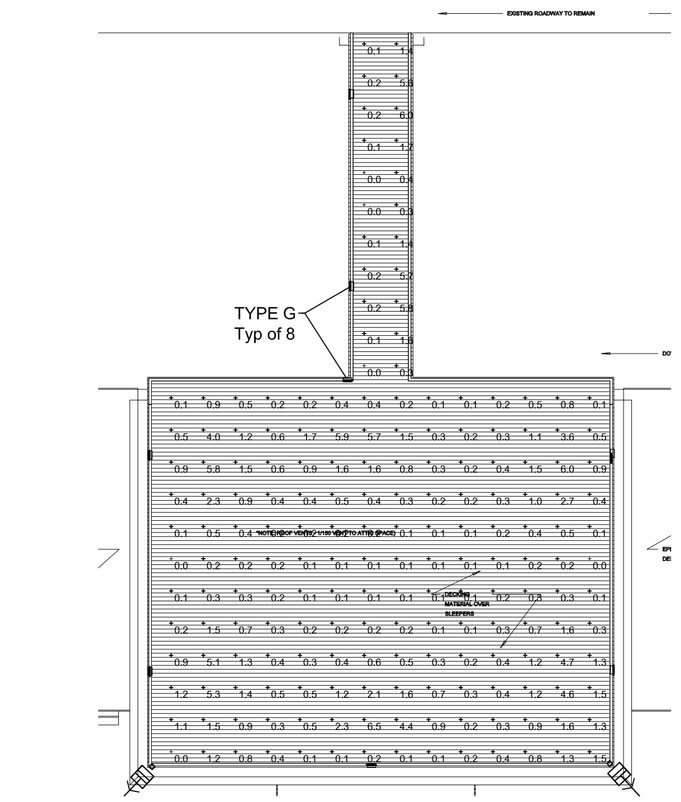

NORTH

UPPER DECK PLAN - LIGHTING POINT-CALCS

NO SCALE

Previous comment not addressed: please indicate height of all proposed light poles.

TYPE D

PRESCOLITE LC6SL, 1000 LM, 4000K
LED, FULL CUT-OFF, 8-INCH DOWN LIGHT

RECESSED, WET-LOCATION

TYPE F1

LITHONIA RSXF1 LED WIDE FLOOD
CUT-OFF VISOR TO LIMIT SPILL LIGHT
10,600 LUMENS, 4000K

POLE MTD TO ILLUMINATE BEACH AREA

TYPE E

LITHONIA DSCF2 - LED
SMALL LED FLOOD LIGHT, 6800 LUMENS, 4000K

SURFACE MTD TO POSTS ON UPPER DECK

TYPE F2

LITHONIA RSXF2 LED FLOOD
CUT-OFF VISOR TO LIMIT SPILL LIGHT
24,900 LUMENS, 4000K

POLE MTD LIGHT FOR VOLLEY BALL COURT

TYPE G

LITESTEP SLLED2, LED STEP LIGHT
FULL CUT-OFF, 130 LUMENS, 4000K

SURFACE MTD ON UPPER DECK

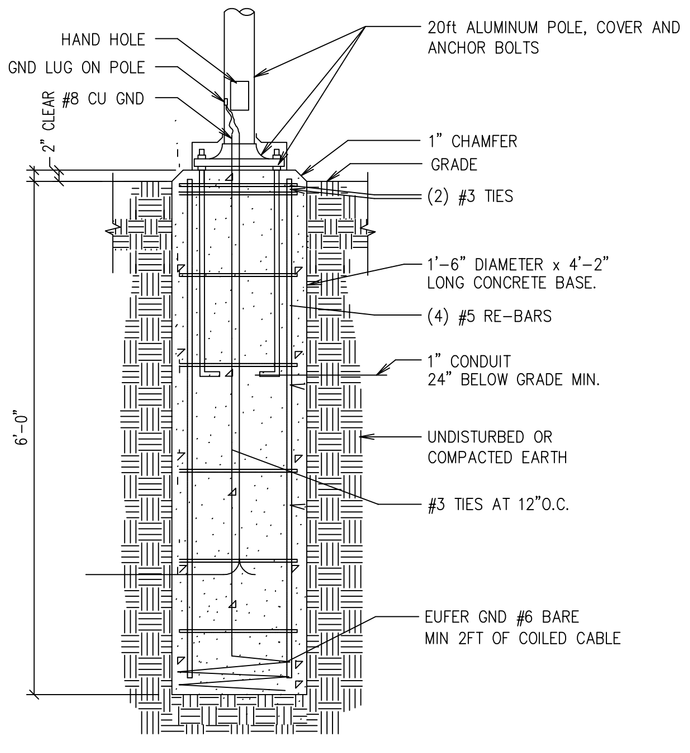

TYPE F1 & F2 - POLE BASE DETAIL

NO SCALE

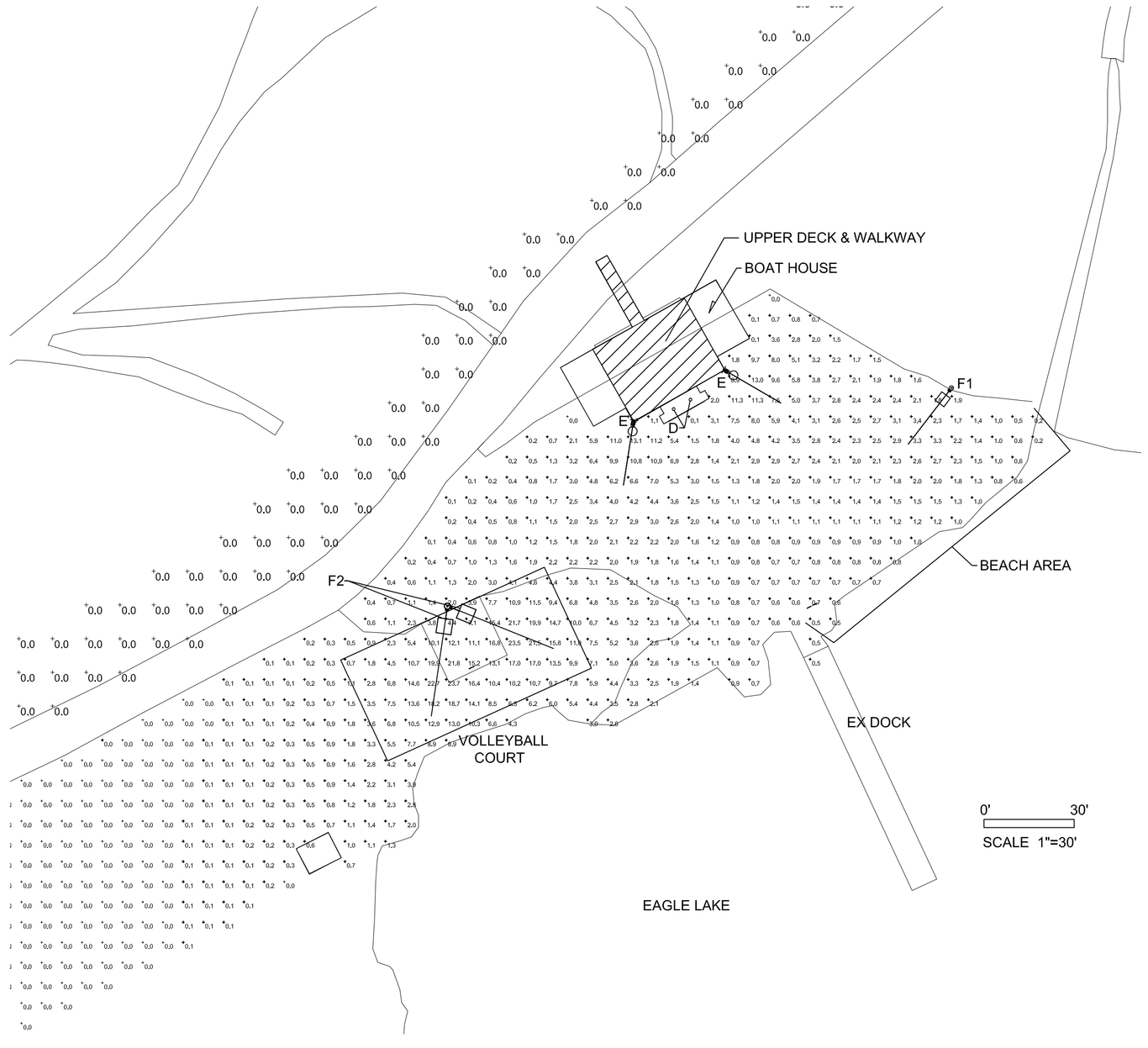

NORTH

PLAN - SITE LIGHTING POINT-CALCULATIONS

SCALE: 1:30

HB&A Architecture AND Planning
102 E. Moreno Avenue
Colorado Springs, CO 80903
719.473.7063
www.hbaa.com

RED ROCK CONSULTING ENGINEERS

Eagle Lake Camp

6935 Rampart Range Rd
Cascade, CO 80905

COLORADO REGISTERED PROFESSIONAL ENGINEER 28627 02/25/20 EAGLE LAKE CAMPS BOAT HOUSE DEVELOPMENT PLAN

issue / revision	date:
Development Plan	MAR 30, 2020

job #	149-107
drawn	Author CAD
chkd	Checker JBT

DEVELOPMENT PLAN ELECTRICAL

E-001