ENTECH
ENGINEERING, INC.
505 ELKTON DRIVE
COLORADO SPRINGS, CO 80907
PHONE (719) 531-5599

SOILS AND GEOLOGY STUDY
MONUMENT RIDGE EAST – FILING NO. 1
MONUMENT HILL ROAD AND PALMER DIVIDE ROAD
EL PASO COUNTY, COLORADO

Prepared for:

Monument Ridge East, LLC
101 North Cascade Ave, Suite 10
Colorado Springs, Colorado 80903

Attn: Norbie Larsen

March 7, 2023
Revised August 7, 2024
Revised July 16, 2026

Respectfully Submitted,

ENTECH ENGINEERING, INC.

Logan L. Langford, P.G.
Sr. Geologist

Reviewed by:

COLORADO LICENSED
JOSEPH COLLIN GOODE
23725
PROFESSIONAL ENGINEER

Digitally signed by Joseph C Goode Jr.
Date: 07/16/26

Joseph C. Goode Jr., P.E.
President

LLL/JG

PCD No. SF2514

Table of Contents

1 SUMMARY ***1***

2 GENERAL SITE CONDITIONS AND PROJECT DESCRIPTION ***2***

3 SCOPE OF THE REPORT ***2***

4 FIELD INVESTIGATION ***3***

5 SOIL, GEOLOGY, AND ENGINEERING GEOLOGY ***4***

5.1 General Geology 4

5.2 Soil Conservation Survey 4

5.3 Site Stratigraphy 5

5.4 Soil Conditions 5

5.5 Groundwater 6

6 ENGINEERING GEOLOGY – IDENTIFICATION AND MITIGATION OF GEOLOGIC HAZARDS ***8***

6.1 Relevance of Geologic Conditions to Land Use Planning 12

7 ECONOMIC MINERAL RESOURCES ***13***

8 EROSION CONTROL ***14***

9 ROADWAY, EMBANKMENT, AND STORMWATER FACILITY CONSTRUCTION RECOMMENDATIONS ***15***

10 CLOSURE ***17***

11 REFERENCES ***18***

FIGURES
Figure 1: Vicinity Map
Figure 1: Vicinity Map
Figure 2: USGS Map
Figure 3: Site Plan/Test Boring Location Map
Figure 4: Cut/Fill Exhibit
Figure 5: Soil Survey Map
Figure 6: Elsmere Quadrangle Geology Map
Figure 7: Geology/Engineering Geology Map
Figure 8: Active Sewer Underdrain
Figure 9: Floodplain Map
Figure 10: Wetlands Map
Figure 11: Typical Perimeter Drain Detail
Figure 12: Underslab Drainage Layer (Capillary Break)
Figure 13: Interceptor Drain Detail

APPENDIX A: Site Photographs
APPENDIX B: Summary of Laboratory Test Results and Test Boring Logs, Entech Job No. 212536
APPENDIX C: Temporary Piezometers, Test Boring Logs and Summary of Laboratory Test Results
APPENDIX D: Soil Survey Descriptions
APPENDIX E: Entech Response Letter to Colorado Geological Survey Review dated June 13, 2024

1 SUMMARY

Project Location

The project lies in portions of the SW¼ of Section 36, Township 11 South, Range 67 West of the 6th Principal Meridian in El Paso County, Colorado. The site is southeast of the town of Monument, Colorado, located east of the intersection of Struthers Road and Spanish Bit Drive. The location of the site is as shown on the Vicinity Map, Figure 1.

Project Description

Total acreage involved in the project is approximately 63 acres. Filing No. 1 consists of 35 single family lots, tracts, and other associated site improvements. Tracts 1 and 2 will be developed in future filings. The development will be serviced by Woodmoor Water and Sanitation District.

Scope of Report

This report presents the results of our geologic evaluation and treatment of engineering geologic hazard study. The report has been revised to address Colorado Geological Survey review comments and reflect the latest development plans (Reference 2). The response letter is included in Appendix E of this report.

Land Use and Engineering Geology

This site was found to be suitable for the proposed development. Areas were encountered where the geologic conditions will impose minor constraints on development and land use. These include areas of potentially collapsible soils, potentially expansive soils, wetlands, and shallow groundwater areas. Based on the proposed development plan, it appears that these areas will have minor constraints on the development. These conditions and mitigation will be discussed in greater detail in the report.

In general, it is our opinion that the development can be achieved if the observed geologic conditions on site are either avoided or properly mitigated. All recommendations are subject to the limitations discussed in the report.

2 GENERAL SITE CONDITIONS AND PROJECT DESCRIPTION

The site is in portions of the W½ of Section 2, Township 11 South, Range 67 West of the 6th Principal Meridian in El Paso County, Colorado. The site is located at the southeast corner of Monument Hill Road and Palmer Divide East just north of Monument, Colorado. The location of the site is as shown on the Vicinity Map, Figure 1.

The topography of the site is generally gradually to moderately sloping to the east, west, and north along a drainage through the central portion of the site. Portions of the delineated wetlands indicated on Figure 3 were wet, however, flowing water was not observed. Several minor drainage swales were observed across the site. The drainages onsite flow in a northerly direction. The site is currently mostly undeveloped with an old farm house and barn located in the central portion of the site. Misty Acres Boulevard extends into the site and is partially paved. The site boundaries are indicated on the USGS Map, Figure 2. Previous land uses have included agricultural grazing and pasture land. The site contains primarily field grasses, weeds, scrub oak, and ponderosa pines. Site photographs, taken February 28, 2023, are included in Appendix A, and approximate locations are indicated on Figure 3.

Total acreage involved in the proposed development is approximately 63 acres. Filing No. 1 consists of 35 single family lots, tracts, and other associated site improvements. Tracts 1 and 2 will be developed in future filings. Preliminary plans indicate significant grading will be performed to develop the site. An existing Woodmoor Water and Sanitation sewer main is located in the central and northern portions of the site. Proposed grading is shown on Figure 3, and the Cut/Fill Exhibit is presented on Figure 4. Significant cuts up to 20 feet or more are proposed across the site with the drainage area in the central portion of the site to be filled. Detention ponds and storm water drainage improvements are proposed across the site.

3 SCOPE OF THE REPORT

The scope of the report includes a general geologic analysis utilizing published geologic data. Detailed site-specific mapping was be conducted to obtain general information in respect to major geographic and geologic features, geologic descriptions and their effects on the development of the property.

4 FIELD INVESTIGATION

Our field investigation consisted of the preparation of a geologic map of any bedrock features and significant surficial deposits. The Natural Resource Conservation Service (NRCS), previously the Soil Conservation Service (SCS) survey was also reviewed to evaluate the site. The position of mappable units within the subject property are shown on the Geologic Map. Our mapping procedures involved both field reconnaissance, measurements and air photo reconnaissance and interpretation. The same mapping procedures have also been utilized to produce the Engineering Geology Map which identified pertinent geologic conditions affecting development. The field mapping was performed by personnel of Entech Engineering, Inc. on February 28, 2023.

Ten (10) test borings were performed on the site to determine general soil and bedrock characteristics. The locations of the test borings are indicated on the Site and Exploration Plan, Figure 3. The Test Boring Logs are presented in Appendix B. Results of this testing will be discussed later in this report.

Four (4) additional test borings were performed and temporary piezometers installed on July 29, 2024. The piezometers, designated P1 through P4 were installed in areas of proposed cuts, and where shallow groundwater conditions were previously encountered. The Test Boring Logs and Summary of Laboratory Testing for the Piezometers are presented in Appendix C, and locations indicated on the Site and Exploration Plan, Figure 3.

Soil and bedrock samples were obtained from the borings utilizing the Standard Penetration Test (ASTM D1586) using a split-barrel California sampler. Results of the Standard Penetration Test (SPT) are included on the boring logs in terms of N-values expressed in blows per foot (bpf). Soil and bedrock samples recovered from the borings were visually classified and recorded on the boring logs. The soil and bedrock classifications were later verified utilizing laboratory testing and grouped by soil type. The soil and bedrock type numbers are included on the boring logs. It should be understood that the soil and bedrock descriptions shown on the boring logs may vary between boring location and sample depths. It should also be noted that the lines of stratigraphic separation shown on the boring logs represent approximate boundaries between soil and bedrock types and the actual stratigraphic transitions may be more gradual or variable with location.

Water content testing (ASTM D2216) was performed on the samples recovered from the borings, and the results are shown on the boring logs. Grain-Size Analysis (ASTM D422) and Atterberg Limits testing (ASTM D4318) were performed on selected samples to assist in classifying the

materials encountered in the borings. Volume change testing was performed on selected samples using Swell/Collapse Testing (ASTM D4546) in order to evaluate potential expansion characteristics of the soil and bedrock. Soluble sulfate testing was performed on select soil samples to evaluate the potential for below-grade degradation of concrete due to sulfate attack. A Summary of Laboratory Test Results is included in Appendix B.

5 SOIL, GEOLOGY, AND ENGINEERING GEOLOGY

5.1 General Geology

Physiographically, the site lies in the western portion of the Great Plains Physiographic Province. Approximately 3 miles to the west is a major structural feature known as the Rampart Range Fault. This fault marks the boundary between the Great Plains Physiographic Province and the Southern Rocky Mountain Province. The site exists within the southeastern edge of a large structural feature known as the Denver Basin. Bedrock in the area tends to be very gently dipping in a northeasterly direction (Reference 3). The rocks in the area of the site are sedimentary in nature and typically Upper Cretaceous in age. The bedrock underlying the site consists of the Pierre Shale Formation. Overlying this formation are unconsolidated deposits of artificial fill deposits, residual soils, sheetwash and alluvial soils of Quaternary Age. The site's stratigraphy will be discussed in more detail in Section 5.3.

5.2 Soil Conservation Survey

The Natural Resource Conservation Service (Reference 4), previously the Soil Conservation Service (Reference 5) has mapped one soil types on the site Figure 4. In general, the soils are classified as sandy loams. The soils are described as follows:

Soil Type	Description
1	Alamosa Loam, 1 to 3% slopes
69	Peyton-Pring Complex, 8 to 15% slopes
92	Tomah-Crowfoot Loamy Sands, 3 to 8% slopes

Complete descriptions of each soil type are presented in Appendix C. The soils have generally been described to have rapid to moderate permeabilities. Possible hazards with soil erosion are present on the site. The erosion potential can be controlled with vegetation. The soils have been described to have moderate erosion hazards.

5.3 Site Stratigraphy

The Greenland and Monument Quadrangles Geology Map showing the site is presented in (Figure 5, References 6 and 7). The Geology/Engineering Geology Map prepared for the site is presented in Figure 6. Three mappable units were identified on this site which are described as follows:

Qaf **Artificial Fill of Holocene Age:** These are man-made fill deposits associated with a minor fill areas observed on the site, and along the existing Woodmoor Water and Sanitation sewer main through the central portion of the site.

Qau **Alluvium Undivided of Holocene and Pleistocene Age:** These are alluvial filled valley heads consisting of sheetwash, and stream-deposited alluvium. Typically consisting of poorly sorted sand and fine gravel.

Qc/Tkd **Colluvium of Quaternary Age overlying Dawson Arkose of Tertiary to Cretaceous Age:** These materials consist of silty to clayey sands, cobbles and boulders deposited by the action of sheetwash and gravity. Some alluvial soils deposited by water and residual soil from in-situ weathering exist in this mapping. These soils are overlying the Dawson Formation. The Dawson Formation typically consists of coarse-grained, arkosic sandstone with interbedded lenses of fine-grained sandstone, siltstone and claystone.

The soils listed above were mapped from site-specific mapping, the *Geologic Maps of the Greenland and Monument Quadrangles* distributed by the Colorado Geological Survey in 2003 (References 6 and 7), the *Geologic Map of the Colorado Springs-Castle Rock Area*, distributed by the US Geological Survey in 1979 (Reference 8), and the *Geologic Map of the Denver* $1^0 \times 2^0$ *Quadrangle*, distributed by the US Geological Survey in 1981 (Reference 9). The Test Borings were also used in evaluating the site and are included in Appendix B. The Geology Map prepared for the site is presented in Figure 6.

5.4 Soil Conditions

Two soil types and one bedrock types were observed during drilling which consisted of Type 1: native silty to clean to very silty sand (SM, SW), Type 2: native very clayey sand (SC), and Type 3: silty to clayey sandstone (SM, SC). The topsoil was relatively thin on the site. Each soil type was classified in accordance with the Unified Soil Classification System (USCS) using the laboratory testing results and the observations made during drilling.

Soil Type 1 classified as clean to silty to very silty sand (SM, SW). The sand was encountered in 8 of the 10 test borings directly beneath the topsoil extending to depths of 4 feet below ground surface (bgs) to termination of boring at 20 feet below ground surface (bgs). Standard Penetration Testing on the sand resulted in N-values of 11 to 49 bpf, indicating medium dense to very dense states. Sulfate testing resulted in less than 0.01 percent soluble sulfate by weight, indicating a negligible potential for below grade concrete degradation due to sulfate attack.

Soil Type 2 classified as native very clayey sand (SC). The clayey sand was encountered in two of the test borings (Test Boring Nos. 3 and 4) at depths from the ground surface and extending to 7 to 9 feet and again from 13 to depth drilled (20 feet) in Test Boring No. 4. Standard Penetration Testing on the clayey sand resulted in an N-values of 6 to 38 bpf indicating loose to dense states. A Swell/Consolidation test resulted in a volume change of 2.8%, indicating a moderate to high expansion potential. Sulfate testing resulted in less than 0.01 percent soluble sulfate by weight, indicating a negligible potential for below grade concrete degradation due to sulfate attack.

Soil Type 3 classified as a silty to clayey sandstone bedrock. The sandstone was encountered in four of the test borings at depths of 4 to 19 feet and extended to termination of borings at 20 feet. Standard Penetration Testing on the clayey to silty sandstone resulted in N-values of greater than 50 bpf indicating very dense states. The sandstone is anticipated to have low expansion potential. Sulfate Testing resulted in less than 0.01 percent soluble sulfate by weight, indicating a negligible potential for below grade degradation due to sulfate attack.

Additional soil descriptions are presented on the enclosed drill logs. A Summary of Laboratory Test Results and the Test Boring Logs are presented in Appendix B. The soils were classified using the results of the laboratory testing, the Unified Soil Classification System (USCS), and visual classification. The soil types are expected to vary across the site. Also, stratification lines shown on the logs represent the approximate boundary between soil types and the actual transition are expected to be gradual and vary with location.

5.5 Groundwater

Groundwater was encountered in Test Boring Nos. 1 – 4 at depths ranging from 1 to 10 feet which were drilled to depths of 20 feet. Fluctuation in groundwater conditions may occur due to variations in rainfall and other factors not readily apparent at this time. Wetlands, areas of seasonally shallow and potentially seasonal shallow groundwater were observed on the site and further discussed in the following sections.

Four (4) temporary piezometers designated P1 through P4 were installed in areas of proposed cuts, and where shallow groundwater conditions were previously encountered. The piezometers will be measured periodically to obtain seasonal groundwater fluctuations across the site. Groundwater was encountered in the piezometers at depths of 6 to 16.2 feet. The readings taken for the piezometers are shown on the table below, and will continued to be monitored in the coming seasons and during the development process. Where the proposed cut depths approach or are at and/or exceeding current groundwater levels, dewatering in addition to stabilization may be required. Specific stabilization recommendations are discussed in Section 9.

Shallow groundwater conditions were encountered along or near existing drainages or low-lying areas, and the pond in the northern portion of the site. Drainages on the site generally flow in a northerly direction. Areas along and near the drainages and wetlands on the site have been mapped as psw – potential seasonally shallow groundwater, or sw – seasonally shallow groundwater areas and are shown on the Geology/Engineering Geology Map, Figure 7.

Piezometer, and Total Depth (ft.)	Ground-water Level (ft.) 8/2/24	Ground-water Level (ft.) 8/6/24	Ground-water Level (ft.) 9/16/24	Ground-water Level (ft.) 3/10/25	Ground-water Level (ft.) 6/30/25	Ground-water Level (ft.) 2/6/26	Ground-water Level (ft.) 4/20/26	Approx. Cut/Fill
P1, 20’	16.2	14.4	15.5	15.1	13.5	16.2	16.0	10 – 16
P2, 20’	8.7	8.6	9.3	8.3	6.2	9.6	9.2	0 – 3
P3, 15’	6	6	6.3	6.2	5.5	6.2	6.1	6 – 10
P4, 15’	8.2	8.2	8.5	8.1	7.1	7.6	8.1	4 – 8

Add Note: Any semi-permanent flowing underdrain systems are subject to state well permitting.

It should be noted that in the sandy materials on site, some groundwater conditions might be encountered due to the variability in the soil profile. Isolated sand and gravel layers within the soils, sometimes only a few feet in thickness and width, can carry water in the subsurface. Groundwater may also flow on top of the underlying bedrock. Builders and planners should be cognizant of the potential for the occurrence of such subsurface water features during construction on-site and deal with each individual problem as necessary at the time of construction.

Due to the shallow groundwater levels across the project site and areas where proposed grade exceeds or encroaches the groundwater level an underdrain system will be installed to develop the site as planned. The underdrain system should be designed have a gravity discharge to a daylight outfall, and include individual connections for the individual lot foundation drains. The collected groundwater must be discharged appropriately. Typical utility underdrain details are included in Figure 8.

6 ENGINEERING GEOLOGY – IDENTIFICATION AND MITIGATION OF GEOLOGIC HAZARDS

Detailed mapping has been performed on this site to produce an Engineering Geology Map Figure 7. This map shows the location of various geologic conditions of which the developers should be cognizant during the planning, design and construction stages of the project. Constraints/Hazards include areas of artificial fill, potentially expansive soils, shallow groundwater, seasonally wet, potentially seasonally wet, and potential areas of shallow bedrock. These hazards and the recommended mitigation techniques are as follows:

Artificial Fill – Constraint

Fill was not encountered in the test borings, however, minor areas of fill were observed on the site, and fill associated with the existing sewer main located through the central portion of the site. Additionally, other areas of artificial fill may be encountered in areas other than those mapped. The fill and fill piles are considered uncontrolled for construction purposes.

Mitigation: It is anticipated the minor areas of fill will be removed prior to construction during site grading. Any uncontrolled fill encountered beneath foundations or retaining walls will require removal and recompaction at a minimum of 95% of its maximum Standard Proctor Dry Density, ASTM D-698. Fill place at depths greater than 10 feet will require 100% of its maximum Standard Proctor Dry Density, ASTM D-698. Any organic material or mulch should be removed prior to placing controlled fill.

Expansive Soils – Constraint

Expansive soils are common in the area, and were encountered in the test borings drilled on site. Swells ranged from low to moderate in the soils tested. The clay and claystone, if encountered beneath foundations, can cause differential movement in the structure foundation. These occurrences should be identified and dealt with on an individual basis or possibly mitigated during site grading.

Mitigation Should expansive soils be encountered beneath the foundation; mitigation will be necessary. Mitigation of expansive soils will require special foundation design. Overexcavation and replacement with non-expansive soils at a minimum of 95 percent of its maximum Modified Proctor Dry Density, ASTM D-1557 is a suitable mitigation, which is common in the area. Floor slabs on expansive soils should be expected to experience movement. Overexcavation and replacement has been successful in minimizing slab movements. Overexcavation depths of 4 to

6 feet are anticipated for the site. Mitigation may also include moisture conditioning and recompaction of the clay soils.

Drilled piers are another option that is used in areas where highly expansive soils are encountered. Typical minimum pier depths are on the order of 25 feet or more and require penetration into the bedrock material a minimum of 4 to 6 feet, depending upon building loads. Final recommendations should be determined after additional investigation of the lots.

Areas of Erosion – Constraint

Due to the nature of the soils on this site, virtually all the soils are subject to erosion by wind and water. Areas of erosion can occur across the entire site, particularly if the soils are disturbed during construction. Vegetation reduces the potential for erosion. The areas identified where erosion is actually taking place may require check dams, regrading and revegetation using channel lining mats to anchor vegetation. Further recommendations for erosion control are discussed under Section 8.0 "Erosion Control" of this report. Recommendations pertaining to revegetation may require input from a qualified landscape architect and/or the Natural Resource Conservation Service (previously Soil Conservation Service).

Floodplain and Drainage Areas – Constraint

A drainage is located in the central portion of the site which flows in a northerly direction. The site is not mapped within any floodplain zones according to the FEMA Map Nos. 08041CO065G and 08041CO276G, dated December 7, 2018 (Figure 9, Reference 10). Wet areas were observed in the northern and northwester portions of the site along the drainage in the delineated wetland potentially seasonal shallow groundwater were would anticipate the potential for periodically high ve potential. These are low-lying areas along the ss the site. Perched water conditions could be er can flow within permeable sand layers overlying ter conditions are encountered, the mitigation seasonal shallow groundwater should be followed. Foundations should maintain a minimum separation of 3 feet between the foundation grade and the maximum anticipated groundwater level. If groundwater is within 3 feet additional drainage systems (underslab, interceptor) will be required. These areas are further discussed below.

Unresolved:
When will groundwater be determined for construction? Will testing be done prior to construction, early grading, or during construction? If groundwater is encountered within 5 vertical feet of public ROW or drainage facilities, additional reports and testing will be required to address shallow groundwater. (See ECM C.6.1)

The seasonally shallow groundwater and potentially seasonal shallow groundwater areas located on the site are shown on the Geology Map, Figure 7. Portions of these areas mapped with these

hazards have been identified in the National Wetland Inventory as Freshwater Emergent Wetland habitats classified as PEM1C (Palustrine – P, Emergent – EM, Persistent – 1, Seasonally Flooded – C), Freshwater Forested/Shrub Wetland habitat classified as PSS1C (Palustrine – P, Scrub-Shrub – SS, Broad-Leaved Deciduous – 1), and Riverine habitat classified as R4SBC (Riverine – R, Intermittent – 4, Streambed – SB, Seasonally Flooded – C), (Figure 10, Reference 11). The jurisdictional and non-jurisdictional wetlands were previously delineated by WBS (Reference 12), and USACE Jurisdictional Determination letter (Reference 13) are included in Appendix E.

The PEM1C and PSS1C wetland areas in the central drainage through the site and the northwestern portion of the site will be regraded with cuts and fill proposed. The delineated jurisdictional wetland areas within Tract A and C in the northern portion of the site will be avoided by the proposed grading. The non-jurisdictional wetland areas to be filled along the future extension of Misty Acres Boulevard and proposed Lots 6 through 23. Cuts in these areas are primarily for the proposed detention pond locations.

sw, psw – Seasonal and Potentially Seasonal shallow groundwater areas: In these areas, we would anticipate the potential for periodically high subsurface moisture conditions, frost heave potential, and highly organic soils. Areas where perched water conditions are encountered should also follow these recommendations. Construction proposed in or adjacent to these areas, should follow these precautions:

w – Areas of ponded water/wetlands: These are areas where water could potentially pool in low-lying areas of the drainages. According to the development plan the mapped wetlands in these areas are within designated as open space. Any areas of ponded water to be filled or regraded should have all soft organic soils removed prior to fill placement.

Mitigation: In these locations, foundations are subject to severe frost heave and should penetrate to a sufficient depth so as to prevent the formation of ice lenses beneath foundations. At this location and elevation, a foundation depth for frost protection of 30-inches is recommended. In areas where high subsurface moisture conditions are anticipated periodically, a subsurface perimeter drain will be necessary to help prevent the seepage of water into areas below grade. A typical perimeter drain detail is presented in Figure 8. Any grading in these areas should be done in a manner that directs surface flow around construction to avoid areas of ponded water. Areas of organic material will require removal prior to any fill placement. Unstable soil conditions should be expected in areas of shallow groundwater. Where foundations approach the groundwater level, stabilization

of the excavations utilizing shot rock may be necessary. Underslab drains or capillary breaks, and interceptor drains may be necessary to prevent intrusion of water into areas below grade. Typical drain details are presented in Figures 11 through 13.

Proposed grading is shown on Figure 3, and the Cut/Fill Exhibit is presented on Figure 4. Significant cuts up to 20 feet or more are proposed in a few areas of the site with the drainage area in the central portion of the site to be filled. Seven detention ponds and storm water drainage improvements are proposed across the site. Additional investigation once grading and utility installation has been completed to evaluate the groundwater levels is recommended. Temporary dewatering during construction will likely be required. All organic matter and soft, wet soils should be completely removed before filling.

Radon – Hazard

Radon is a colorless, tasteless radioactive gas with a United States Environmental Protection Agency (EPA) specified action level of 4.0 picocuries per liter (pCi/L) of air. Radon gas has a very short half-life of 3.8 days. Radon levels for the area have been reported by the Colorado Geologic Survey in the open file, Report No. 91-4 (Reference 13). Average Radon levels for the 80921-zip code is 1.90 pCi/l. The following is a table of radon levels in this area:

Average Radon Levels for the 80921 Zip Code	
0 < 4 pCi/L	100.00%
4 < 10 pCi/L	0.00%
10 < 20 pCi/L	0.00%
> 20 pCi/L	0.00%

Mitigation:

The potential for high radon levels is present for the site. Build-up of radon gas can usually be mitigated by providing increased ventilation of basement and crawlspace and sealing joints. **Specific requirements for mitigation should be based on site specific testing.**

Shallow Bedrock – Constraint

Bedrock was encountered five of the ten test borings at depths ranging from 4 to 19 feet. A Summary of the Depth to Bedrock is included in Table 1. Shallow bedrock will be encountered in some areas of this site, particularly those mapped as Qc/Tkd: colluvial soils overlying the Dawson Formation. Where shallow claystone, sandstone, and siltstone are encountered,

excavation/grading may be difficult requiring track-mounted excavators. Bedrock may be encountered cuts for roadways and utility excavations.

6.1 Relevance of Geologic Conditions to Land Use Planning

Total acreage involved in the project is approximately 63 acres. Filing No. 1 consists of 35 single family lots, tracts, and other associated site improvements. It is our opinion that the existing geologic and engineering geologic conditions will impose some constraints on the proposed development and construction. The most significant problems affecting development will be those associated with the artificial fill, potentially expansive soils, shallow groundwater, seasonally wet, potentially seasonally wet, and potential areas of shallow bedrock on-site that can be satisfactorily mitigated through proper engineering design and construction practices. Basement and crawlspace construction is anticipated for the site.

The upper materials are typically at loose to medium states and firm to very stiff consistencies. Expansive soils were encountered in some of the test borings that will require mitigation. Loose soils if encountered at foundation depth will require recompaction. Foundations anticipated for the site are standard spread footings in conjunction with overexcavation in areas of expansive soils or loose soils. Excavation of the sand and clay soils is anticipated to be moderate with rubber-tired equipment. Excavation of claystone and shale may be difficult and require track-mounted equipment. Expansive soils will require special foundation design and/or overexcavation. These soils will not prohibit development.

Areas of fill exist on the site. These are areas associated minor areas of fill observed across the site, and fill associated with the existing sewer line. We would anticipate that the fill piles would be removed during site grading. Any uncontrolled fill encountered beneath foundations will require removal and recompaction at a minimum of 95% of its maximum Standard Proctor Dry Density, ASTM D-698. Fill placed at depths greater than 10 feet will require 100% of its maximum Standard Proctor Dry Density, ASTM D-698 (clay soils), and 98% of its maximum Modified Proctor Dry Density, ASTM D-1557 (granular soils). Any organic material or mulch should be removed prior to placing controlled fill.

A drainage is located in the central portion of the site which flows in a northerly direction. The site is not mapped within any floodplain zones according to the FEMA Map Nos. 08041CO065G and 08041CO276G, dated December 7, 2018 (Figure 9, Reference 10). Wet areas were observed in the northern and northwester portions of the site along the drainage in the delineated wetland areas. The jurisdictional and non-jurisdictional wetlands were previously delineated by WBS

(Reference 12), and USACE Jurisdictional Determination letter (Reference 13) are included in Appendix E. No construction or grading is proposed in the jurisdictional wetland areas.

Additionally, areas of seasonal and potentially seasonal shallow groundwater were observed across the site. In these areas, we would anticipate the potential for periodically high subsurface moisture conditions and frost heave potential. These are low-lying areas along the drainage and minor drainages across the site. Foundations should maintain a minimum separation of 3 feet between the foundation grade and the maximum anticipated groundwater level.

Proposed grading is shown on Figure 3, and the Cut/Fill Exhibit is presented on Figure 4. Significant cuts up to 20 feet or more are proposed in a few areas the site with the drainage area in the central portion of the site to be filled. Several detention ponds and significant drainage improvements area proposed as part of the development. Retaining walls are proposed in the southern and northern portions of the site varying in height from 0.5 to 16 feet. The retaining walls should be designed for the existing site conditions by a qualified professional engineer and be designed for internal and external global slope stability.

Continued monitoring of the piezometers, and additional investigation once grading and utility installation with underdrains has been completed to evaluate the groundwater levels is recommended.

These above constraints can be mitigated through proper design and construction or through avoidance. Additional subsurface soil investigation is recommended for each building site prior to construction. Observation and testing of overlot fill/grading is recommended.

7 ECONOMIC MINERAL RESOURCES

According to the *El Paso County Aggregate Resource Evaluation Map* (Reference 15), the area is not mapped with any aggregate deposits. According to the *Atlas of Sand, Gravel and Quarry Aggregate Resources, Colorado Front Range Counties* distributed by the Colorado Geological Survey (Reference 16), areas of the site are not mapped with any resources. According to the *Evaluation of Mineral and Mineral Fuel Potential* (Reference 17), the area of the site has been mapped as “Fair” for industrial minerals. However, considering the clayey silty nature of the soils, they would be considered to have little significance as an economic resource.

According to *the Evaluation of Mineral and Mineral Fuel Potential of El Paso County State Mineral Lands* (Reference 17), the site is mapped within the Denver Basin Coal Region. However, the

area of the site has been mapped as “Poor” for coal resources. No active or inactive mines have been mapped in the area of the site. No metallic mineral resources have been mapped on-site (Reference 17).

The site has been mapped as “Fair” for oil and gas resources (Reference 17). No oil or gas fields have been discovered in the area of the site. The sedimentary rocks in the area may lack the geologic structure for trapping oil or gas; therefore, it may not be considered a significant resource. Hydraulic fracturing is a new method that is being used to extract oil and gas from rocks. It utilizes pressurized fluid to extract oil and gas from rocks that would not normally be productive. The area of the site has not been explored to determine if the rocks underlying the site would be commercially viable utilizing hydraulic fracturing. The practice of hydraulic fracturing has come under review due to concerns about environmental impacts, health and safety.

8 EROSION CONTROL

The soil types observed on the site are mildly to highly susceptible to wind erosion, and moderately to highly susceptible to water erosion. A minor wind erosion and dust problem may be created for a short time during and immediately after construction. Should the problem be considered severe enough during this time, watering of the cut areas or the use of chemical palliative may be required to control dust. However, once construction has been completed and vegetation re-established, the potential for wind erosion should be considerably reduced.

With regard to water erosion, loosely compacted soils will be the most susceptible to water erosion, residually weathered soils become increasingly less susceptible to water erosion. For the typical soils observed on-site, allowable velocities or unvegetated and unlined earth channels would be on the order of 3 to 4 feet/second, depending upon the sediment load carried by the water. Permissible velocities may be increased through the use of vegetation to something on the order of 4 to 7 feet/second, depending upon the type of vegetation established. Should the anticipated velocities exceed these values, some form of channel lining material may be required to reduce erosion potential. These might consist of some of the synthetic channel lining materials on the market or conventional riprap. In cases where ditch-lining materials are still insufficient to control erosion, small check dams or sediment traps may be required. The check dams will serve to reduce flow velocities, as well as provide small traps for containing sediment. The determination of the amount, location and placement of ditch linings, check dams and of the special erosion control features should be performed by or in conjunction with the drainage engineer who is more familiar with the flow quantities and velocities.

Cut and fill slope areas will be subjected primarily to sheetwash and rill erosion. Unchecked rill erosion can eventually lead to concentrated flows of water and gully erosion. The best means to combat this type of erosion is, where possible, the adequate re-vegetation of cut and fill slopes. Cut and fill slopes having gradients more than three (3) horizontal to one (1) vertical become increasingly more difficult to revegetate successfully. Therefore, recommendations pertaining to the vegetation of the cut and fill slopes may require input from a qualified landscape architect and/or the Soil Conservation Service.

9 ROADWAY, EMBANKMENT, AND STORMWATER FACILITY CONSTRUCTION RECOMMENDATIONS

In general, the site soils are suitable for the proposed roadways and embankments. Groundwater may be encountered in deeper cuts and along drainages and low areas. If excavations encroach on the groundwater level unstable soil conditions may be encountered. Excavation of saturated soils may be difficult with rubber-tired equipment. Stabilization using shot rock or geogrids may be necessary.

Due to the shallow water conditions across the site, clay liners are recommended for the pond bottoms and side slopes to prevent groundwater from entering the pond facilities. Granular sodium bentonite mixed with native site soils that are properly compacted or the use is recommended. Geosynthetic Clay Liners (GCLs) are a suitable alternate lining option that could be considered.

Swell/Consolidation testing was conducted on the site subgrade soils which exhibited a swell of 2.8 percent. These results indicate that soil mitigation due to expansive soils may be required for the roadways. Overexcavation and cement-stabilization are suitable mitigation methods for the expansive soils in the roadways. Additional investigation for the proposed roadways will be required once site grading has been completed and utilities have been installed.

Any areas to receive fill should have all topsoil, organic material or debris removed. Prior to fill placement Entech should observe the subgrade. Fill must be properly benched and compacted to minimize potentially unstable conditions in slope areas. Fill slopes should be 3:1. The subgrade should be scarified and moisture conditioned to within 2 percent of optimum moisture content and compacted to a minimum of 95 percent of its maximum Modified Proctor Dry Density, ASTM D-1557, prior to placing new fill. Areas receiving fill may require stabilization with rock or fabric if shallow groundwater conditions are encountered.

New fill should be placed in thin lifts not to exceed 6 inches after compaction while maintaining at least 95 percent of its maximum Modified Proctor Dry Density, ASTM D-1557 for sandy soils, and clay soils should be compacted to a minimum of 95 percent of its maximum Standard Proctor Dry Density, ASTM D-698 at 0 to 4 percent of optimum moisture content. **Fill placed at depths greater than 10 feet will require 100% of its maximum Standard Proctor Dry Density, ASTM D-698 (clay soils), and 98% of its maximum Modified Proctor Dry Density, ASTM D-1557 (granular soils).** These materials should be placed at a moisture content conducive to compaction, usually 0 to ±2 percent of Proctor optimum moisture content. The placement and compaction of fill should be observed and tested by Entech during construction. Entech should approve any import materials prior to placing or hauling them to the site. Additional investigation will be required for pavement designs once roadway grading is completed and utilities are installed.

10 CLOSURE

It is our opinion that the existing geologic engineering and geologic conditions will impose some constraints on development and construction of the site. The majority of these conditions can be mitigated through proper engineering design and construction practices. The proposed development and use are consistent with anticipated geologic and engineering geologic conditions.

It should be noted that because of the nature of data obtained by random sampling of such variable and non-homogeneous materials as soil and rock, it is important that we be informed of any differences observed between surface and subsurface conditions encountered in construction and those assumed in the body of this report. Basement and crawlspace construction can be used on the site. Additional investigations for building sites will be required prior to construction. Construction and design personnel should be made familiar with the contents of this report. Reporting such discrepancies to Entech Engineering, Inc. soon after they are discovered would be greatly appreciated and could possibly help avoid construction and development problems.

This report has been prepared for Monument Ridge East, LLC for application to the proposed project in accordance with generally accepted geologic, and geotechnical engineering practices. No other warranty expressed or implied is made.

We trust that this report has provided you with all the information that you required. Should you require additional information, please do not hesitate to contact Entech Engineering, Inc.

11 REFERENCES

1. Entech Engineering, Inc. dated January 17, 2022. *Preliminary Subsurface Soil Investigation, Monument Ridge East, Monument Hill Road and Palmer Divide Road, Monument, Colorado.* Entech Job No. 212536.

2. Colorado Geological Survey, dated June 13, 2024. *Monument Ridge East, File No. SP241,* CGS Unique No. EP-24-0077.

3. Bryant, Bruce; McGrew, Laura W, and Wobus, Reinhard A. 1981. *Geologic Structure Map of the Denver 1° x 2° Quadrangle, North-Central Colorado*. Sheet 2. U.S. Geologic Survey. Map I-1163.

4. Natural Resource Conservation *Service,* September 23, 2016. *Web Soil Survey.* United States Department Agriculture, http://websoilsurvey.sc.egov.usda.gov/App/HomePage.htm.

5. United States Department of Agriculture Soil Conservation Service. June 1981. *Soil Survey of El Paso County Area, Colorado.*

6. Thorson, Jon P., 2003. *Geologic Map of the Greenland Quadrangle, Douglas and El Paso County, Colorado*. Colorado Geological Survey. Open-File Report 03-9.

7. Thorson, Jon P., and Madole, Richard F., 2003. *Geologic Map of the Monument Quadrangle, El Paso County, Colorado*. Colorado Geological Survey. Open-File Report 02-4.

8. Trimble, Donald E. and Machette, Michael N. 1979. *Geologic Map of the Colorado Springs-Castle Rock Area, Front Range Urban Corridor, Colorado*. USGS, Map I-857-F.

9. Bryant, Bruce; McGrew, Laura W. and Wobus, Reinhard A. 1981. *Geologic Map of the Denver 1º x 2º Quadrangle, North-Central Colorado*. U.S. Geologic Survey. Map 1-1163.

10. Federal Emergency Management Agency. December 7, 2018. *Flood Insurance Rate Maps for El Paso County, Colorado and Incorporated Areas.* Map Numbers 08041CO065G and 08041CO276G.

11. U.S. Fish & Wildlife Service, May 1, 2020. *National Wetlands Inventory*. Department of the Interior, fws.gov/wetlands/data/Mapper.html.

12. WSB, dated September 10, 2021, *Level 2 Wetland Delineation Report, Monument Ridge East Development, Woodmoor, El Paso County, Colorado.* WSB Project No. 18697.

13. Department of the Army Corps of Engineers, dated March 22, 2022, *Jurisdictional Determination – Action No. SPA-2005-00679.*

14. Colorado Geological Survey. 1991. *Results of the 1987-88 EPA Supported Radon Study in Colorado.* Open-file Report 91-4.

15. El Paso County Planning Development. December 1995. *El Paso County Aggregate Resource Evaluation Maps.*

16. Schwochow, S.D.; Shroba, R.R. and Wicklein, P.C. 1974. *Atlas of Sand, Gravel, and Quarry Aggregate Resources, Colorado Front Range Counties*. Colorado Geological Survey. Special Publication 5-B.

17. Keller, John W.; TerBest, Harry and Garrison, Rachel E. 2003. *Evaluation of Mineral and Mineral Fuel Potential of El Paso County State Mineral Lands Administered by the Colorado State Land Board*. Colorado Geological Survey. Open-File Report 03-07.

FIGURES

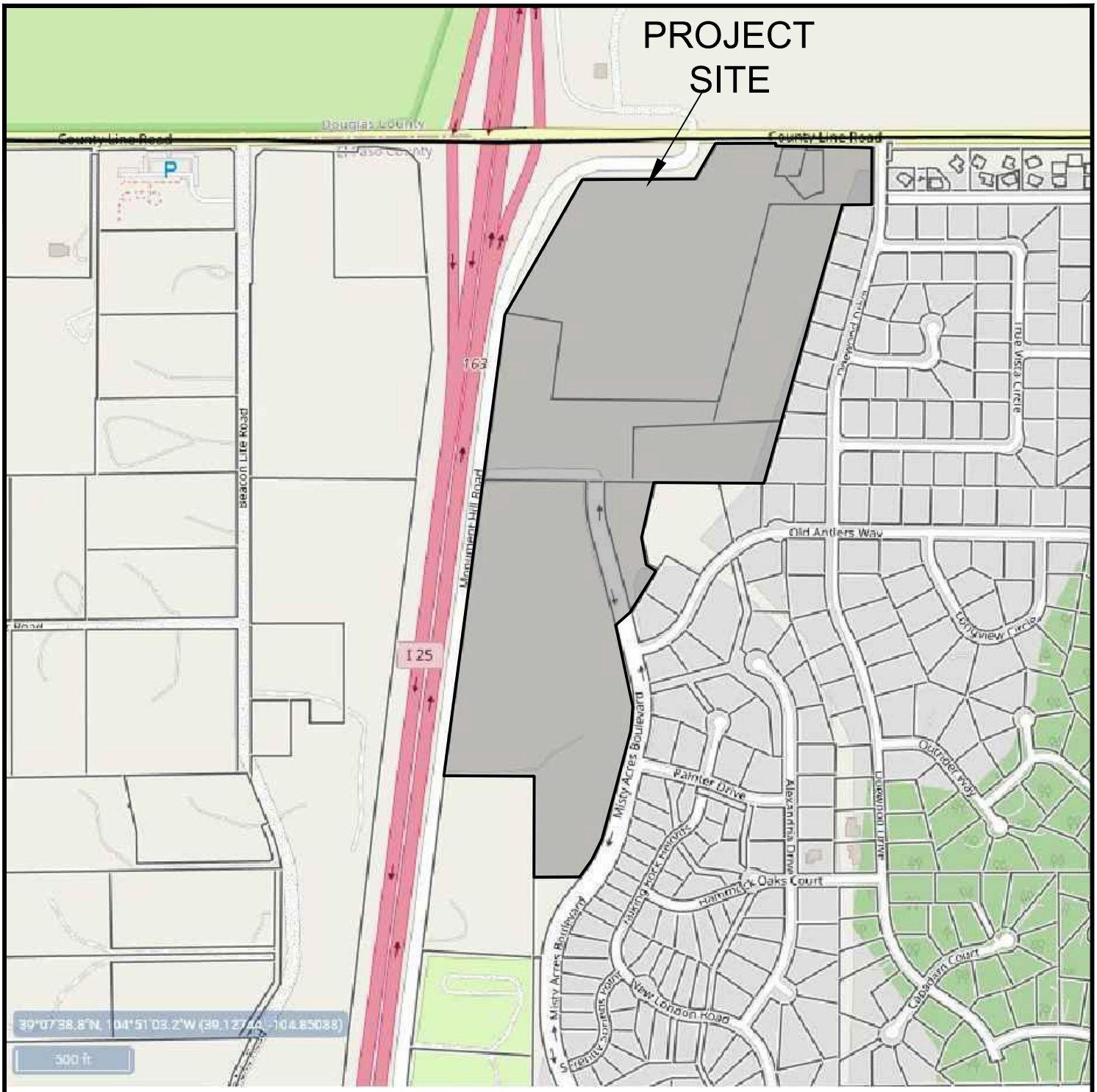

ENTECH ENGINEERING, INC.

VICINITY MAP

MONUMENT RIDGE EAST
MONUMENT RIDGE EAST, LLC

JOB NO.
230248

FIG. 1

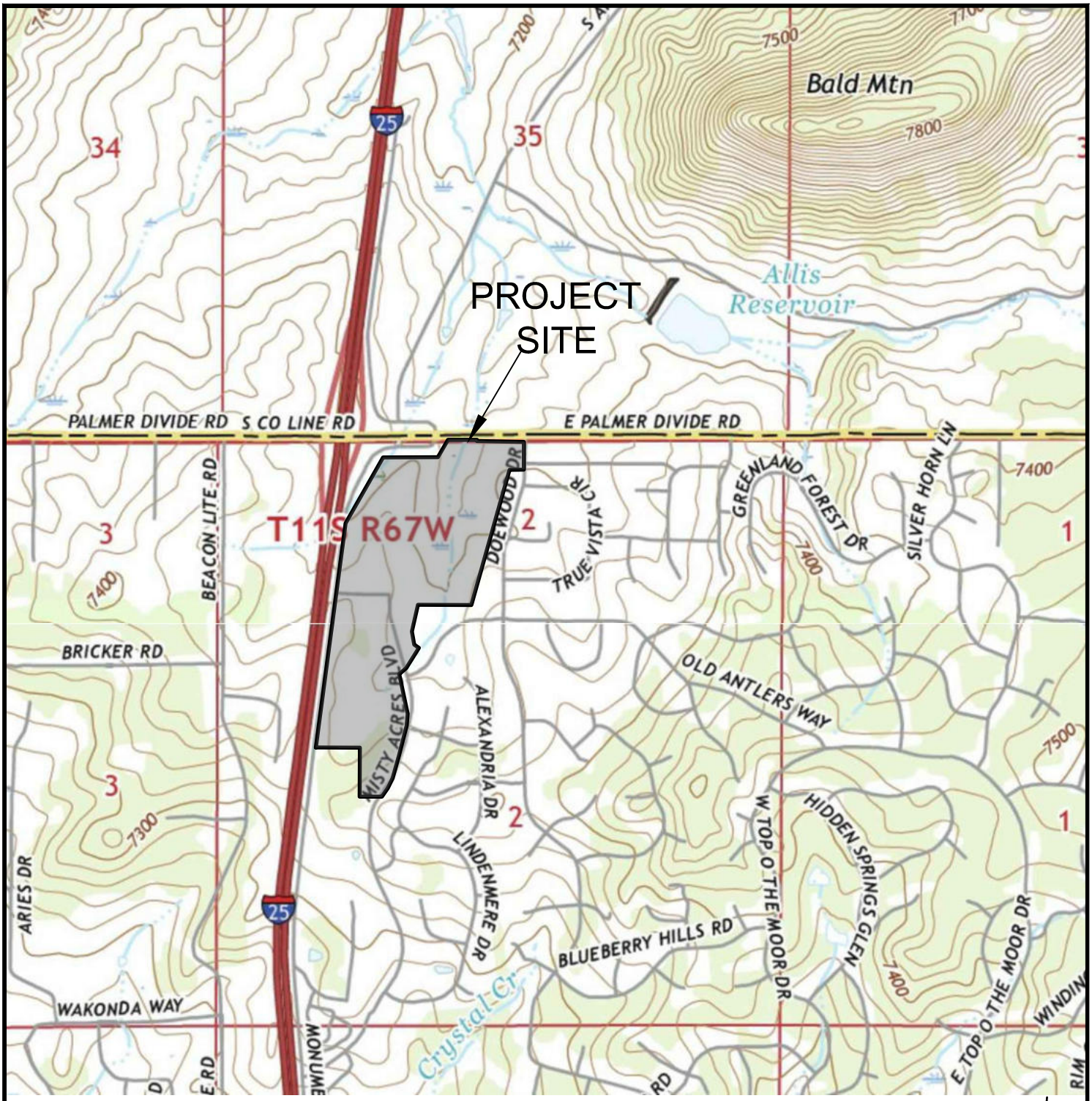

N

ENTECH ENGINEERING, INC.

USGS TOPOGRAPHY MAP

MONUMENT RIDGE EAST
MONUMENT RIDGE EAST, LLC

JOB NO.
230248

FIG. 2

MONUMENT RIDGE EAST

LOCATED IN THE NORTH ONE-HALF OF SECTION 2, T 11 S, R 67 W OF THE 6th P.M.
EL PASO COUNTY, COLORADO

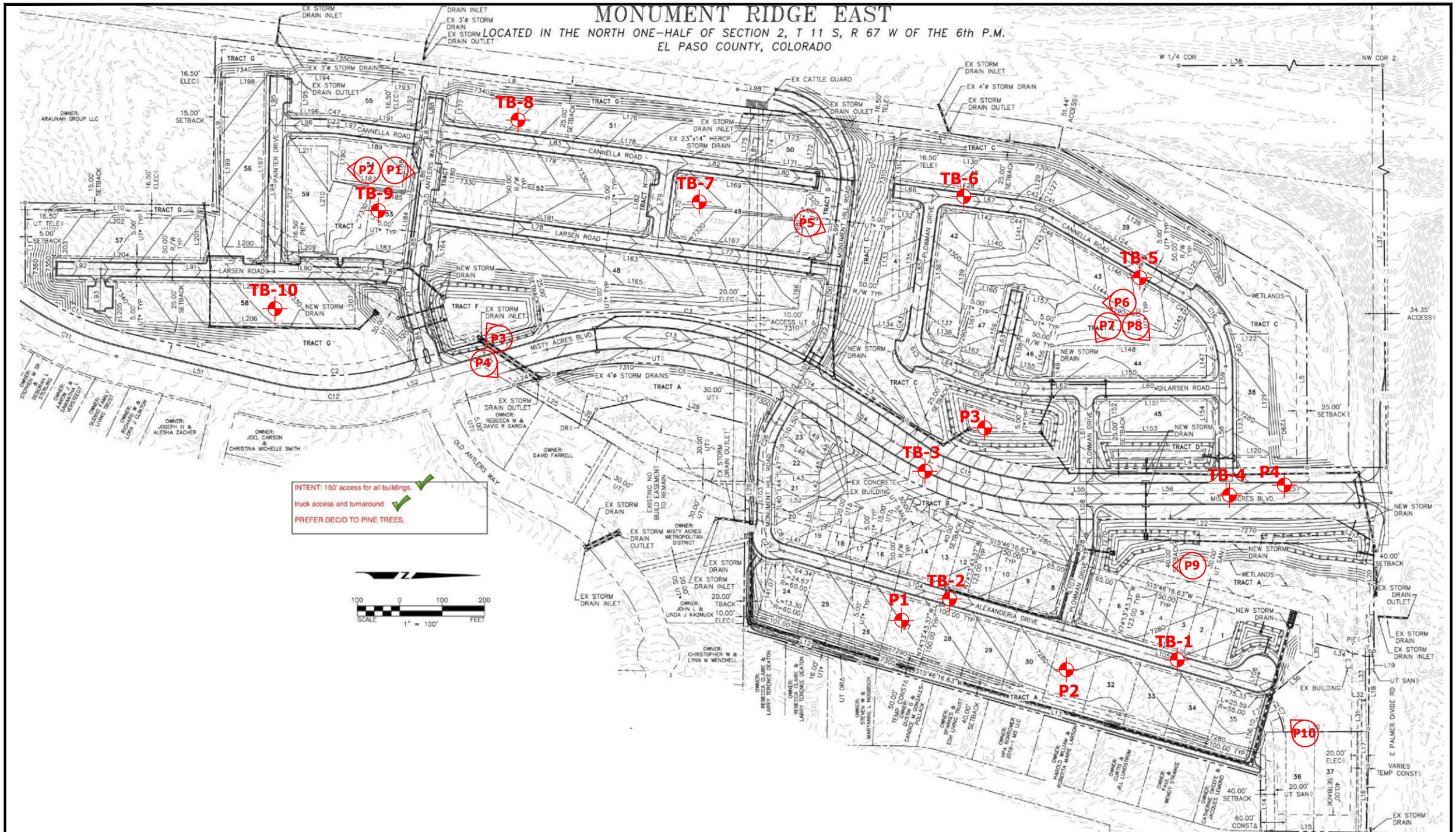

TB- APPROXIMATE TEST BORING LOCATION AND NUMBER

P2 - APPROXIMATE PHOTOGRAPH LOCATION AND NUMBER

ENTECH ENGINEERING, INC.

SITE AND EXPLORATION PLAN

MONUMENT RIDGE EAST
MONUMENT RIDGE EAST, LLC

JOB NO. 230248

FIG. 3

Cut/Fill Summary

Name	Cut Factor	Fill Factor	2d Area	Cut	Fill	Net
VOL - EC-01 vs PC-08	1.00	1.00	2541580.51 Sq. Ft.	435943.39 Cu. Yd.	162953.13 Cu. Yd.	272990.26 Cu. Yd.<Cut>
Totals			2541580.51 Sq. Ft.	435943.39 Cu. Yd.	162953.13 Cu. Yd.	272990.26 Cu. Yd.<Cut>

LEGEND

EXISTING	(E)
PROPOSED	(P)
PROPERTY BOUNDARY	
RIGHT-OF-WAY	
LOT LINE	

TB- APPROXIMATE TEST BORING LOCATION AND NUMBER

P- APPROXIMATE PIEZOMETER LOCATION AND NUMBER, GROUNDWATER DEPTH

ENTECH ENGINEERING, INC.

CUT/FILL EXHIBIT

MONUMENT RIDGE EAST
MONUMENT RIDGE EAST, LLC

JOB NO. 230248

FIG. 4

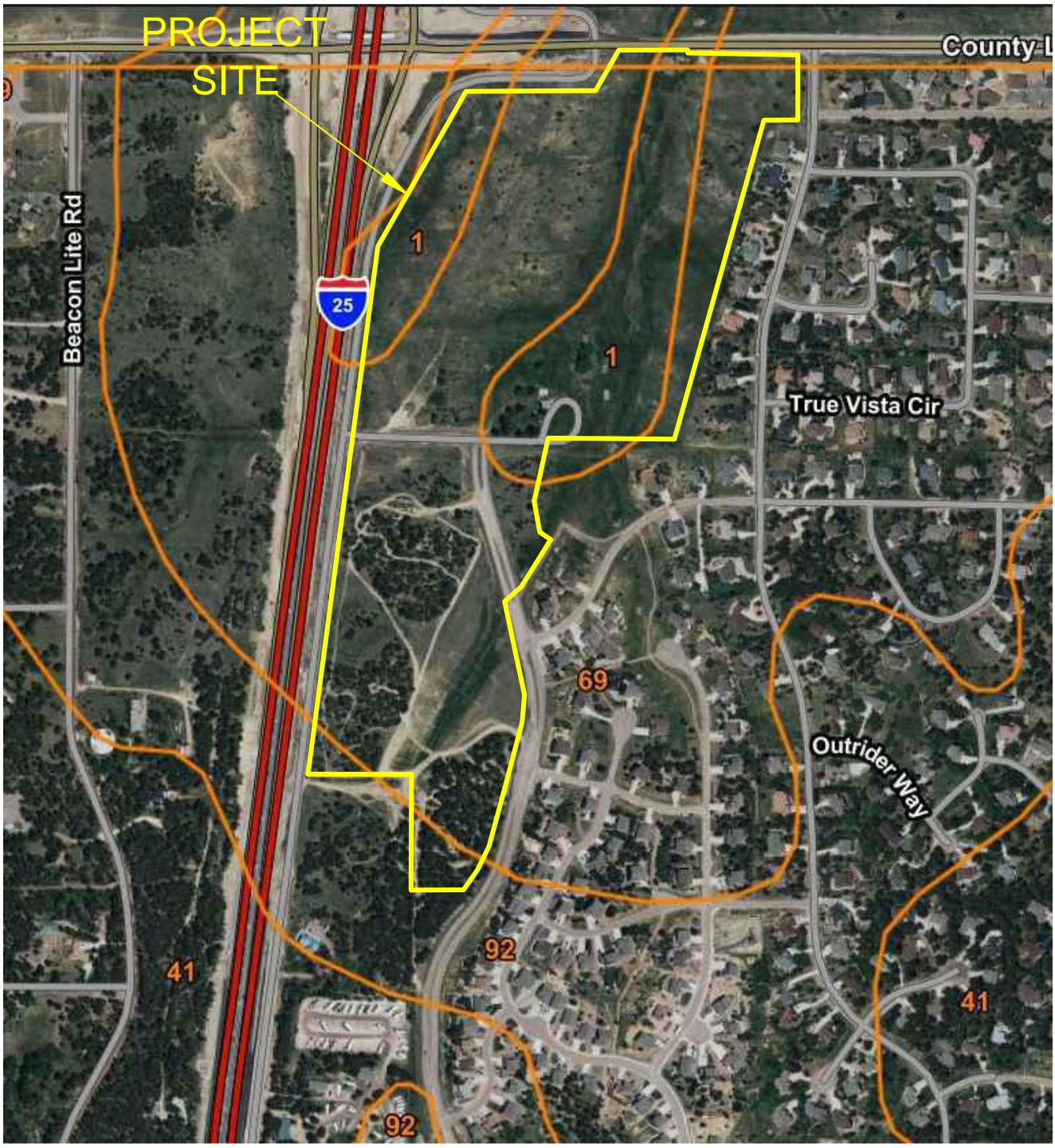

N

ENTECH ENGINEERING, INC.

USDA SOIL MAP

MONUMENT RIDGE EAST
MONUMENT RIDGE EAST, LLC

JOB NO.
230248

FIG. 5

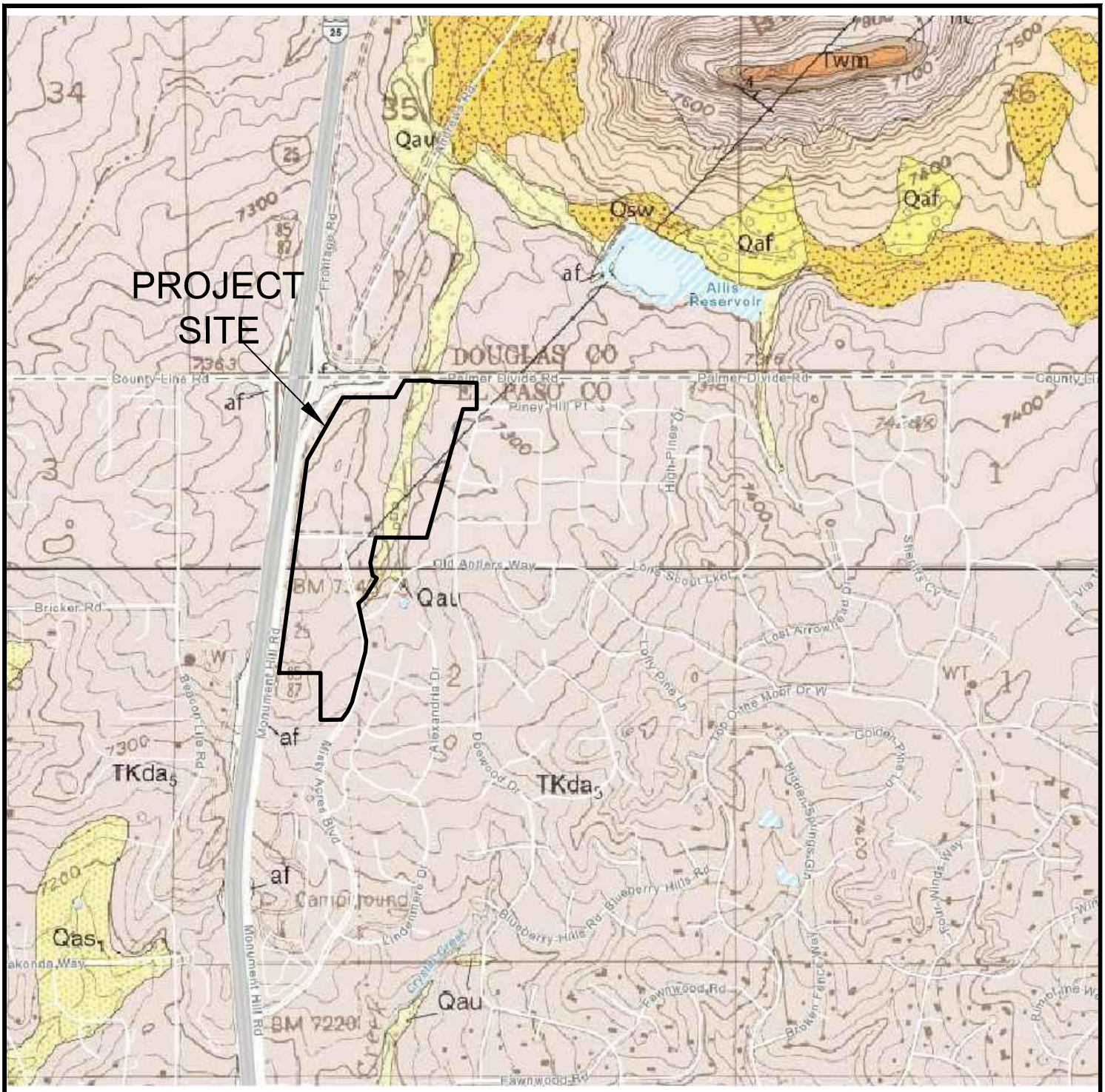

N

ENTECH ENGINEERING, INC.

GEOLOGIC MAP OF THE MONUMENT QUADRANGLE

MONUMENT RIDGE EAST

MONUMENT RIDGE EAST, LLC

JOB NO. 230248

FIG. 6

MONUMENT RIDGE EAST

LOCATED IN THE NORTH ONE-HALF OF SECTION 2, T 11 S, R 67 W OF THE 6th P.M.
EL PASO COUNTY, COLORADO

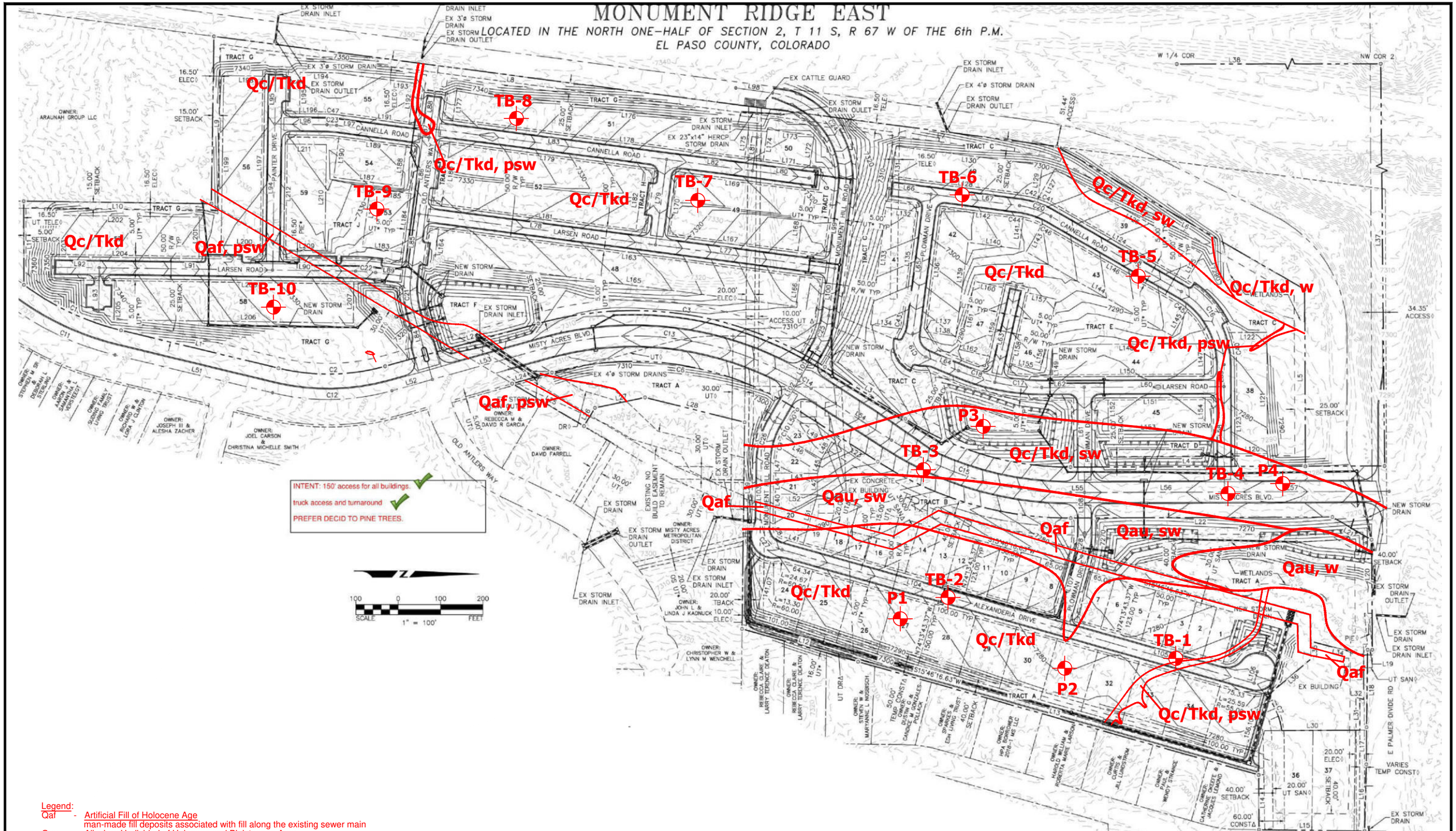

Legend:

Qaf - Artificial Fill of Holocene Age
man-made fill deposits associated with fill along the existing sewer main

Qau - Alluvium Undivided of Holocene and Pleistocene Age:
sheetwash and channel deposited alluvium along active drainage way

QcTKd - Colluvium of Quaternary Age overlying Dawson Formation of Tertiary to Cretaceous Age:
colluvial and residual soils overlying arkosic sandstone with interbedded fine-grained sandstone, siltstone and claystone

psw - potentially shallow groundwater area
sw - seasonally shallow groundwater area
w - standing water/wetlands

ENTECH ENGINEERING, INC.

GEOLOGY / ENGINEERING MAP

MONUMENT RIDGE EAST
MONUMENT RIDGE EAST, LLC

JOB NO. 230248

FIG. 7

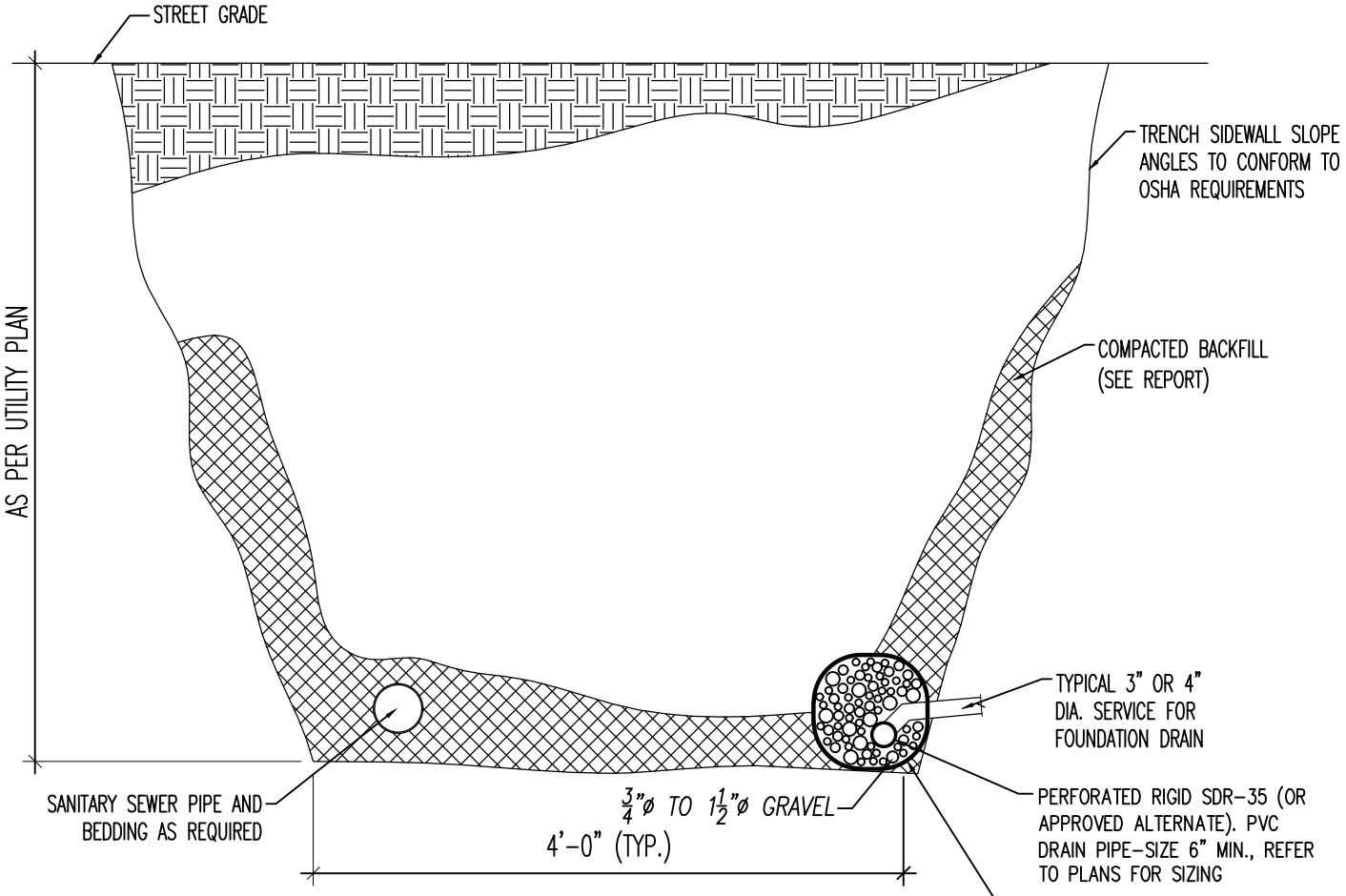

ACTIVE DRAIN BESIDE SEWER

N.T.S.

ENTECH ENGINEERING, INC.

ACTIVE SEWER UNDERDRAIN

MONUMENT RIDGE EAST
MONUMENT RIDGE EAST, LLC

JOB NO. 230248

FIG. 8

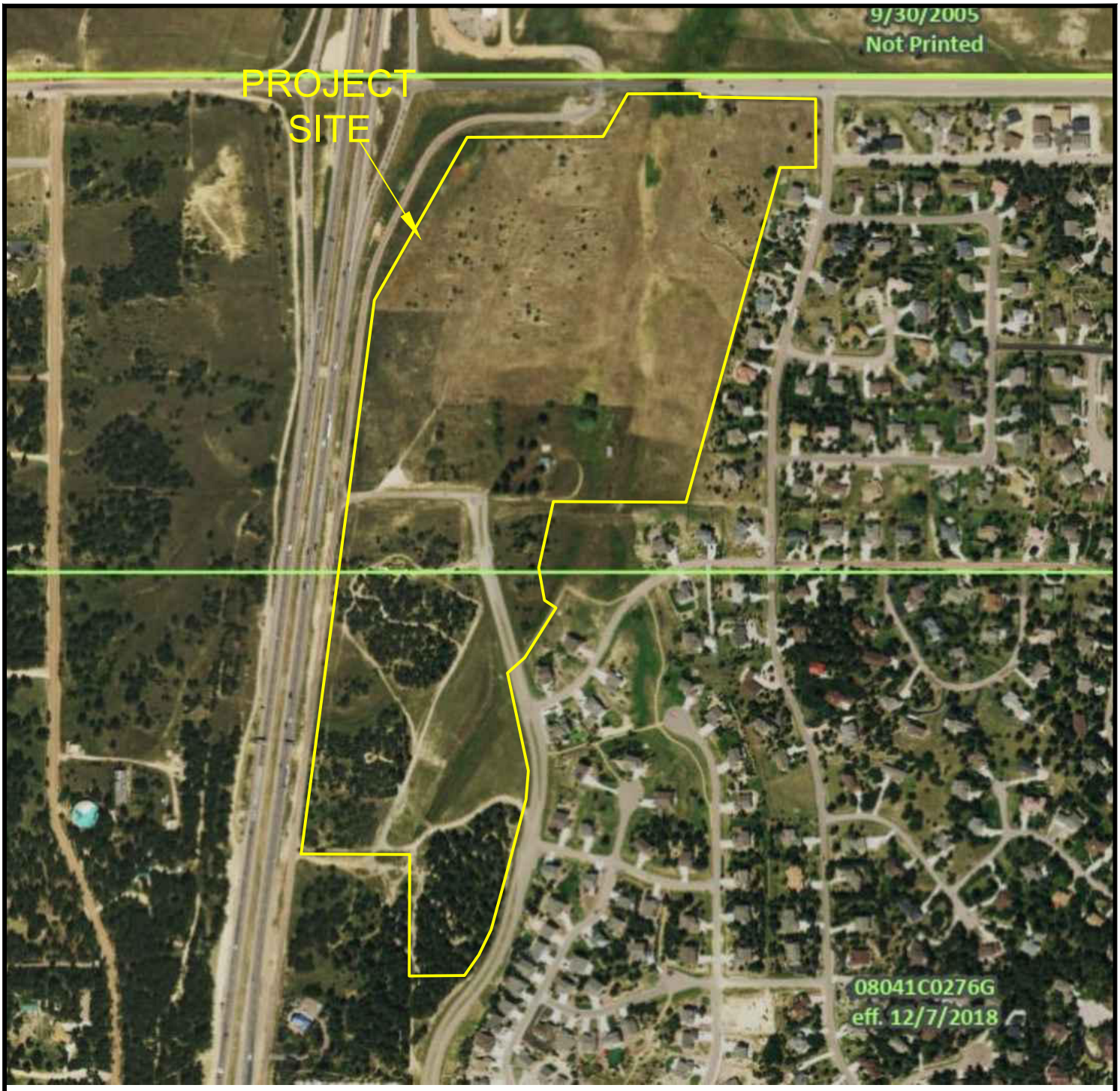

N

ENTECH
ENGINEERING, INC.

FEMA FLOODPLAIN MAP

MONUMENT RIDGE EAST
MONUMENT RIDGE EAST, LLC

JOB NO.
230248

FIG. 9

N

ENTECH ENGINEERING, INC.

USFWS WETLANDS MAP

MONUMENT RIDGE EAST
MONUMENT RIDGE EAST, LLC

JOB NO.
230248

FIG. 10

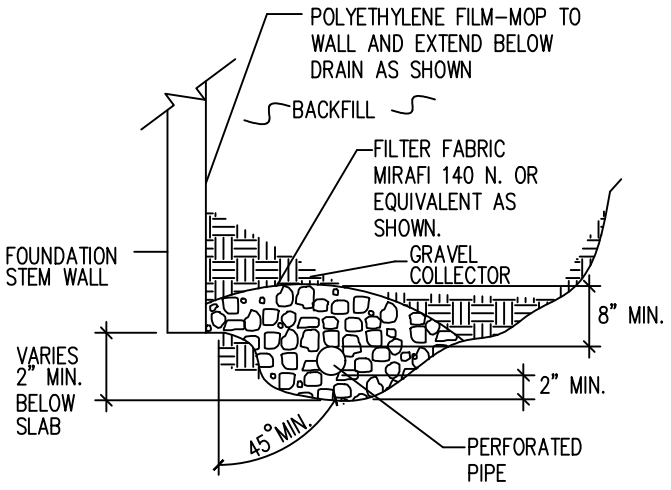

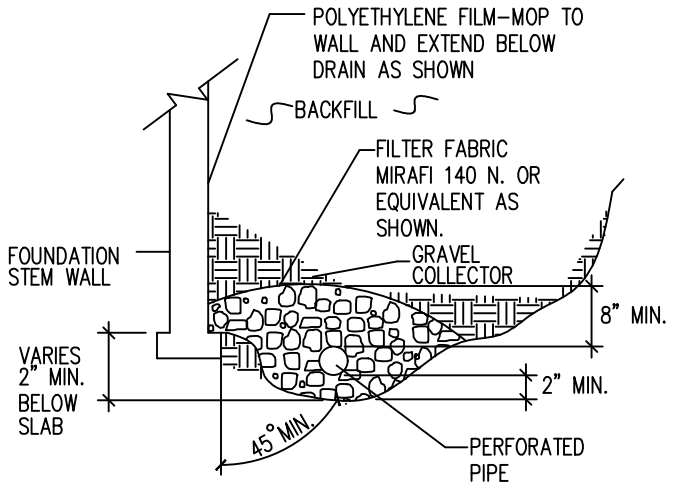

NOTES:

-GRAVEL SIZE IS RELATED TO DIAMETER OF PIPE PERFORATIONS-85% GRAVEL GREATER THAN 2x PERFORATION DIAMETER.

-PIPE DIAMETER DEPENDS UPON EXPECTED SEEPAGE. 4-INCH DIAMETER IS MOST OFTEN USED.

-ALL PIPE SHALL BE PERFORATED PLASTIC. THE DISCHARGE PORTION OF THE PIPE SHOULD BE NON-PERFORATED PIPE.

-FLEXIBLE PIPE MAY BE USED UP TO 8 FEET IN DEPTH, IF SUCH PIPE IS DESIGNED TO WITHSTAND THE PRESSURES. RIGID PLASTIC PIPE WOULD OTHERWISE BE REQUIRED.

-MINIMUM GRADE FOR DRAIN PIPE TO BE 1% OR 3 INCHES OF FALL IN 25 FEET.

-DRAIN TO BE PROVIDED WITH A FREE GRAVITY OUTFALL, IF POSSIBLE. A SUMP AND PUMP MAY BE USED IF GRAVITY OUT FALL IS NOT AVAILABLE.

ENTECH ENGINEERING, INC.

PERIMETER DRAIN DETAIL

MONUMENT RIDGE EAST
MONUMENT RIDGE EAST, LLC

JOB NO. 230248

FIG. 11

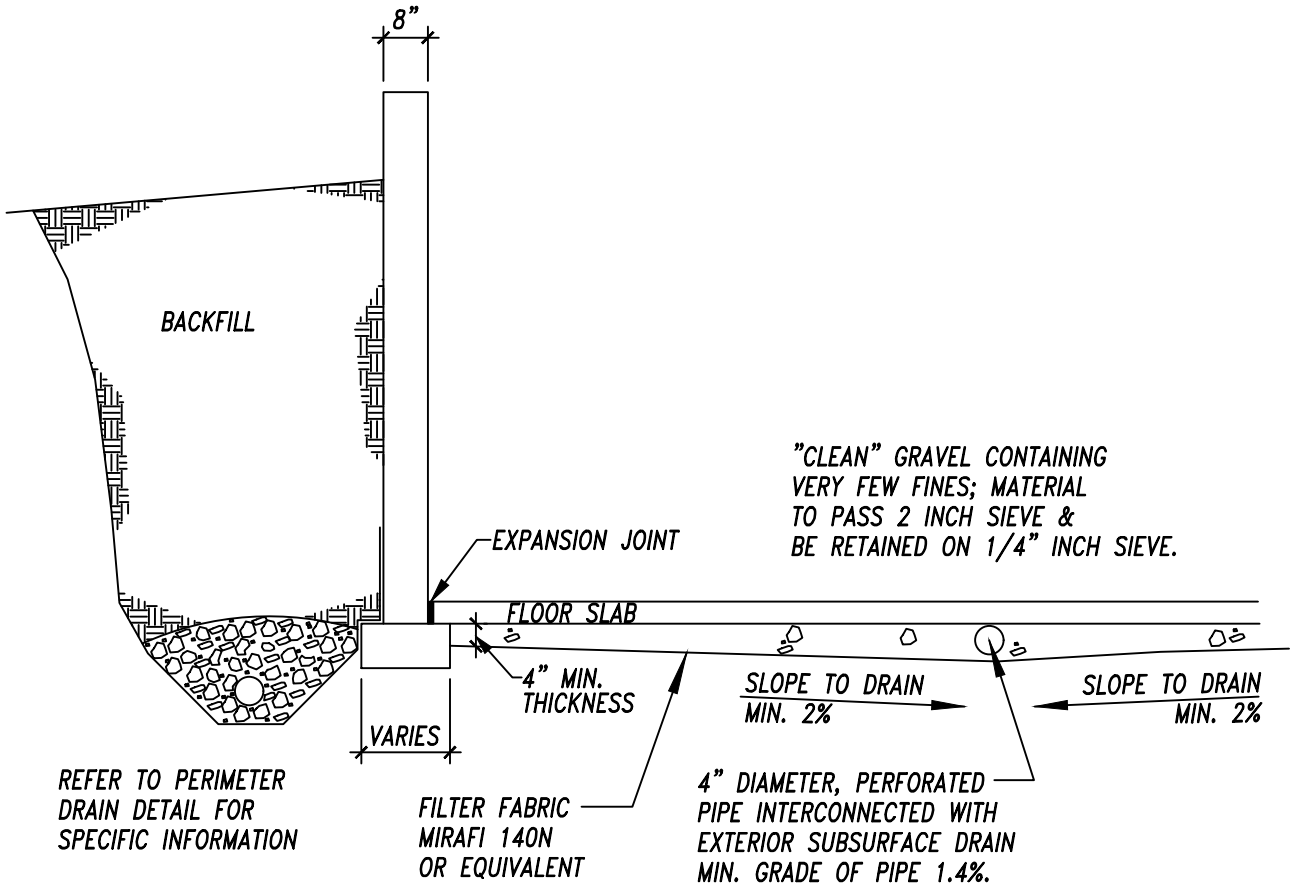

ENTECH ENGINEERING, INC.

TYP. UNDERSLAB DRAINAGE LAYER (CAPILLARY BREAK)

MONUMENT RIDGE EAST

MONUMENT RIDGE EAST, LLC

JOB NO. 230248

FIG. 12

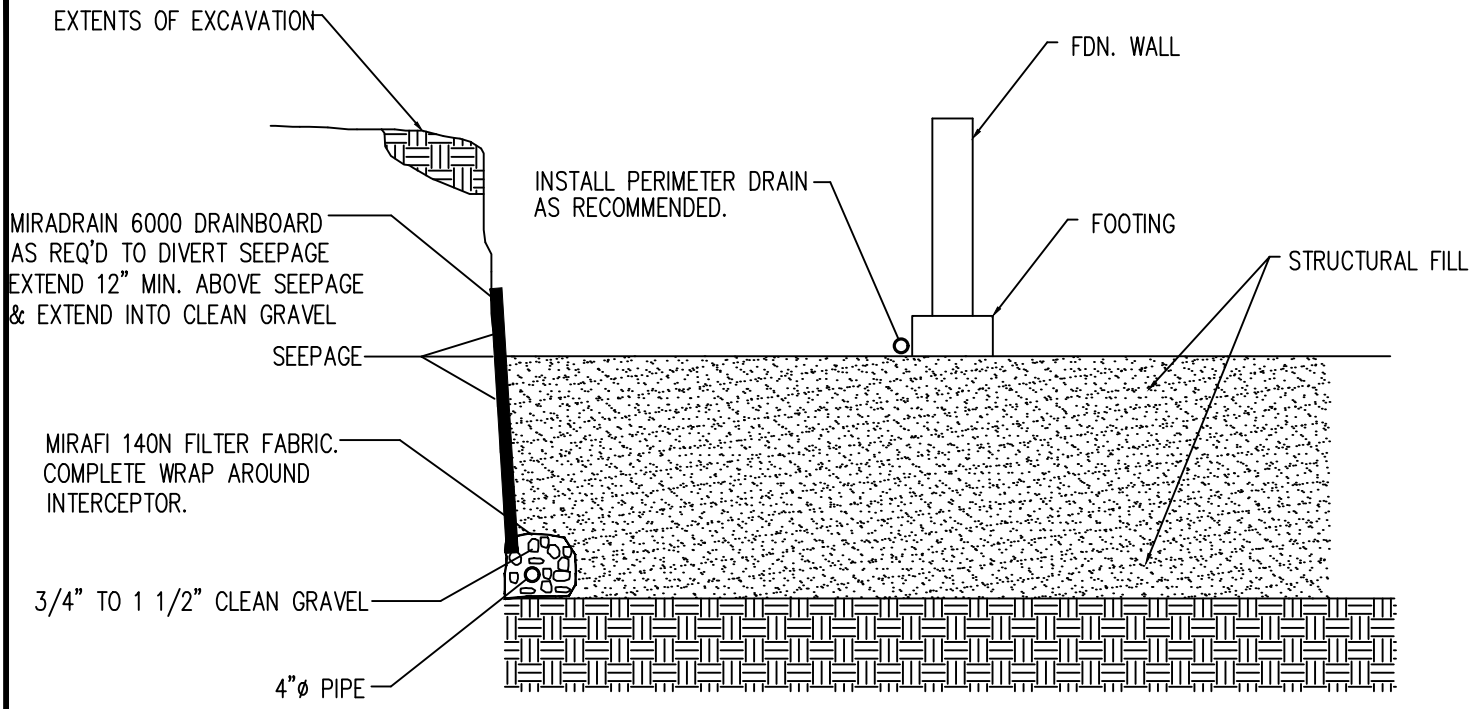

NOTE:
EXTEND INTERCEPTOR DRAIN TO UNDERDRAIN OR TO SUMP.
BENCH DRAIN INTO NATIVE SOILS 12 INCHES MINIMUM.

INTERCEPTOR DRAIN DETAIL

N.T.S.

ENTECH ENGINEERING, INC.

INTERCEPTOR DRAIN DETAIL

MONUMENT RIDGE EAST
MONUMENT RIDGE EAST, LLC

JOB NO.
230248

FIG. 13

APPENDIX A: Site Photographs

1

Looking north from the southern portion of the site.

February 28, 2023

2

Looking south from the southern portion of the site.

February 28, 2023

Job No. 230248

3

Looking southwest along drainage from Misty Acres Boulevard in the southern portion of the site.

February 28, 2023

4

Looking northwest from Misty Acres Boulevard in the southern portion of the site.

February 28, 2023

Job No. 230248

5

Looking north from the western side of the site.

February 28, 2023

6

Looking south from the western portion of the site.

February 28, 2023

Job No. 230248

7

Looking southeast from northwestern portion of the site.

February 28, 2023

8

Looking east from the northwestern portion of the site.

February 28, 2023

Job No. 230248

9

Looking south along drainage from the north-central portion of the site.

February 28, 2023

10

Looking southwest from northeast portion of the site.

February 28, 2023

Job No. 230248

APPENDIX B: Test Boring Logs and Laboratory Testing Summary, Entech Job No. 212536

Table A-1: Summary Test Boring Results

Test Boring No.	Depth to Bedrock (ft.)	Depth to Groundwater (ft.)
1	>20	9
2	19	9
3	19	1
4	>20	10
5	13	>19
6	4	>18
7	>20	>20
8	10	>20
9	>20	>20
10	>20	>19

TEST BORING NO. 1
DATE DRILLED 10/1/2021
Job # 212536

REMARKS

WATER @ 9', 10/11/21

Depth (ft)	Symbol	Samples	Blows per foot	Watercontent %	Soil Type
			11	2.2	1
5			14	9.4	1
10			37	11.4	1
15			31	13.1	1
20			42	11.6	1

SAND, CLEAN TO SILTY, FINE TO COARSE GRAINED, BROWN TO TAN, MEDIUM DENSE TO DENSE, DRY TO MOIST

TEST BORING NO. 2
DATE DRILLED 10/1/2021
CLIENT MONUNMENT RIDGE EAST, LLC
LOCATION MONUNMENT RIDGE EAST

REMARKS

WATER @ 9', 10/11/21

Depth (ft)	Symbol	Samples	Blows per foot	Watercontent %	Soil Type
			17	7.4	1
5			12	11.3	1
10			16	11.6	1
15			38	10.8	1
20			50 / 10"	9.7	3

SAND, SILTY, FINE TO COARSE GRAINED, BROWN TO TAN, MEDIUM DENSE TO DENSE, MOIST

SANDSTONE, CLAYEY, FINE TO MEDIUM GRAINED, TAN, VERY DENSE, MOIST

ENTECH ENGINEERING, INC.
505 ELKTON DRIVE
COLORADO SPRINGS, COLORADO 80907

TEST BORING LOG

DRAWN:	DATE:	CHECKED: SW	DATE: 10-20-21

JOB NO.: 212536
FIG NO.: A- 1

TEST BORING NO. 3
DATE DRILLED 10/1/2021
Job # 212536

REMARKS	Depth (ft)	Symbol	Samples	Blows per foot	Watercontent %	Soil Type
WATER @ 1', 10/11/21						
SAND, VERY CLAYEY, FINE GRAINED, GRAY, LOOSE TO MEDIUM DENSE, MOIST TO WET				6	16.7	2
	5			10	20.5	2
SAND, SILTY, FINE TO COARSE GRAINED, TAN, MEDIUM DENSE TO DENSE, MOIST	10			13	13.8	1
	15			38	10.5	1
SANDSTONE, CLAYEY, FINE TO MEDIUM GRAINED, TAN, VERY DENSE, MOIST	20			50 / 7"	11.6	3

TEST BORING NO. 4
DATE DRILLED 10/1/2021
CLIENT MONUNMENT RIDGE EAST, LLC
LOCATION MONUNMENT RIDGE EAST

REMARKS	Depth (ft)	Symbol	Samples	Blows per foot	Watercontent %	Soil Type
WATER @ 10', 10/11/21						
SAND, VERY CLAYEY, FINE GRAINED, BROWN, LOOSE TO MEDIUM DENSE, MOIST TO WET				26	5.7	2
	5			17	10.6	2
SAND, SILTY, FINE GRAINED, GRAY, MEDIUM DENSE, MOIST	10			16	15.7	1
SAND, VERY CLAYEY, GRAY, FINE TO MEDIUM GRAINED, LOOSE, VERY MOIST	15			6	18.7	2
	20			15	18.7	2

ENTECH
ENGINEERING, INC.
505 ELKTON DRIVE
COLORADO SPRINGS, COLORADO 80907

TEST BORING LOG

DRAWN:	DATE:	CHECKED: SW	DATE: 10-20-21

JOB NO.: 212536
FIG NO.: A- 2

TEST BORING NO. 5
DATE DRILLED 10/1/2021
Job # 212536

REMARKS	Depth (ft)	Symbol	Samples	Blows per foot	Watercontent %	Soil Type
DRY TO 19', 10/11/21						
SAND, SILTY, FINE TO COARSE GRAINED, BROWN TO RED BROWN, MEDIUM DENSE TO VERY DENSE, MOIST				24	5.8	1
	5			24	8.4	1
	10			40	9.3	1
WEATHERED TO FORMATIONAL SANDSTONE, SILTY, FINE TO COARSE GRAINED, RED BROWN, VERY DENSE TO MEDIUM DENSE, MOIST	15			50/9"	11.3	3
HIGHLY WEATHERED ZONE	20			25	13.6	3

TEST BORING NO. 6
DATE DRILLED 10/4/2021
CLIENT MONUNMENT RIDGE EAST, LLC
LOCATION MONUNMENT RIDGE EAST

REMARKS	Depth (ft)	Symbol	Samples	Blows per foot	Watercontent %	Soil Type
DRY TO 18', 10/11/21						
SAND, SILTY, FINE TO COARSE GRAINED, TAN, DENSE, MOIST				37	5.5	1
SANDSTONE, SILTY, FINE TO COARSE GRAINED, BROWN TO TAN, VERY DENSE, MOIST	5			50/6"	8.8	3
	10			50/10"	8.8	3
	15			50/10"	9.6	3
	20			50/9"	10.4	3

ENTECH
ENGINEERING, INC.
505 ELKTON DRIVE
COLORADO SPRINGS, COLORADO 80907

TEST BORING LOG

DRAWN:	DATE:	CHECKED: SW	DATE: 10-20-21

JOB NO.: 212536
FIG NO.: A- 3

TEST BORING NO. 7
DATE DRILLED 10/4/2021
Job # 212536

REMARKS

DRY TO 20', 10/11/21

Depth (ft)	Symbol	Samples	Blows per foot	Watercontent %	Soil Type
	SAND, VERY SILTY TO SILTY, FINE TO MEDIUM GRAINED, TAN TO BROWN, MEDIUM DENSE TO DENSE, MOIST				
			20	4.2	1
5			15	8.9	1
10			19	12.4	1
15			31	8.4	1
20			28	8.4	1

TEST BORING NO. 8
DATE DRILLED 10/4/2021
CLIENT MONUNMENT RIDGE EAST, LLC
LOCATION MONUNMENT RIDGE EAST

REMARKS

DRY TO 20', 10/11/21

Depth (ft)	Symbol	Samples	Blows per foot	Watercontent %	Soil Type
	SAND, SILTY, FINE TO COARSE GRAINED, BROWN TO TAN, MEDIUM DENSE TO DENSE, MOIST				
			18	3.0	1
5			18	11.3	1
10			44	10.0	1
	SANDSTONE, CLAYEY, FINE TO MEDIUM GRAINED, RED BROWN, VERY DENSE, MOIST				
15			50/7"	17.1	3
20			50/5"	9.1	3

ENTECH
ENGINEERING, INC.
505 ELKTON DRIVE
COLORADO SPRINGS, COLORADO 80907

TEST BORING LOG

DRAWN:	DATE:	CHECKED: SW	DATE: 10-20-21

JOB NO.: 212536
FIG NO.: A- 4

TEST BORING NO. 9
DATE DRILLED 10/4/2021
Job # 212536

REMARKS

DRY TO 20', 10/11/21

Depth (ft)	Samples	Blows per foot	Watercontent %	Soil Type
		15	11.2	1
5		17	6.8	1
10		28	10.3	1
15		17	9.0	1
20		27	12.0	1

SAND, VERY SILTY TO SILTY, FINE TO MEDIUM GRAINED, BROWN, MEDIUM DENSE, MOIST

CLAYEY LENS

TEST BORING NO. 10
DATE DRILLED 10/4/2021
CLIENT MONUNMENT RIDGE EAST, LLC
LOCATION MONUNMENT RIDGE EAST

REMARKS

DRY TO 19', 10/11/21

Depth (ft)	Samples	Blows per foot	Watercontent %	Soil Type
		22	4.1	1
5		36	5.3	1
10		26	8.2	1
15		39	10.3	1
20		49	15.2	1

SAND, SILTY, FINE TO COARSE GRAINED WITH FINE GRAINED INTERBEDS, BROWN TO TAN, MEDIUM DENSE TO VERY DENSE, MOIST

ENTECH
ENGINEERING, INC.
505 ELKTON DRIVE
COLORADO SPRINGS, COLORADO 80907

TEST BORING LOG

DRAWN:	DATE:	CHECKED: SW	DATE: 10-20-21

JOB NO.: 212536
FIG NO.: A- 5

TABLE 1

SUMMARY OF LABORATORY TEST RESULTS

CLIENT MONUNMENT RIDGE EAST, LLC
PROJECT MONUNMENT RIDGE EAST
JOB NO. 212536

SOIL TYPE	TEST BORING NO.	DEPTH (FT)	WATER (%)	DRY DENSITY (PCF)	PASSING NO. 200 SIEVE (%)	LIQUID LIMIT (%)	PLASTIC INDEX (%)	SULFATE (WT %)	FHA SWELL (PSF)	SWELL/ CONSOL (%)	UNIFIED CLASSIFICATION	SOIL DESCRIPTION
1	1	2-3			4.5	NV	NP	<0.01			SW	SAND
1	5	5			26.7						SM	SAND, SILTY
1	7	2-3			38.4						SM	SAND, VERY SILTY
1	8	10			33.3						SM	SAND, SILTY
1	9	5			43.5				20		SM	SAND, VERY SILTY
1	10	2-3			20.8						SM	SAND, SILTY
2	3	2-3	17.9	95.1	42.9	34	18	<0.01		2.8	SC	SAND, VERY CLAYEY
2	4	5			38.0						SC	SAND, VERY CLAYEY
3	6	5			28.8						SM	SANDSTONE, SILTY
3	2	20			24.6	32	16	<0.01			SC	SANDSTONE, CLAYEY

APPENDIX C: Temporary Piezometers, Test Boring Logs and Summary of Laboratory Testing Results

TEST BORING (P1) 1
DATE DRILLED 7/29/2024

REMARKS

WATER @ 16.2', 8/2/24

Depth (ft)	Symbol	Samples	Blows per foot	Watercontent %	Soil Type
			9	4.2	1
5			8	11.2	1
10			31	12.2	1
15			47	15.3	1
20			50 / 11"	11.0	3

24" TOPSOIL

SAND, CLAYEY, BROWN to OLIVE, LOOSE to DENSE, MOIST

SANDSTONE, VERY WEAK, OLIVE, HIGHLY WEATHERED (SAND, CLAYEY, VERY DENSE, MOIST)

TEST BORING (P2) 2
DATE DRILLED 7/29/2024

REMARKS

WATER @ 8.7', 8/2/24

Depth (ft)	Symbol	Samples	Blows per foot	Watercontent %	Soil Type
			16	12.4	2
5			18	5.5	1
10			6	19.4	1
15			23	16.7	1
20			29	11.6	2

2" TOPSOIL

CLAY, SANDY, OLIVE, VERY STIFF, MOIST

SAND, SILTY, LIGHT BROWN, MEDIUM DENSE, MOIST

SAND, CLAYEY, LIGHT BROWN to OLIVE, LOOSE to MEDIUM DENSE, MOIST

CLAY, SANDY, OLIVE, VERY STIFF, MOIST

ENTECH ENGINEERING, INC.

TEST BORING LOGS

MONUMENT HILL ROAD
MONUMENT RIDGE EAST

JOB NO. 230248

FIG. C-1

TEST BORING (P3) 3
DATE DRILLED 7/29/2024

REMARKS

WATER @ 6', 8/2/24

Depth (ft)	Symbol	Samples	Blows per foot	Watercontent %	Soil Type
	24" TOPSOIL				
	CLAY, SANDY, BROWN to OLIVE, STIFF to VERY STIFF, MOIST				
			12	10.8	2
5			14	17.4	2
10			10	16.1	2
15			17	11.7	2
20					

TEST BORING (P4) 4
DATE DRILLED 7/29/2024

REMARKS

WATER @ 8.2', 8/2/24

Depth (ft)	Symbol	Samples	Blows per foot	Watercontent %	Soil Type
	24" TOPSOIL				
	SAND, CLAYEY, BROWN to OLIVE, MEDIUM DENSE, MOIST				
			12	11.4	1
5			21	13.0	1
10			27	9.8	1
	CLAY, SANDY, OLIVE, MEDIUM STIFF, MOIST				
15			7	19.7	2
20					

ENTECH ENGINEERING, INC.

TEST BORING LOGS

MONUMENT HILL ROAD
MONUMENT RIDGE EAST

JOB NO. 230248

FIG. C-2

TABLE C-1
SUMMARY OF LABORATORY TEST RESULTS

SOIL TYPE	TEST BORING NO.	DEPTH (FT)	PASSING NO. 200 SIEVE (%)	USCS	SOIL DESCRIPTION
1	2	10	17.7	SM	SAND, SILTY
1	4	5	24.8	SC	SAND, CLAYEY
2	3	2-3	53.9	CL	CLAY, SANDY
3	1	20	28.1	SC	SANDSTONE (SAND, CLAYEY)

Project: Monument Hill Road
Client: Monument Ridge East
Job No: 230248

APPENDIX D: USDA Soil Survey Descriptions

El Paso County Area, Colorado

1—Alamosa loam, 1 to 3 percent slopes

Map Unit Setting

National map unit symbol: 3670
Elevation: 7,200 to 7,700 feet
Farmland classification: Prime farmland if irrigated and reclaimed of excess salts and sodium

Map Unit Composition

Alamosa and similar soils: 85 percent
Estimates are based on observations, descriptions, and transects of the mapunit.

Description of Alamosa

Setting

Landform: Flood plains, fans
Down-slope shape: Linear
Across-slope shape: Linear
Parent material: Alluvium

Typical profile

A - 0 to 6 inches: loam
Bt - 6 to 14 inches: clay loam
Btk - 14 to 33 inches: clay loam
Cg1 - 33 to 53 inches: sandy clay loam
Cg2 - 53 to 60 inches: sandy loam

Properties and qualities

Slope: 1 to 3 percent
Depth to restrictive feature: More than 80 inches
Drainage class: Poorly drained
Runoff class: Very high
Capacity of the most limiting layer to transmit water (Ksat): Moderately high (0.20 to 0.60 in/hr)
Depth to water table: About 12 to 18 inches
Frequency of flooding: Frequent
Frequency of ponding: None
Calcium carbonate, maximum content: 5 percent
Maximum salinity: Very slightly saline to strongly saline (2.0 to 16.0 mmhos/cm)
Available water supply, 0 to 60 inches: High (about 10.2 inches)

Interpretive groups

Land capability classification (irrigated): None specified
Land capability classification (nonirrigated): 5w
Hydrologic Soil Group: D
Ecological site: R048AY241CO - Mountain Meadow
Hydric soil rating: Yes

Minor Components

Other soils

Percent of map unit:
Hydric soil rating: No

Data Source Information

Soil Survey Area: Castle Rock Area, Colorado
Survey Area Data: Version 16, Aug 24, 2023

Soil Survey Area: El Paso County Area, Colorado
Survey Area Data: Version 21, Aug 24, 2023

El Paso County Area, Colorado

69—Peyton-Pring complex, 8 to 15 percent slopes

Map Unit Setting

National map unit symbol: 369g
Elevation: 6,800 to 7,600 feet
Farmland classification: Not prime farmland

Map Unit Composition

Peyton and similar soils: 40 percent
Pring and similar soils: 30 percent
Estimates are based on observations, descriptions, and transects of the mapunit.

Description of Peyton

Setting

Landform: Hills
Landform position (three-dimensional): Side slope
Down-slope shape: Linear
Across-slope shape: Linear
Parent material: Arkosic alluvium derived from sedimentary rock and/or arkosic residuum weathered from sedimentary rock

Typical profile

A - 0 to 12 inches: sandy loam
Bt - 12 to 25 inches: sandy clay loam
BC - 25 to 35 inches: sandy clay loam
C - 35 to 60 inches: sandy loam

Properties and qualities

Slope: 8 to 9 percent
Depth to restrictive feature: More than 80 inches
Drainage class: Well drained
Runoff class: Medium
Capacity of the most limiting layer to transmit water (Ksat): Moderately high (0.20 to 0.60 in/hr)
Depth to water table: More than 80 inches
Frequency of flooding: None
Frequency of ponding: None
Available water supply, 0 to 60 inches: Moderate (about 7.3 inches)

Interpretive groups

Land capability classification (irrigated): None specified
Land capability classification (nonirrigated): 4e
Hydrologic Soil Group: B
Ecological site: R049XY216CO - Sandy Divide
Hydric soil rating: No

Description of Pring

Setting

Landform: Hills
Landform position (three-dimensional): Side slope
Down-slope shape: Linear
Across-slope shape: Linear
Parent material: Arkosic alluvium derived from sedimentary rock

Typical profile

A - 0 to 14 inches: coarse sandy loam
C - 14 to 60 inches: gravelly sandy loam

Properties and qualities

Slope: 8 to 15 percent
Depth to restrictive feature: More than 80 inches
Drainage class: Well drained
Runoff class: Low
Capacity of the most limiting layer to transmit water (Ksat): High (2.00 to 6.00 in/hr)
Depth to water table: More than 80 inches
Frequency of flooding: None
Frequency of ponding: None
Available water supply, 0 to 60 inches: Low (about 6.0 inches)

Interpretive groups

Land capability classification (irrigated): None specified
Land capability classification (nonirrigated): 6e
Hydrologic Soil Group: B
Ecological site: R048AY222CO - Loamy Park
Hydric soil rating: No

Minor Components

Other soils

Percent of map unit:
Hydric soil rating: No

Pleasant

Percent of map unit:
Landform: Depressions
Hydric soil rating: Yes

Data Source Information

Soil Survey Area: Castle Rock Area, Colorado
Survey Area Data: Version 16, Aug 24, 2023

Soil Survey Area: El Paso County Area, Colorado
Survey Area Data: Version 21, Aug 24, 2023

El Paso County Area, Colorado

92—Tomah-Crowfoot loamy sands, 3 to 8 percent slopes

Map Unit Setting

National map unit symbol: 36b9
Elevation: 7,300 to 7,600 feet
Farmland classification: Not prime farmland

Map Unit Composition

Tomah and similar soils: 50 percent
Crowfoot and similar soils: 30 percent
Estimates are based on observations, descriptions, and transects of the mapunit.

Description of Tomah

Setting

Landform: Hills, alluvial fans
Landform position (three-dimensional): Crest, side slope
Down-slope shape: Linear
Across-slope shape: Linear
Parent material: Alluvium derived from arkose and/or residuum weathered from arkose

Typical profile

A - 0 to 10 inches: loamy sand
E - 10 to 22 inches: coarse sand
Bt - 22 to 48 inches: stratified coarse sand to sandy clay loam
C - 48 to 60 inches: coarse sand

Properties and qualities

Slope: 3 to 8 percent
Depth to restrictive feature: More than 80 inches
Drainage class: Well drained
Runoff class: Medium
Capacity of the most limiting layer to transmit water (Ksat): Moderately high to high (0.60 to 2.00 in/hr)
Depth to water table: More than 80 inches
Frequency of flooding: None
Frequency of ponding: None
Available water supply, 0 to 60 inches: Low (about 4.6 inches)

Interpretive groups

Land capability classification (irrigated): None specified
Land capability classification (nonirrigated): 4e
Hydrologic Soil Group: B
Ecological site: R049XY216CO - Sandy Divide
Hydric soil rating: No

Description of Crowfoot

Setting

Landform: Alluvial fans, hills
Landform position (three-dimensional): Crest, side slope
Down-slope shape: Linear
Across-slope shape: Linear
Parent material: Alluvium

Typical profile

A - 0 to 12 inches: loamy sand
E - 12 to 23 inches: sand
Bt - 23 to 36 inches: sandy clay loam
C - 36 to 60 inches: coarse sand

Properties and qualities

Slope: 3 to 8 percent
Depth to restrictive feature: More than 80 inches
Drainage class: Well drained
Runoff class: Medium
Capacity of the most limiting layer to transmit water (Ksat): Moderately high to high (0.60 to 2.00 in/hr)
Depth to water table: More than 80 inches
Frequency of flooding: None
Frequency of ponding: None
Available water supply, 0 to 60 inches: Low (about 4.7 inches)

Interpretive groups

Land capability classification (irrigated): None specified
Land capability classification (nonirrigated): 4e
Hydrologic Soil Group: B
Ecological site: R049XY216CO - Sandy Divide
Hydric soil rating: No

Minor Components

Other soils

Percent of map unit:
Hydric soil rating: No

Pleasant

Percent of map unit:
Landform: Depressions
Hydric soil rating: Yes

Data Source Information

Soil Survey Area: Castle Rock Area, Colorado
Survey Area Data: Version 16, Aug 24, 2023

Soil Survey Area: El Paso County Area, Colorado
Survey Area Data: Version 21, Aug 24, 2023

APPENDIX E: Entech Response Letter to CGS Review dated June 13, 2024

ENTECH
ENGINEERING, INC.
505 ELKTON DRIVE
COLORADO SPRINGS, CO 80907
PHONE (719) 531-5599

August 7, 2024

Monument Ridge East, LLC
101 North Cascade Avenue, Suite 10
Colorado Springs, Colorado 80903

Attn: Norbie Larsen

Re: Response to Review Comments
Monument Ridge East
Monument Hill Road and Palmer Divide Road
El Paso, Colorado
Entech Job No. 230248

Ref: Entech Engineering, Inc., dated March 7, 2023. *Soils and Geology Study, Monument Ridge East, Monument Hill Road and Palmer Divide Road, El Paso County*, *Colorado*. Entech Job No. 230248.

Colorado Geological Survey, dated June 13, 2024. *Monument Ridge East, File No. SP241,* CGS Unique No. EP-24-0077.

WSB, dated September 10, 2021, *Level 2 Wetland Delineation Report, Monument Ridge East Development, Woodmoor, El Paso County, Colorado.* WSB Project No. 18697.

Department of the Army Corps of Engineers, dated March 22, 2022, *Jurisdictional Determination – Action No. SPA-2005-00679.*

Dear Mr. Larsen:

Entech Engineering, Inc. (Entech) has reviewed the CGS comments dated June 13, 2024 on the proposed Monument Ridge East development. This letter presents our responses to the CGS comments. It should be noted that additional investigation/design will be required and completed as the project continues through the development process.

The CGS comments, WSB *Level 2 Wetland Delineation Report, and USACE Jurisdictional Determination letter* are attached with this response letter. The responses to their comments are presented below:

ENTECH ENGINEERING, INC. RESPONSES

Entech Response to Comment 1: The Geology/Engineering Geology Map has been updated and is included with the revised report.

Entech Response to Comment 2: The proposed grading indicates significant cuts of up to 20 to 24 feet across the site. Four piezometers were recently installed in areas of proposed cuts, and where shallow water conditions were previously encountered in Test Boring Nos. 1 – 4. Significant drainage improvements and interceptor drains are planned. Additional site investigation will be conducted during the development process and recommendations regarding an underdrain system will be provided. The underdrain system must have a daylight to function properly. At this time, we do not believe that a general “no basement” statement is warranted. This statement should be used for areas where further investigation/analysis determines that basement construction is not feasible.

Entech Response to Comment 3: Foundations should be 3 feet above water for typical construction practices. Areas of shallow water will be further evaluated to determine mitigation measures required for the proposed construction. Mitigation measures may include raising the site grades, interceptor drains, and utility drains. Entech will continue to monitor the temporary piezometers throughout the coming seasons and during the development process. The readings

will be utilized to evaluate the development. Additional piezometers may be recommended following site grading and utility installation.

Entech Response to Comment 4: Figure 7 has been updated, and a geologic hazard note provided for the preliminary plan/plat.

Entech Response to Comment 5: Entech is in agreement that lots should not be located within the delineated jurisdictional wetlands located in the northern and northwestern portions of the site. The jurisdictional wetlands lie within no-build areas and will be avoided by the development.

Entech Response to Comment 6: Entech is in agreement that filling of the natural drainages will not mitigate the shallow groundwater conditions and an undrain system will be needed. Additional site investigation will be conducted during the development process and recommendations regarding an underdrain system will be provided. The underdrain system must have a daylight to function properly.

We trust this has provided you with the information you require. If you have any questions or need additional information, please do not hesitate to contact us.

Respectfully Submitted,

ENTECH ENGINEERING, INC.

Logan L. Langford, P.G.
Sr. Geologist

Reviewed by:

COLORADO LICENSED
JOSEPH COLLIN GOODE
23725
PROFESSIONAL ENGINEER

Digitally signed by Joseph C. Goode Jr.
Date: 08/07/24

Joseph C. Goode, Jr., P.E.
President

LLL:JCG
Encl.
F:\AA Projects\2023\230248-Monument Ridge East-Monument Hill Rd & Palmer Divide Rd-300-SGS\Reports\230248 CGS Response Letter.docx

EP-24-0077 Monument Ridge East
N½ Section 2, T11S, R67W, 6th Meridian
39.1284, -104.8624
File Number: SP241
Preliminary plan to create 342 residential lots on 63 acres.

With this referral, we received a request to provide Review Comments (Email dated 6/13/2024); Construction Drawings (Drexel, Barrell & CO., January 3, 2024); Preliminary Drainage Report (PRC Engineering, April 2024); Preliminary Plan Drawings (Bear Creek Surveying, Inc., 4/12/2024); Soil and Geology Study (Entech Engineering, Inc., 3/7/2023), and other documents. We offer the following comments and recommendations.

1. Entech encountered groundwater at depths ranging from 1 to 10 feet during drilling. However, figure 7 of their report fails to depict this shallow groundwater in the relevant areas. Test Boring No. 3, which includes groundwater at 1 foot, is mapped as Colluvium and Dawson Formation without shallow groundwater. It is imperative that Figure 7 is revised to reflect the geologic hazards and constraints.

2. Entech states (page 11), "*Proposed grading plans indicate these areas that have been mapped in lot areas will be filled and raised above the seasonally shallow and potentially seasonally shallow groundwater areas*." In our cursory review of the preliminary plan with existing and proposed grades, it appears that most of the site will contain significant cuts to achieve the proposed grades, in some areas up to 20 feet. Due to the shallow groundwater conditions at this site and the cuts planned, **no basements should be allowed**.

3. CGS agrees with Entech (page 10), "Foundations should maintain a minimum separation of 3 feet between the foundation grade and the maximum anticipated groundwater level." The maximum anticipated groundwater level should be determined during the preliminary plat application by performing a groundwater observation/monitoring program. Site grades may require filling to accommodate this recommendation. CGS recommends that a groundwater observations/monitoring program is performed in areas of shallow groundwater and potentially shallow groundwater. To be effective, this monitoring should be performed through Spring/Summer/Fall/Winter 2024.

4. A geologic hazard note is not included in the preliminary plan drawings. CGS recommends updating Figure 7 of Entech's report and adding a note to the preliminary plan/plat listing the geologic hazards and constraints, along with mitigation measures.

5. Wetlands (Freshwater Emergent/Freshwater Forested/Shrub Wetland) are located within the site. However, these areas do not appear to be portrayed correctly in Figure 7 of Entech's report. These areas are associated with standing water; lots should not be located within these areas, a setback should be established, and these areas should be designated as "No Build Areas". Setbacks and no build areas should be noted on the plans.

6. CGS has concerns with lots and future improvements constructed over the existing drainage that runs north and south through the site, even following grading operations, as this natural drainage can be an area where water will continue to migrate. CGS recommends that if lots are planned (or allowed) within/near the existing drainage (after rerouting and site grading occurs), these areas be further evaluated during site-specific geotechnical investigations to determine the impact (i.e., groundwater conditions, differential settlement, etc.) on future development. It would be prudent to install a drain system within the existing drainage prior to grading operations if it is not planned already.

Submitted 6/13/2024 by Amy Crandall, Colorado Geological Survey: acrandall@mines.edu

ENTECH
ENGINEERING, INC.

WSB, Level 2 Wetlands Delineation Report, dated September 10, 2021, WSB Project No. 18697

LEVEL 2 WETLAND DELINEATION REPORT

Monument Ridge East Development

Woodmoor | EL PASO COUNTY, COLORADO

SEPTEMBER 10, 2021

Prepared for:
Monument Ridge East, LLC
5505 List Drive
Colorado Springs, CO 80919

WSB PROJECT NO. 18697

wsb

LEVEL 2 WETLAND DELINEATION REPORT

Monument Ridge East Development

For:

Monument Ridge East, LLC

September 10, 2021

Prepared by:

CERTIFICATION

The report was prepared by:

Shawn Williams, CMWP No.1178

Date: September 10, 2021 Title: Senior Environmental Scientist

I hereby certify that this report was reviewed by me and that I am a Certified Minnesota Wetland Professional (CMWP).

Alison Harwood, CMWP No.1238

Date: September 10, 2021 Title: Director of Natural Resources

TABLE OF CONTENTS

TITLE PAGE
CERTIFICATION
TABLE OF CONTENTS

I. Introduction 1
  A. Project Location 1
  B. Project Purpose 1
  C. Project Scope 1
  D. Summary of Findings 1
II. Delineation Procedure 2
  A. Off-Site Determination: Base Map Review 2
  B. On-Site Determination 2
III. Results and Wetland Information 4
  A. Wetland A 4
  B. Wetland B 4
  C. Additional Sampled Areas 5
  D. Additional Water Resources 5
IV. Summary and Closing Statements 5
V. References 6

Appendix A: Figure 1 – Project Location
Figure 2 – Topography
Figure 3 – CDPHE Public Waters
Figure 4 – National Wetlands Inventory
Figure 5 – County Soil Survey

Appendix B: Figure 6 – Wetland Boundary
Wetland Determination Data Forms

Appendix C: Wetland Photos

Appendix D: Antecedent Precipitation Data

SECTION I

I. Introduction

A. Project Location

The project is located immediately southeast of the intersection of Interstate 25 and Palmer Divide Road in the City of Monument (Woodmoor), El Paso County, CO. The project area consists of approximately 66 acres (**Figure 1, Appendix A**).

B. Project Purpose

Monument Ridge East, LLC is proposing a residential development at this location. This report is intended to address all jurisdictional Waters of the United States (WOUS) for final design and permitting of this project. This project was authorized by Monument Ridge East, LLC.

C. Project Scope

The scope of this project was to delineate all wetlands within the outlined project area.

D. Summary of Findings

A Level 2 wetland delineation was performed on the site. A total of two (2) wetlands were identified and delineated in the preparation of this report, as summarized in **Table 1**. For a visual representation of the wetland locations and size, please see **Figure 6**, **Appendix B**. All potential wetland areas (mapped hydric soils, NWI signatures, and low depressional areas) were reviewed on-site and either delineated or determined to be upland.

Table 1: Summary of Delineated Wetlands, Monument Ridge East, El Paso County, Colorado

Wetland ID	Delineation Method	No. Flags/ No. Transects	Circular 39 (Cowardin)	NWI *	CO Stream Segments**	County Soil Survey (Hydric/Non-Hydric)***	Wetland Size (acres)
A	Level 2	1-28/1	Type 1/3 (PEM1A/ PEM1C)	**Yes**	**N/A**	**1 (Alamosa loam)**	**0.90**
B	Level 2	1-9/1	Type 1 (PEM1A)	**Yes**	**N/A**	**1 (Alamosa loam)**	**0.40**

II. Delineation Procedure

A. Off-Site Determination: Base Map Review

Topography: The landform consists of sloping hills and two wetlands. The wetlands were located at two mapped low drainageways. Water generally flows north (**Figure 2, Appendix A**).

The Colorado Department of Public Health and Environment – Water Quality Control Division *2020 Spatial Representation of Stream Segment* data (CDPHE 2020) shows no stream segments in the project area (**Figure 3, Appendix A**).

The *National Wetlands Inventory Map* (US Fish and Wildlife Service) identified three wetland types as part of the National Wetlands Inventory (NWI) (**Figure 4, Appendix A**). The NWI identifies the following wetland types: PEM1C, PSS1C, and R4SBC.

The *Soil Survey of El Paso County, Colorado* (https://websoilsurvey.sc.egov.usda.gov/App/HomePage.htm) identified the following soils (**Table 2**) within the project area (**Figure 5, Appendix A**):

Table 2: Soil Survey

Map Symbol	Soil Unit Name	Percent Hydric	Rating
1	Alamosa loam, 1 to 3 percent slopes	85	Predominantly hydric
69	Peyton-Pring complex, 8 to 15 percent slopes	0	Not hydric
92	Tomah-Crowfoot loamy sands, 3 to 8 percent slopes	0	Not hydric
PrE2	Peyton-Pring-Crowfoot Complex, 8-15 percent slopes	0	Not hydric
Lw	Loamy Wet Alluvial Land	1	Predominantly not hydric

Antecedent Climate Conditions: The *U.S. Drought Monitor* (UNL) was referenced to determine the status of drought conditions within El Paso County, preceding the August 26, 2021 site visit, which fell within the normal precipitation range. The U.S. Drought Monitor is jointly produced by the National Drought Mitigation Center (NDMC) at the University of Nebraska-Lincoln, the United States Department of Agriculture, and the National Oceanic and Atmospheric Administration. The map is courtesy of NDMC. The Drought Monitor record for August 26, 2021 can be found in **Appendix D**.

B. On-Site Determination

A Level 2 field investigation was conducted by Shawn Williams (Certified Minnesota Wetland Professional - CMWP No. 1178) of WSB on August 26, 2021 within the project area. No deviation or omissions were undertaken as part of this investigation.

The project area was delineated using the routine methodology described in the *Corps of Engineers Wetlands Delineation Manual* (US Army Corps of Engineers 1987), with additional guidance provided by the *Regional Supplement to the Corps of Engineers Wetland Delineation Manual: Western Mountains, Valleys, and Coast Region (Version 2.0).* Wetlands were classified according to the methodologies set forth in *Wetlands of the United States (Circular 39),* USFWS Shaw and Fredine 1971 and *Classification of Wetlands and Deepwater Habitats of the United States*, Cowardin 1979. The wetland types in this report are classified by the Circular 39 and Cowardin Classifications.

Soil types were researched prior to the on-site investigation with the assistance of the *Soil Survey of El Paso County* from the National Resources Conservation Service. All soil test pits were excavated to a minimum depth of 24 inches unless otherwise noted. Soil colors were described on-site per the *Munsell Soil Color Charts* (2009 Revised Edition) from the test pits in and adjacent to the wetlands. Hydric soils were identified using the current technical criteria for hydric soils developed by the NRCS in 2017 (Version 8.1). The presence of water was observed after time was allowed for movement of water through the substrate. This time varied depending upon soil characteristics.

The quadrant sampling method was employed for all sample points unless otherwise noted. Vegetation was measured as actual areal cover and may exceed 100 percent of total area due to overlap. Grasses and herbaceous vegetative cover were measured within a circular plot of a 5-foot-radius, all woody shrubs and saplings were measured within a circular plot with a 15-foot-radius, and trees and woody vines were measured in a 30-foot-radius circular plot. Regional plant identification resources were utilized in the identification of plant species, with indicator status taken from the *2018 National Wetland Plant List* (US Army Corps of Engineers 2018). Plant species dominance was estimated based on the absolute percent coverage for herbaceous, shrub-sapling, and tree strata if present. In addition to the use of indicators of hydrology, hydric soils, and the presence of hydrophytic vegetation, other evidence such as topographic breaks and watershed characteristics were used to determine the wetland boundary.

Western Mountains, Valleys, and Coast Regional Supplement Routine Wetland Delineation data forms were used to record vegetation, hydrology, and soil characteristics at sample points in and adjacent to the wetlands (**Appendix B**). Sampling transects were taken along the wetland-upland boundary of the wetland. Transects and delineated wetland boundaries were field surveyed using a sub-meter accuracy hand-held GPS unit. Approximate sampling points and delineated wetland edges are shown on **Figure 6, Appendix B**. Pictures of each wetland can be found in **Appendix C**.

III. Results and Wetland Information

The wetland delineation data forms (**Appendix B**) and photos (**Appendix C**) are attached. A summary of the delineation is below.

A. Wetland A

Circular 39: 1/3
Cowardin: PEM1A/PEM1C
Soil mapping unit: Alamosa loam (1)
No. Transects: 1 **No. Additional Sample Points:** 0
Wetland Flags: 1-28
Wetland Size (within Project Area): 0.90 acre

Wetland A is positioned in a sloped depression. The wetland is characterized as a seasonally flooded/shallow marsh wetland. The wetland boundary is outlined in **Figure 6, Appendix B**.

Dominant vegetation in the wetland consisted of Canadian thistle (*Cirsium arvense*) and Hybrid cattail (Typha x glauca) in the herb stratum. Hydric soil indicators consisted of Redox Dark Surface (F6). Hydrology indicators included Saturation (A3), Hydrogen Sulfide Odor (C1), Drainage Patterns (B10), Geomorphic Conditions (D2), and FAC-Neutral Test (D5).

Dominant vegetation in the upland consisted of Smooth brome (*Bromus inermis*) and Black bent (*Agrostis gigantea*) in the herb stratum. No hydric soil or hydrology indicators were observed.

The wetland boundary was placed along a slight topographic break where wetland hydrology was no longer observed. Wetland A flows from south to north, and conveys water under Palmer Divide Road via a culvert.

B. Wetland B

Circular 39: 1
Cowardin: PEM1A
Soil mapping unit: Alamosa loam (1)
No. Transects: 1 **No. Additional Sample Points:** 0
Wetland Flags: 1-9
Wetland Size (within Project Area): 0.40 acre

Wetland B is positioned in a sloped depression. The wetland is characterized as a seasonally flooded wetland. The wetland boundary is outlined in **Figure 6, Appendix B**.

Dominant vegetation in the wetland consisted of Canadian thistle (*Cirsium arvense*) and Bluejoint (*Calamagrostis canadensis*) in the herb stratum. Hydric soil indicators consisted of Redox Depressions (F8). Hydrology indicators included Oxidized Rhizospheres along Living Roots (C3), Geomorphic Conditions (D2), and FAC-Neutral Test (D5).

Dominant vegetation in the upland consisted of Smooth brome (*Bromus inermis*) and Common yarrow (*Achillea millefolium*) in the herb stratum. No hydric soil or hydrology indicators were observed.

The wetland boundary was placed along a defined topographic break where wetland hydrology was no longer observed. Wetland B flows from southwest to northeast, and conveys water under Palmer Divide Road via a culvert.

C. Additional Sampled Areas

Two additional sample points were taken (Sample Point 1 Up, Sample Point 2 Up). These two sample points did not meet at least one of the three wetland criteria, and were determined to be upland.

D. Additional Water Resources

No additional water resources were identified within the project area.

IV. Summary and Closing Statements

Two (2) wetlands were delineated within the project area using the Level 2 method. Two (2) additional areas were investigated but determined to be upland.

The wetland delineation report was completed by Shawn Williams of WSB. This delineation report is being submitted as a request for approval of Wetland Type and Boundary of the wetland described herein. This report supports the Approved Jurisdictional Determination (AJD) request prepared by WSB, dated July 28, 2021. This report is associated with US Department of Army (DA) # SPA-2005-0679.

V. References

The following sources of information were reviewed to assist in performing the wetland delineation.

Literature Sources

Colorado Department of Public Health and Environment – Water Quality Control Division. *2020 Spatial Representation of Stream Segment* data (CDPHE 2020). Available online at Center for Health and Environmental Data | Department of Public Health & Environment (colorado.gov). Accessed 8/30/2021.

Cowardin L.M. USFWS. 1979. Classification of Wetlands and Deepwater Habitats of the United States. U.S. Government Printing Office, Carver, D.C. 131 pp.

Fredine, C.G. and S.P. Shaw. 1956. Wetlands of the United States (Circular 39). United States Government Printing Office, Carver, D.C.

Kollmorgen Instruments Corp. 2009 Revised Edition. Munsell Soil Color Charts.

National Technical Committee for Hydric Soils. 1991. Hydric Soils of the United States. U.S.D.A. Soil Conservation Service. Carver, D.C. Misc. Publication 1491. Revised December 15, 1995.

National Drought Mitigation Center. University of Nebraska-Lincoln. 2021. Available online at Current Map | U.S. Drought Monitor (unl.edu). Accessed 9/7/2021.

United States Army Corps of Engineers. 2018 National Wetland Plant List, version 3.4. Engineer Research and Development Center. Cold Regions Research and Engineering Laboratory, Hanover, NH. http://wetland-plants.usace.army.mil/

United States Army Corps of Engineers. August 2010. Regional Supplement to the Corps of Engineers Wetland Delineation Manual: Western Mountains, Valleys, and Coast Region (Version 2.0), ed. J. S. Wakeley, R. W. Lichvar, and C. V. Nobel. ERDC/EL TR-10-03. Vicksburg, MS: U.S. Army Engineer Research and Development Center.

United States Army Corps of Engineers. 1987 2014. Corps of Engineers Wetlands Delineation Manual. Technical Report Y-87-1. Version 2.0 Waterways Experiment Station.

Soil Survey Staff, Natural Resources Conservation Service, United States Department of Agriculture. Web Soil Survey, Colorado. Available online at http://websoilsurvey.nrcs.usda.gov/. Accessed 8/25/2021.

APPENDIX A

Figure 1: Project Location
Figure 2: Topography
Figure 3: CDPHE 2020 Stream Segments
Figure 4: National Wetlands Inventory
Figure 5: County Soil Survey

Document Path: K:\018697-000\GIS\Maps\WetlandDelineation_MonumentRidge\Fig1_ProjectLocation Date Saved: 8/30/2021

RICHMOND AMERICAN HOMES

Figure 1 - Project Location

Monument Ridge Development
Woodmoor, Colorado

N

0 4,000 Feet

1 inch = 4,000 Ft

wsb

Document Path: K:\018697-000\GIS\Maps\WetlandDelineation_MonumentRidge\Fig2_Topography Date Saved: 8/30/2021

RICHMOND AMERICAN HOMES

Figure 2 - Topography

Monument Ridge Development
Woodmoor, Colorado

N

0 500 Feet
1 inch = 500 Ft

wsb

Document Path: K:\018697-000\GIS\Maps\WetlandDelineation_MonumentRidge\Fig3_PWI Date Saved: 8/30/2021

RICHMOND AMERICAN HOMES

Figure 3 - CDPHE Public Waters

Monument Ridge Development
Woodmoor, Colorado

N

0 1,000 Feet

1 inch = 1,000 Ft

wsb

Document Path: K:\018697-000\GIS\Maps\WetlandDelineation_MonumentRidge\Fig4_NWI Date Saved: 8/30/2021

RICHMOND AMERICAN HOMES

Figure 4 - National Wetlands Inventory

Monument Ridge Development
Woodmoor, Colorado

N

0 500 Feet
1 inch = 500 Ft

wsb

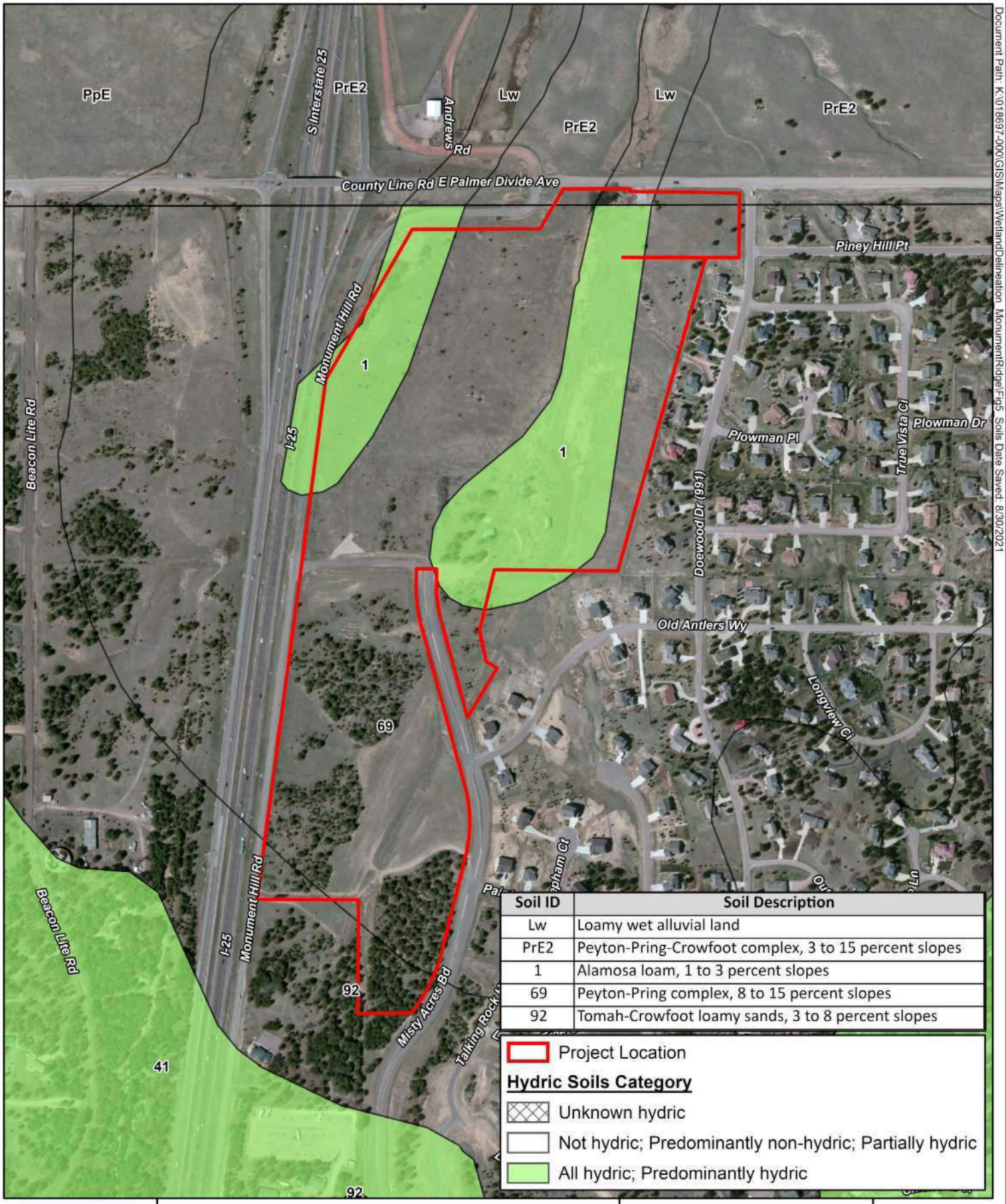

RICHMOND AMERICAN HOMES

Figure 5 - County Soil Survey

Monument Ridge Development
Woodmoor, Colorado

N

0 500 Feet

1 inch = 500 Ft

wsb

APPENDIX B

Figure 6: Wetland Boundary
Wetland Determination Data Forms

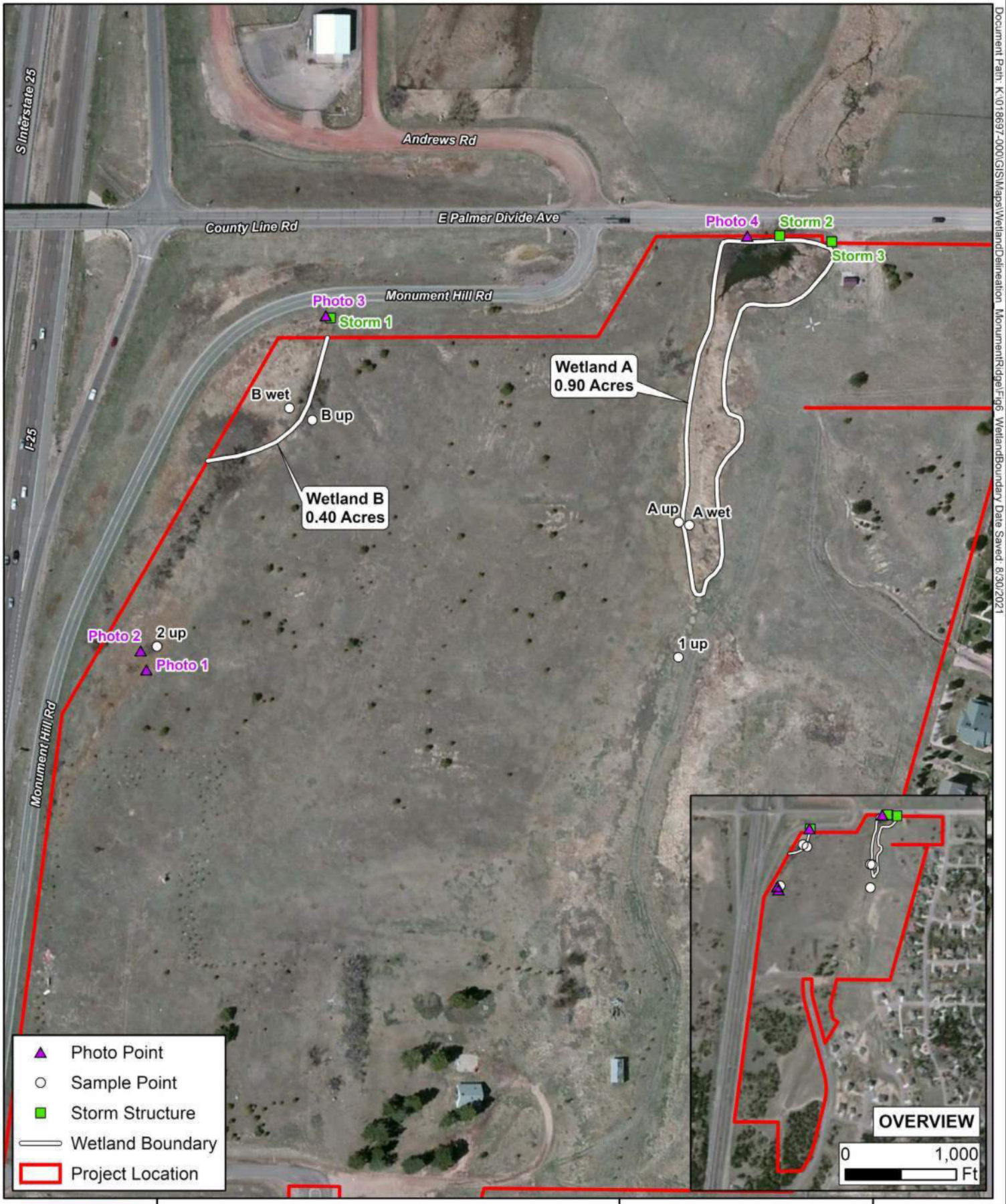

Document Path: K:\018697-000\GIS\Maps\WetlandDelineation_MonumentRidge\Fig6_WetlandBoundary Date Saved: 8/30/2021

RICHMOND AMERICAN HOMES

Figure 6 - Wetland Boundary

Monument Ridge Development
Woodmoor, Colorado

N

0 200 Feet

1 inch = 200 Ft

wsb

WETLAND DETERMINATION DATA FORM – Western Mountains, Valleys, and Coast Region

Project/Site: Monument Ridge East Development City/County: Woodmoor/ El Paso Sampling Date: 8/26/2021

Applicant/Owner: Monument Ridge East, LLC State: CO Sampling Point: A Wet

Investigator(s): WSB (Shawn Williams) Section, Township, Range: Sec. 2, T11S, R67W

Landform (hillslope, terrace, etc.): hillslope Local relief (concave, convex, none): concave Slope (%): 4

Subregion (LRR): E Lat: 39.128710 Long: -104.860271 Datum: WGS 84

Soil Map Unit Name: Alamosa loam, 1 to 3 percent slopes (1) NWI classification: PEM1C, R4SBC

Are climatic / hydrologic conditions on the site typical for this time of year? Yes X No _____ (If no, explain in Remarks.)

Are Vegetation _____, Soil _____, or Hydrology _____ significantly disturbed? Are "Normal Circumstances" present? Yes X No _____

Are Vegetation _____, Soil _____, or Hydrology _____ naturally problematic? (If needed, explain any answers in Remarks.)

SUMMARY OF FINDINGS – Attach site map showing sampling point locations, transects, important features, etc.

Hydrophytic Vegetation Present?	Yes X	No _____	**Is the Sampled Area within a Wetland?** **Yes** X **No** _____
Hydric Soil Present?	Yes X	No _____	
Wetland Hydrology Present?	Yes X	No _____	

Remarks:

VEGETATION – Use scientific names of plants.

Tree Stratum (Plot size: 30' x 30')	Absolute % Cover	Dominant Species?	Indicator Status
1.			
2.			
3.			
4.			
	_____ = Total Cover		
Sapling/Shrub Stratum (Plot size: 15' x 15')			
1.			
2.			
3.			
4.			
5.			
	_____ = Total Cover		
Herb Stratum (Plot size: 5' x 5')			
1. Cirsium arvense	30	Yes	FAC
2. Typha x glauca	20	Yes	OBL
3. Juncus tenuis	15	No	FAC
4. Mentha arvensis	10	No	FACW
5. Persicaria amphibia	10	No	OBL
6. Calamagrostis canadensis	5	No	FACW
7. Geum allepicum	5	No	FACW
8. Verbascum thapsus	5	No	FACU
9.			
10.			
11.			
	100 = Total Cover		
Woody Vine Stratum (Plot size: 30' x 30')			
1.			
2.			
	_____ = Total Cover		

% Bare Ground in Herb Stratum 0

Dominance Test worksheet:

Number of Dominant Species That Are OBL, FACW, or FAC: 2 (A)

Total Number of Dominant Species Across All Strata: 2 (B)

Percent of Dominant Species That Are OBL, FACW, or FAC: 100 (A/B)

Prevalence Index worksheet:

Total % Cover of:	Multiply by:
OBL species _____	x 1 = _____
FACW species _____	x 2 = _____
FAC species _____	x 3 = _____
FACU species _____	x 4 = _____
UPL species _____	x 5 = _____
Column Totals: _____ (A)	_____ (B)

Prevalence Index = B/A = _____

Hydrophytic Vegetation Indicators:

- ___ 1 - Rapid Test for Hydrophytic Vegetation
- X 2 - Dominance Test is >50%
- ___ 3 - Prevalence Index is ≤3.0[1]
- ___ 4 - Morphological Adaptations[1] (Provide supporting data in Remarks or on a separate sheet)
- ___ 5 - Wetland Non-Vascular Plants[1]
- ___ Problematic Hydrophytic Vegetation[1] (Explain)

[1]Indicators of hydric soil and wetland hydrology must be present, unless disturbed or problematic.

Hydrophytic Vegetation Present? **Yes** X **No** _____

Remarks:

SOIL

Sampling Point: A Wet

Profile Description: (Describe to the depth needed to document the indicator or confirm the absence of indicators.)

Depth (inches)	Matrix Color (moist)	Matrix %	Redox Features Color (moist)	Redox %	Type[1]	Loc[2]	Texture	Remarks
0-14	10YR 4/1	95	7.5YR 3/4	5	C	PL	silt loam	
14-24	10YR 4/1	90	7.5YR 3/4	10	C	M	sand	

[1]Type: C=Concentration, D=Depletion, RM=Reduced Matrix, CS=Covered or Coated Sand Grains. [2]Location: PL=Pore Lining, M=Matrix.

Hydric Soil Indicators: (Applicable to all LRRs, unless otherwise noted.)

- ___ Histosol (A1)
- ___ Histic Epipedon (A2)
- ___ Black Histic (A3)
- ___ Hydrogen Sulfide (A4)
- ___ Depleted Below Dark Surface (A11)
- ___ Thick Dark Surface (A12)
- ___ Sandy Mucky Mineral (S1)
- ___ Sandy Gleyed Matrix (S4)
- ___ Sandy Redox (S5)
- ___ Stripped Matrix (S6)
- ___ Loamy Mucky Mineral (F1) (**except MLRA 1**)
- ___ Loamy Gleyed Matrix (F2)
- ___ Depleted Matrix (F3)
- X Redox Dark Surface (F6)
- ___ Depleted Dark Surface (F7)
- ___ Redox Depressions (F8)

Indicators for Problematic Hydric Soils[3]:

- ___ 2 cm Muck (A10)
- ___ Red Parent Material (TF2)
- ___ Very Shallow Dark Surface (TF12)
- ___ Other (Explain in Remarks)

[3]Indicators of hydrophytic vegetation and wetland hydrology must be present, unless disturbed or problematic.

Restrictive Layer (if present):

Type: _____

Depth (inches): _____

Hydric Soil Present? **Yes** X **No** ___

Remarks:

HYDROLOGY

Wetland Hydrology Indicators:

Primary Indicators (minimum of one required; check all that apply)

- ___ Surface Water (A1)
- ___ High Water Table (A2)
- X Saturation (A3)
- ___ Water Marks (B1)
- ___ Sediment Deposits (B2)
- ___ Drift Deposits (B3)
- ___ Algal Mat or Crust (B4)
- ___ Iron Deposits (B5)
- ___ Surface Soil Cracks (B6)
- ___ Inundation Visible on Aerial Imagery (B7)
- ___ Sparsely Vegetated Concave Surface (B8)
- ___ Water-Stained Leaves (B9) (**except MLRA 1, 2, 4A, and 4B**)
- ___ Salt Crust (B11)
- ___ Aquatic Invertebrates (B13)
- X Hydrogen Sulfide Odor (C1)
- ___ Oxidized Rhizospheres along Living Roots (C3)
- ___ Presence of Reduced Iron (C4)
- ___ Recent Iron Reduction in Tilled Soils (C6)
- ___ Stunted or Stressed Plants (D1) (**LRR A**)
- ___ Other (Explain in Remarks)

Secondary Indicators (2 or more required)

- ___ Water-Stained Leaves (B9) (**MLRA 1, 2, 4A, and 4B**)
- X Drainage Patterns (B10)
- ___ Dry-Season Water Table (C2)
- ___ Saturation Visible on Aerial Imagery (C9)
- X Geomorphic Position (D2)
- ___ Shallow Aquitard (D3)
- X FAC-Neutral Test (D5)
- ___ Raised Ant Mounds (D6) (**LRR A**)
- ___ Frost-Heave Hummocks (D7)

Field Observations:

Surface Water Present? Yes ___ No X Depth (inches): _____

Water Table Present? Yes ___ No X Depth (inches): _____

Saturation Present? (includes capillary fringe) Yes X No ___ Depth (inches): 0

Wetland Hydrology Present? **Yes** X **No** ___

Describe Recorded Data (stream gauge, monitoring well, aerial photos, previous inspections), if available:

Remarks:

WETLAND DETERMINATION DATA FORM – Western Mountains, Valleys, and Coast Region

Project/Site: Monument Ridge East Development City/County: Woodmoor/ El Paso Sampling Date: 8/26/2021

Applicant/Owner: Monument Ridge East, LLC State: CO Sampling Point: A Up

Investigator(s): WSB (Shawn Williams) Section, Township, Range: Sec. 2, T11S, R67W

Landform (hillslope, terrace, etc.): hillslope Local relief (concave, convex, none): none Slope (%): 5

Subregion (LRR): E Lat: 39.128710 Long: -104.860271 Datum: WGS 84

Soil Map Unit Name: Alamosa loam, 1 to 3 percent slopes (1) NWI classification: _____

Are climatic / hydrologic conditions on the site typical for this time of year? Yes X No _____ (If no, explain in Remarks.)

Are Vegetation _____, Soil _____, or Hydrology _____ significantly disturbed? Are "Normal Circumstances" present? Yes X No _____

Are Vegetation _____, Soil _____, or Hydrology _____ naturally problematic? (If needed, explain any answers in Remarks.)

SUMMARY OF FINDINGS – Attach site map showing sampling point locations, transects, important features, etc.

Hydrophytic Vegetation Present?	Yes _____	No X	**Is the Sampled Area within a Wetland?** **Yes** _____ **No** X
Hydric Soil Present?	Yes _____	No X	
Wetland Hydrology Present?	Yes _____	No X	

Remarks:

VEGETATION – Use scientific names of plants.

Tree Stratum (Plot size: 30' x 30')	Absolute % Cover	Dominant Species?	Indicator Status
1.			
2.			
3.			
4.			
	_____ = Total Cover		
Sapling/Shrub Stratum (Plot size: 15' x 15')			
1.			
2.			
3.			
4.			
5.			
	_____ = Total Cover		
Herb Stratum (Plot size: 5' x 5')			
1. Bromus inermis	30	Yes	UPL
2. Agrostis gigantea	30	Yes	FAC
3. Cirsium arvense	15	No	FAC
4. Geum macrophyllum	15	No	FAC
5. Juncus tenuis	5	No	FAC
6. Achillea millefolium	5	No	FACU
7.			
8.			
9.			
10.			
11.			
	100 = Total Cover		
Woody Vine Stratum (Plot size: 30' x 30')			
1.			
2.			
	_____ = Total Cover		

% Bare Ground in Herb Stratum 0

Dominance Test worksheet:

Number of Dominant Species That Are OBL, FACW, or FAC: 1 (A)

Total Number of Dominant Species Across All Strata: 2 (B)

Percent of Dominant Species That Are OBL, FACW, or FAC: 50 (A/B)

Prevalence Index worksheet:

Total % Cover of:		Multiply by:	
OBL species		x 1 =	
FACW species		x 2 =	
FAC species	65	x 3 =	195
FACU species	5	x 4 =	20
UPL species	30	x 5 =	150
Column Totals:	100 (A)		365 (B)

Prevalence Index = B/A = 3.65

Hydrophytic Vegetation Indicators:

___ 1 - Rapid Test for Hydrophytic Vegetation

___ 2 - Dominance Test is >50%

___ 3 - Prevalence Index is ≤3.0[1]

___ 4 - Morphological Adaptations[1] (Provide supporting data in Remarks or on a separate sheet)

___ 5 - Wetland Non-Vascular Plants[1]

___ Problematic Hydrophytic Vegetation[1] (Explain)

[1]Indicators of hydric soil and wetland hydrology must be present, unless disturbed or problematic.

Hydrophytic Vegetation Present? **Yes** _____ **No** X

Remarks:

SOIL

Sampling Point: A Up

Profile Description: (Describe to the depth needed to document the indicator or confirm the absence of indicators.)

Depth (inches)	Matrix Color (moist)	Matrix %	Redox Features Color (moist)	Redox %	Type[1]	Loc[2]	Texture	Remarks
0-16	10YR 3/2	100					silt loam	

[1]Type: C=Concentration, D=Depletion, RM=Reduced Matrix, CS=Covered or Coated Sand Grains. [2]Location: PL=Pore Lining, M=Matrix.

Hydric Soil Indicators: (Applicable to all LRRs, unless otherwise noted.)

___ Histosol (A1)
___ Histic Epipedon (A2)
___ Black Histic (A3)
___ Hydrogen Sulfide (A4)
___ Depleted Below Dark Surface (A11)
___ Thick Dark Surface (A12)
___ Sandy Mucky Mineral (S1)
___ Sandy Gleyed Matrix (S4)
___ Sandy Redox (S5)
___ Stripped Matrix (S6)
___ Loamy Mucky Mineral (F1) (**except MLRA 1**)
___ Loamy Gleyed Matrix (F2)
___ Depleted Matrix (F3)
___ Redox Dark Surface (F6)
___ Depleted Dark Surface (F7)
___ Redox Depressions (F8)

Indicators for Problematic Hydric Soils[3]:

___ 2 cm Muck (A10)
___ Red Parent Material (TF2)
___ Very Shallow Dark Surface (TF12)
___ Other (Explain in Remarks)

[3]Indicators of hydrophytic vegetation and wetland hydrology must be present, unless disturbed or problematic.

Restrictive Layer (if present):

Type: refusal

Depth (inches): 16

Hydric Soil Present? **Yes** _____ **No** X

Remarks:

HYDROLOGY

Wetland Hydrology Indicators:

Primary Indicators (minimum of one required; check all that apply)

___ Surface Water (A1)
___ High Water Table (A2)
___ Saturation (A3)
___ Water Marks (B1)
___ Sediment Deposits (B2)
___ Drift Deposits (B3)
___ Algal Mat or Crust (B4)
___ Iron Deposits (B5)
___ Surface Soil Cracks (B6)
___ Inundation Visible on Aerial Imagery (B7)
___ Sparsely Vegetated Concave Surface (B8)
___ Water-Stained Leaves (B9) (**except MLRA 1, 2, 4A, and 4B)**
___ Salt Crust (B11)
___ Aquatic Invertebrates (B13)
___ Hydrogen Sulfide Odor (C1)
___ Oxidized Rhizospheres along Living Roots (C3)
___ Presence of Reduced Iron (C4)
___ Recent Iron Reduction in Tilled Soils (C6)
___ Stunted or Stressed Plants (D1) (**LRR A**)
___ Other (Explain in Remarks)

Secondary Indicators (2 or more required)

___ Water-Stained Leaves (B9) (**MLRA 1, 2, 4A, and 4B)**
___ Drainage Patterns (B10)
___ Dry-Season Water Table (C2)
___ Saturation Visible on Aerial Imagery (C9)
___ Geomorphic Position (D2)
___ Shallow Aquitard (D3)
___ FAC-Neutral Test (D5)
___ Raised Ant Mounds (D6) (**LRR A**)
___ Frost-Heave Hummocks (D7)

Field Observations:

Surface Water Present? Yes _____ No X Depth (inches): _____

Water Table Present? Yes _____ No X Depth (inches): _____

Saturation Present? (includes capillary fringe) Yes _____ No X Depth (inches): _____

Wetland Hydrology Present? **Yes** _____ **No** X

Describe Recorded Data (stream gauge, monitoring well, aerial photos, previous inspections), if available:

Remarks:

WETLAND DETERMINATION DATA FORM – Western Mountains, Valleys, and Coast Region

Project/Site: Monument Ridge East Development City/County: Woodmoor/ El Paso Sampling Date: 8/26/2021

Applicant/Owner: Monument Ridge East, LLC State: CO Sampling Point: B Wet

Investigator(s): WSB (Shawn Williams) Section, Township, Range: Sec. 2, T11S, R67W

Landform (hillslope, terrace, etc.): hillslope Local relief (concave, convex, none): concave Slope (%): 4

Subregion (LRR): E Lat: 39.129093 Long: -104.862403 Datum: WGS 84

Soil Map Unit Name: Alamosa loam, 1 to 3 percent slopes (1) NWI classification: PEM1C, R4SBC

Are climatic / hydrologic conditions on the site typical for this time of year? Yes X No _____ (If no, explain in Remarks.)

Are Vegetation _____, Soil _____, or Hydrology _____ significantly disturbed? Are "Normal Circumstances" present? Yes X No _____

Are Vegetation _____, Soil _____, or Hydrology _____ naturally problematic? (If needed, explain any answers in Remarks.)

SUMMARY OF FINDINGS – Attach site map showing sampling point locations, transects, important features, etc.

Hydrophytic Vegetation Present?	Yes X	No _____	**Is the Sampled Area within a Wetland?** **Yes** X **No** _____
Hydric Soil Present?	Yes X	No _____	
Wetland Hydrology Present?	Yes X	No _____	

Remarks:

VEGETATION – Use scientific names of plants.

Tree Stratum (Plot size: 30' x 30')	Absolute % Cover	Dominant Species?	Indicator Status
1.			
2.			
3.			
4.			
	_____ = Total Cover		
Sapling/Shrub Stratum (Plot size: 15' x 15')			
1.			
2.			
3.			
4.			
5.			
	_____ = Total Cover		
Herb Stratum (Plot size: 5' x 5')			
1. Calamagrostis canadensis	75	Yes	FACW
2. Cirsium arvense	20	Yes	FAC
3.			
4.			
5.			
6.			
7.			
8.			
9.			
10.			
11.			
	95 = Total Cover		
Woody Vine Stratum (Plot size: 30' x 30')			
1.			
2.			
	_____ = Total Cover		

% Bare Ground in Herb Stratum 5

Dominance Test worksheet:

Number of Dominant Species That Are OBL, FACW, or FAC: 2 (A)

Total Number of Dominant Species Across All Strata: 2 (B)

Percent of Dominant Species That Are OBL, FACW, or FAC: 100 (A/B)

Prevalence Index worksheet:

Total % Cover of:	Multiply by:
OBL species _____	x 1 = _____
FACW species _____	x 2 = _____
FAC species _____	x 3 = _____
FACU species _____	x 4 = _____
UPL species _____	x 5 = _____
Column Totals: _____ (A)	_____ (B)

Prevalence Index = B/A = _____

Hydrophytic Vegetation Indicators:

- ___ 1 - Rapid Test for Hydrophytic Vegetation
- X 2 - Dominance Test is >50%
- ___ 3 - Prevalence Index is ≤3.0[1]
- ___ 4 - Morphological Adaptations[1] (Provide supporting data in Remarks or on a separate sheet)
- ___ 5 - Wetland Non-Vascular Plants[1]
- ___ Problematic Hydrophytic Vegetation[1] (Explain)

[1]Indicators of hydric soil and wetland hydrology must be present, unless disturbed or problematic.

Hydrophytic Vegetation Present? **Yes** X **No** _____

Remarks:

SOIL

Sampling Point: B Wet

Profile Description: (Describe to the depth needed to document the indicator or confirm the absence of indicators.)

Depth (inches)	Matrix Color (moist)	Matrix %	Redox Features Color (moist)	Redox %	Type[1]	Loc[2]	Texture	Remarks
0-15	10YR 4/1	95	7.5YR 3/4	5	C	PL	silt loam	

[1]Type: C=Concentration, D=Depletion, RM=Reduced Matrix, CS=Covered or Coated Sand Grains. [2]Location: PL=Pore Lining, M=Matrix.

Hydric Soil Indicators: (Applicable to all LRRs, unless otherwise noted.)

___ Histosol (A1)
___ Histic Epipedon (A2)
___ Black Histic (A3)
___ Hydrogen Sulfide (A4)
___ Depleted Below Dark Surface (A11)
___ Thick Dark Surface (A12)
___ Sandy Mucky Mineral (S1)
___ Sandy Gleyed Matrix (S4)
___ Sandy Redox (S5)
___ Stripped Matrix (S6)
___ Loamy Mucky Mineral (F1) (**except MLRA 1**)
___ Loamy Gleyed Matrix (F2)
___ Depleted Matrix (F3)
___ Redox Dark Surface (F6)
___ Depleted Dark Surface (F7)
X Redox Depressions (F8)

Indicators for Problematic Hydric Soils[3]:

___ 2 cm Muck (A10)
___ Red Parent Material (TF2)
___ Very Shallow Dark Surface (TF12)
___ Other (Explain in Remarks)

[3]Indicators of hydrophytic vegetation and wetland hydrology must be present, unless disturbed or problematic.

Restrictive Layer (if present):

Type: _____

Depth (inches): _____

Hydric Soil Present? **Yes** X **No** ___

Remarks:

HYDROLOGY

Wetland Hydrology Indicators:

Primary Indicators (minimum of one required; check all that apply)

___ Surface Water (A1)
___ High Water Table (A2)
___ Saturation (A3)
___ Water Marks (B1)
___ Sediment Deposits (B2)
___ Drift Deposits (B3)
___ Algal Mat or Crust (B4)
___ Iron Deposits (B5)
___ Surface Soil Cracks (B6)
___ Inundation Visible on Aerial Imagery (B7)
___ Sparsely Vegetated Concave Surface (B8)
___ Water-Stained Leaves (B9) (**except MLRA 1, 2, 4A, and 4B**)
___ Salt Crust (B11)
___ Aquatic Invertebrates (B13)
___ Hydrogen Sulfide Odor (C1)
X Oxidized Rhizospheres along Living Roots (C3)
___ Presence of Reduced Iron (C4)
___ Recent Iron Reduction in Tilled Soils (C6)
___ Stunted or Stressed Plants (D1) (**LRR A**)
___ Other (Explain in Remarks)

Secondary Indicators (2 or more required)

___ Water-Stained Leaves (B9) (**MLRA 1, 2, 4A, and 4B**)
___ Drainage Patterns (B10)
___ Dry-Season Water Table (C2)
___ Saturation Visible on Aerial Imagery (C9)
X Geomorphic Position (D2)
___ Shallow Aquitard (D3)
X FAC-Neutral Test (D5)
___ Raised Ant Mounds (D6) (**LRR A**)
___ Frost-Heave Hummocks (D7)

Field Observations:

Surface Water Present? Yes ___ No X Depth (inches): _____

Water Table Present? Yes ___ No X Depth (inches): _____

Saturation Present? (includes capillary fringe) Yes ___ No X Depth (inches): _____

Wetland Hydrology Present? **Yes** X **No** ___

Describe Recorded Data (stream gauge, monitoring well, aerial photos, previous inspections), if available:

Remarks:

WETLAND DETERMINATION DATA FORM – Western Mountains, Valleys, and Coast Region

Project/Site: Monument Ridge East Development City/County: Woodmoor/ El Paso Sampling Date: 8/26/2021

Applicant/Owner: Monument Ridge East, LLC State: CO Sampling Point: B Up

Investigator(s): WSB (Shawn Williams) Section, Township, Range: Sec. 2, T11S, R67W

Landform (hillslope, terrace, etc.): hillslope Local relief (concave, convex, none): convex Slope (%): 5

Subregion (LRR): E Lat: 39.129093 Long: -104.862403 Datum: WGS 84

Soil Map Unit Name: Alamosa loam, 1 to 3 percent slopes (1) NWI classification: _____

Are climatic / hydrologic conditions on the site typical for this time of year? Yes X No _____ (If no, explain in Remarks.)

Are Vegetation _____, Soil _____, or Hydrology _____ significantly disturbed? Are "Normal Circumstances" present? Yes X No _____

Are Vegetation _____, Soil _____, or Hydrology _____ naturally problematic? (If needed, explain any answers in Remarks.)

SUMMARY OF FINDINGS – Attach site map showing sampling point locations, transects, important features, etc.

Hydrophytic Vegetation Present?	Yes _____	No X	**Is the Sampled Area within a Wetland?** **Yes** _____ **No** X
Hydric Soil Present?	Yes _____	No X	
Wetland Hydrology Present?	Yes _____	No X	

Remarks:

VEGETATION – Use scientific names of plants.

Tree Stratum (Plot size: 30' x 30')	Absolute % Cover	Dominant Species?	Indicator Status
1.			
2.			
3.			
4.			
	_____ = Total Cover		
Sapling/Shrub Stratum (Plot size: 15' x 15')			
1.			
2.			
3.			
4.			
5.			
	_____ = Total Cover		
Herb Stratum (Plot size: 5' x 5')			
1. Bromus inermis	60	Yes	UPL
2. Achillea millefolium	20	Yes	FACU
3. Symphyotrichum ericoides	5	No	FAC
4.			
5.			
6.			
7.			
8.			
9.			
10.			
11.			
	85 = Total Cover		
Woody Vine Stratum (Plot size: 30' x 30')			
1.			
2.			
	_____ = Total Cover		

% Bare Ground in Herb Stratum _____

Dominance Test worksheet:

Number of Dominant Species That Are OBL, FACW, or FAC: 0 (A)

Total Number of Dominant Species Across All Strata: 2 (B)

Percent of Dominant Species That Are OBL, FACW, or FAC: 0 (A/B)

Prevalence Index worksheet:

Total % Cover of:	Multiply by:
OBL species _____	x 1 = _____
FACW species _____	x 2 = _____
FAC species _____	x 3 = _____
FACU species _____	x 4 = _____
UPL species _____	x 5 = _____
Column Totals: _____ (A)	_____ (B)

Prevalence Index = B/A = _____

Hydrophytic Vegetation Indicators:

___ 1 - Rapid Test for Hydrophytic Vegetation

___ 2 - Dominance Test is >50%

___ 3 - Prevalence Index is ≤3.0[1]

___ 4 - Morphological Adaptations[1] (Provide supporting data in Remarks or on a separate sheet)

___ 5 - Wetland Non-Vascular Plants[1]

___ Problematic Hydrophytic Vegetation[1] (Explain)

[1]Indicators of hydric soil and wetland hydrology must be present, unless disturbed or problematic.

Hydrophytic Vegetation Present? **Yes** _____ **No** X

Remarks:

SOIL

Sampling Point: B Up

Profile Description: (Describe to the depth needed to document the indicator or confirm the absence of indicators.)

Depth (inches)	Matrix Color (moist)	Matrix %	Redox Features Color (moist)	Redox %	Type[1]	Loc[2]	Texture	Remarks
0-7	10YR 5/3						silt	

[1]Type: C=Concentration, D=Depletion, RM=Reduced Matrix, CS=Covered or Coated Sand Grains. [2]Location: PL=Pore Lining, M=Matrix.

Hydric Soil Indicators: (Applicable to all LRRs, unless otherwise noted.)

___ Histosol (A1)
___ Histic Epipedon (A2)
___ Black Histic (A3)
___ Hydrogen Sulfide (A4)
___ Depleted Below Dark Surface (A11)
___ Thick Dark Surface (A12)
___ Sandy Mucky Mineral (S1)
___ Sandy Gleyed Matrix (S4)
___ Sandy Redox (S5)
___ Stripped Matrix (S6)
___ Loamy Mucky Mineral (F1) (**except MLRA 1**)
___ Loamy Gleyed Matrix (F2)
___ Depleted Matrix (F3)
___ Redox Dark Surface (F6)
___ Depleted Dark Surface (F7)
___ Redox Depressions (F8)

Indicators for Problematic Hydric Soils[3]:

___ 2 cm Muck (A10)
___ Red Parent Material (TF2)
___ Very Shallow Dark Surface (TF12)
___ Other (Explain in Remarks)

[3]Indicators of hydrophytic vegetation and wetland hydrology must be present, unless disturbed or problematic.

Restrictive Layer (if present):

Type: refusal

Depth (inches): 7

Hydric Soil Present? **Yes** _____ **No** X

Remarks:

HYDROLOGY

Wetland Hydrology Indicators:

Primary Indicators (minimum of one required; check all that apply)

___ Surface Water (A1)
___ High Water Table (A2)
___ Saturation (A3)
___ Water Marks (B1)
___ Sediment Deposits (B2)
___ Drift Deposits (B3)
___ Algal Mat or Crust (B4)
___ Iron Deposits (B5)
___ Surface Soil Cracks (B6)
___ Inundation Visible on Aerial Imagery (B7)
___ Sparsely Vegetated Concave Surface (B8)
___ Water-Stained Leaves (B9) (**except MLRA 1, 2, 4A, and 4B)**
___ Salt Crust (B11)
___ Aquatic Invertebrates (B13)
___ Hydrogen Sulfide Odor (C1)
___ Oxidized Rhizospheres along Living Roots (C3)
___ Presence of Reduced Iron (C4)
___ Recent Iron Reduction in Tilled Soils (C6)
___ Stunted or Stressed Plants (D1) (**LRR A**)
___ Other (Explain in Remarks)

Secondary Indicators (2 or more required)

___ Water-Stained Leaves (B9) (**MLRA 1, 2, 4A, and 4B)**
___ Drainage Patterns (B10)
___ Dry-Season Water Table (C2)
___ Saturation Visible on Aerial Imagery (C9)
___ Geomorphic Position (D2)
___ Shallow Aquitard (D3)
___ FAC-Neutral Test (D5)
___ Raised Ant Mounds (D6) (**LRR A**)
___ Frost-Heave Hummocks (D7)

Field Observations:

Surface Water Present? Yes _____ No X Depth (inches): _____

Water Table Present? Yes _____ No X Depth (inches): _____

Saturation Present? (includes capillary fringe) Yes _____ No X Depth (inches): _____

Wetland Hydrology Present? **Yes** _____ **No** X

Describe Recorded Data (stream gauge, monitoring well, aerial photos, previous inspections), if available:

Remarks:

WETLAND DETERMINATION DATA FORM – Western Mountains, Valleys, and Coast Region

Project/Site: Monument Ridge East Development City/County: Woodmoor/ El Paso Sampling Date: 8/26/2021

Applicant/Owner: Monument Ridge East, LLC State: CO Sampling Point: 1 Up

Investigator(s): WSB (Shawn Williams) Section, Township, Range: Sec. 2, T11S, R67W

Landform (hillslope, terrace, etc.): hillslope Local relief (concave, convex, none): concave Slope (%): 4

Subregion (LRR): E Lat: 39.128056 Long: -104.860204 Datum: WGS 84

Soil Map Unit Name: Alamosa loam, 1 to 3 percent slopes (1) NWI classification: PEM1C/R4SBC

Are climatic / hydrologic conditions on the site typical for this time of year? Yes X No _____ (If no, explain in Remarks.)

Are Vegetation _____, Soil _____, or Hydrology _____ significantly disturbed? Are "Normal Circumstances" present? Yes X No _____

Are Vegetation _____, Soil _____, or Hydrology _____ naturally problematic? (If needed, explain any answers in Remarks.)

SUMMARY OF FINDINGS – Attach site map showing sampling point locations, transects, important features, etc.

Hydrophytic Vegetation Present?	Yes _____	No X	**Is the Sampled Area within a Wetland?** **Yes** _____ **No** X
Hydric Soil Present?	Yes X	No _____	
Wetland Hydrology Present?	Yes _____	No X	

Remarks:

VEGETATION – Use scientific names of plants.

Tree Stratum (Plot size: 30' x 30')	Absolute % Cover	Dominant Species?	Indicator Status
1.			
2.			
3.			
4.			
	_____ = Total Cover		
Sapling/Shrub Stratum (Plot size: 15' x 15')			
1.			
2.			
3.			
4.			
5.			
	_____ = Total Cover		
Herb Stratum (Plot size: 5' x 5')			
1. Bromus inermis	70	Yes	UPL
2. Cirsium arvense	30	Yes	FAC
3.			
4.			
5.			
6.			
7.			
8.			
9.			
10.			
11.			
	100 = Total Cover		
Woody Vine Stratum (Plot size: 30' x 30')			
1.			
2.			
	_____ = Total Cover		

% Bare Ground in Herb Stratum 0

Dominance Test worksheet:

Number of Dominant Species That Are OBL, FACW, or FAC: 1 (A)

Total Number of Dominant Species Across All Strata: 2 (B)

Percent of Dominant Species That Are OBL, FACW, or FAC: 50 (A/B)

Prevalence Index worksheet:

Total % Cover of:		Multiply by:	
OBL species		x 1 =	
FACW species		x 2 =	
FAC species	30	x 3 =	90
FACU species		x 4 =	
UPL species	70	x 5 =	350
Column Totals:	100 (A)		440 (B)

Prevalence Index = B/A = 4.4

Hydrophytic Vegetation Indicators:

___ 1 - Rapid Test for Hydrophytic Vegetation

___ 2 - Dominance Test is >50%

___ 3 - Prevalence Index is ≤3.0[1]

___ 4 - Morphological Adaptations[1] (Provide supporting data in Remarks or on a separate sheet)

___ 5 - Wetland Non-Vascular Plants[1]

___ Problematic Hydrophytic Vegetation[1] (Explain)

[1]Indicators of hydric soil and wetland hydrology must be present, unless disturbed or problematic.

Hydrophytic Vegetation Present? **Yes** _____ **No** X

Remarks:

SOIL

Sampling Point: 1 Up

Profile Description: (Describe to the depth needed to document the indicator or confirm the absence of indicators.)

Depth (inches)	Matrix Color (moist)	Matrix %	Redox Features Color (moist)	Redox %	Type[1]	Loc[2]	Texture	Remarks
0-8	10YR 3/2	90	10YR 4/6	10	C	M	silt loam	
8-24	10YR 4/2	80	10YR 4/6	20	C	M	sand	

[1]Type: C=Concentration, D=Depletion, RM=Reduced Matrix, CS=Covered or Coated Sand Grains. [2]Location: PL=Pore Lining, M=Matrix.

Hydric Soil Indicators: (Applicable to all LRRs, unless otherwise noted.)

___ Histosol (A1)
___ Histic Epipedon (A2)
___ Black Histic (A3)
___ Hydrogen Sulfide (A4)
___ Depleted Below Dark Surface (A11)
___ Thick Dark Surface (A12)
___ Sandy Mucky Mineral (S1)
___ Sandy Gleyed Matrix (S4)
___ Sandy Redox (S5)
___ Stripped Matrix (S6)
___ Loamy Mucky Mineral (F1) (**except MLRA 1**)
___ Loamy Gleyed Matrix (F2)
___ Depleted Matrix (F3)
X Redox Dark Surface (F6)
___ Depleted Dark Surface (F7)
___ Redox Depressions (F8)

Indicators for Problematic Hydric Soils[3]:

___ 2 cm Muck (A10)
___ Red Parent Material (TF2)
___ Very Shallow Dark Surface (TF12)
___ Other (Explain in Remarks)

[3]Indicators of hydrophytic vegetation and wetland hydrology must be present, unless disturbed or problematic.

Restrictive Layer (if present):

Type: _____

Depth (inches): _____

Hydric Soil Present? **Yes** X **No** ___

Remarks:

HYDROLOGY

Wetland Hydrology Indicators:

Primary Indicators (minimum of one required; check all that apply)

___ Surface Water (A1)
___ High Water Table (A2)
___ Saturation (A3)
___ Water Marks (B1)
___ Sediment Deposits (B2)
___ Drift Deposits (B3)
___ Algal Mat or Crust (B4)
___ Iron Deposits (B5)
___ Surface Soil Cracks (B6)
___ Inundation Visible on Aerial Imagery (B7)
___ Sparsely Vegetated Concave Surface (B8)
___ Water-Stained Leaves (B9) (**except MLRA 1, 2, 4A, and 4B)**
___ Salt Crust (B11)
___ Aquatic Invertebrates (B13)
___ Hydrogen Sulfide Odor (C1)
___ Oxidized Rhizospheres along Living Roots (C3)
___ Presence of Reduced Iron (C4)
___ Recent Iron Reduction in Tilled Soils (C6)
___ Stunted or Stressed Plants (D1) (**LRR A**)
___ Other (Explain in Remarks)

Secondary Indicators (2 or more required)

___ Water-Stained Leaves (B9) (**MLRA 1, 2, 4A, and 4B)**
___ Drainage Patterns (B10)
___ Dry-Season Water Table (C2)
___ Saturation Visible on Aerial Imagery (C9)
X Geomorphic Position (D2)
___ Shallow Aquitard (D3)
___ FAC-Neutral Test (D5)
___ Raised Ant Mounds (D6) (**LRR A**)
___ Frost-Heave Hummocks (D7)

Field Observations:

Surface Water Present? Yes ___ No X Depth (inches): _____

Water Table Present? Yes ___ No X Depth (inches): _____

Saturation Present? (includes capillary fringe) Yes ___ No X Depth (inches): _____

Wetland Hydrology Present? **Yes** ___ **No** X

Describe Recorded Data (stream gauge, monitoring well, aerial photos, previous inspections), if available:

Remarks:

WETLAND DETERMINATION DATA FORM – Western Mountains, Valleys, and Coast Region

Project/Site: Monument Ridge East Development City/County: Woodmoor/ El Paso Sampling Date: 8/26/2021

Applicant/Owner: Monument Ridge East, LLC State: CO Sampling Point: 2 Up

Investigator(s): WSB (Shawn Williams) Section, Township, Range: Sec. 2, T11S, R67W

Landform (hillslope, terrace, etc.): hillslope Local relief (concave, convex, none): concave Slope (%): 3

Subregion (LRR): E Lat: 39.127965 Long: -104.863266 Datum: WGS 84

Soil Map Unit Name: Alamosa loam, 1 to 3 percent slopes (1) NWI classification: PEM1C/R4SBC

Are climatic / hydrologic conditions on the site typical for this time of year? Yes X No _____ (If no, explain in Remarks.)

Are Vegetation _____, Soil _____, or Hydrology _____ significantly disturbed? Are "Normal Circumstances" present? Yes X No _____

Are Vegetation _____, Soil _____, or Hydrology _____ naturally problematic? (If needed, explain any answers in Remarks.)

SUMMARY OF FINDINGS – Attach site map showing sampling point locations, transects, important features, etc.

Hydrophytic Vegetation Present?	Yes X	No _____	**Is the Sampled Area within a Wetland?** **Yes** _____ **No** X
Hydric Soil Present?	Yes _____	No X	
Wetland Hydrology Present?	Yes _____	No X	

Remarks:

VEGETATION – Use scientific names of plants.

Tree Stratum (Plot size: 30' x 30')	Absolute % Cover	Dominant Species?	Indicator Status
1.			
2.			
3.			
4.			
	_____ = Total Cover		
Sapling/Shrub Stratum (Plot size: 15' x 15')			
1.			
2.			
3.			
4.			
5.			
	_____ = Total Cover		
Herb Stratum (Plot size: 5' x 5')			
1. Juncus tenuis	70	Yes	FAC
2. Cirsium arvense	20	Yes	FAC
3. Salix interior	10	No	FACW
4.			
5.			
6.			
7.			
8.			
9.			
10.			
11.			
	100 = Total Cover		
Woody Vine Stratum (Plot size: 30' x 30')			
1.			
2.			
	_____ = Total Cover		

% Bare Ground in Herb Stratum 0

Dominance Test worksheet:

Number of Dominant Species That Are OBL, FACW, or FAC: 2 (A)

Total Number of Dominant Species Across All Strata: 2 (B)

Percent of Dominant Species That Are OBL, FACW, or FAC: 100 (A/B)

Prevalence Index worksheet:

Total % Cover of:	Multiply by:
OBL species _____	x 1 = _____
FACW species _____	x 2 = _____
FAC species _____	x 3 = _____
FACU species _____	x 4 = _____
UPL species _____	x 5 = _____
Column Totals: _____ (A)	_____ (B)

Prevalence Index = B/A = _____

Hydrophytic Vegetation Indicators:

- ___ 1 - Rapid Test for Hydrophytic Vegetation
- X 2 - Dominance Test is >50%
- ___ 3 - Prevalence Index is ≤3.0[1]
- ___ 4 - Morphological Adaptations[1] (Provide supporting data in Remarks or on a separate sheet)
- ___ 5 - Wetland Non-Vascular Plants[1]
- ___ Problematic Hydrophytic Vegetation[1] (Explain)

[1]Indicators of hydric soil and wetland hydrology must be present, unless disturbed or problematic.

Hydrophytic Vegetation Present? **Yes** X **No** _____

Remarks:

SOIL

Sampling Point: 2 Up

Profile Description: (Describe to the depth needed to document the indicator or confirm the absence of indicators.)

Depth (inches)	Matrix Color (moist)	Matrix %	Redox Features Color (moist)	Redox %	Type[1]	Loc[2]	Texture	Remarks
0-14	10YR 4/1	100					loamy sand	

[1]Type: C=Concentration, D=Depletion, RM=Reduced Matrix, CS=Covered or Coated Sand Grains. [2]Location: PL=Pore Lining, M=Matrix.

Hydric Soil Indicators: (Applicable to all LRRs, unless otherwise noted.)

___ Histosol (A1)
___ Histic Epipedon (A2)
___ Black Histic (A3)
___ Hydrogen Sulfide (A4)
___ Depleted Below Dark Surface (A11)
___ Thick Dark Surface (A12)
___ Sandy Mucky Mineral (S1)
___ Sandy Gleyed Matrix (S4)
___ Sandy Redox (S5)
___ Stripped Matrix (S6)
___ Loamy Mucky Mineral (F1) (**except MLRA 1**)
___ Loamy Gleyed Matrix (F2)
___ Depleted Matrix (F3)
___ Redox Dark Surface (F6)
___ Depleted Dark Surface (F7)
___ Redox Depressions (F8)

Indicators for Problematic Hydric Soils[3]:

___ 2 cm Muck (A10)
___ Red Parent Material (TF2)
___ Very Shallow Dark Surface (TF12)
___ Other (Explain in Remarks)

[3]Indicators of hydrophytic vegetation and wetland hydrology must be present, unless disturbed or problematic.

Restrictive Layer (if present):

Type: refusal

Depth (inches): 14

Hydric Soil Present? **Yes** _____ **No** X

Remarks:

HYDROLOGY

Wetland Hydrology Indicators:

Primary Indicators (minimum of one required; check all that apply)

___ Surface Water (A1)
___ High Water Table (A2)
___ Saturation (A3)
___ Water Marks (B1)
___ Sediment Deposits (B2)
___ Drift Deposits (B3)
___ Algal Mat or Crust (B4)
___ Iron Deposits (B5)
___ Surface Soil Cracks (B6)
___ Inundation Visible on Aerial Imagery (B7)
___ Sparsely Vegetated Concave Surface (B8)
___ Water-Stained Leaves (B9) (**except MLRA 1, 2, 4A, and 4B)**
___ Salt Crust (B11)
___ Aquatic Invertebrates (B13)
___ Hydrogen Sulfide Odor (C1)
___ Oxidized Rhizospheres along Living Roots (C3)
___ Presence of Reduced Iron (C4)
___ Recent Iron Reduction in Tilled Soils (C6)
___ Stunted or Stressed Plants (D1) (**LRR A**)
___ Other (Explain in Remarks)

Secondary Indicators (2 or more required)

___ Water-Stained Leaves (B9) (**MLRA 1, 2, 4A, and 4B)**
___ Drainage Patterns (B10)
___ Dry-Season Water Table (C2)
___ Saturation Visible on Aerial Imagery (C9)
X Geomorphic Position (D2)
___ Shallow Aquitard (D3)
___ FAC-Neutral Test (D5)
___ Raised Ant Mounds (D6) (**LRR A**)
___ Frost-Heave Hummocks (D7)

Field Observations:

Surface Water Present? Yes _____ No X Depth (inches): _____

Water Table Present? Yes _____ No X Depth (inches): _____

Saturation Present? (includes capillary fringe) Yes _____ No X Depth (inches): _____

Wetland Hydrology Present? **Yes** _____ **No** X

Describe Recorded Data (stream gauge, monitoring well, aerial photos, previous inspections), if available:

Remarks:

APPENDIX C

Wetland Photos

APPENDIX

	Photo 1 – Sample Point 2 Up Date: 8/26/2021 Direction Photo is Taken: Southwest Photo Location: Near Sample Point 2 Up
	Photo 2 – Sample Point 2 Up Date: 8/26/2021 Direction Photo is Taken: Northeast Photo Location: Near Sample Point 2 Up
	Photo 3 – Wetland B Date: 8/26/2021 Direction Photo is Taken: Southwest Photo Location: Looking at Wetland B, from Storm structure.

	Photo 4 – Wetland A Date: 8/26/2021 Direction Photo is Taken: South Photo Location: Looking south from East Palmer Divide Road.

APPENDIX D

Antecedent Precipitation Data

Colorado

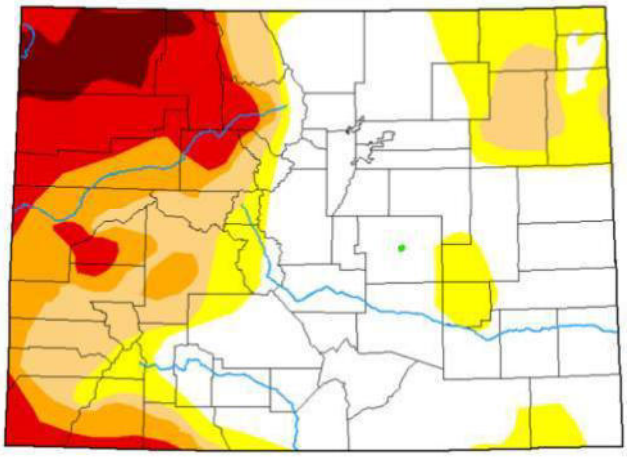

Map released: Thurs. August 26, 2021

Data valid: August 24, 2021 at 8 a.m. EDT

Intensity

- None
- D0 (Abnormally Dry)
- D1 (Moderate Drought)
- D2 (Severe Drought)
- D3 (Extreme Drought)
- D4 (Exceptional Drought)
- No Data

Authors

United States and Puerto Rico Author(s):
Curtis Riganti, National Drought Mitigation Center

Pacific Islands and Virgin Islands Author(s):
Brad Rippey, U.S. Department of Agriculture

USACE, Jurisdictional Determination Letter, Action No. SPA-2005-00679

DEPARTMENT OF THE ARMY
CORPS OF ENGINEERS, ALBUQUERQUE DISTRICT
400 ROOD AVENUE, ROOM 224
GRAND JUNCTION, COLORADO 81501-2520

March 22, 2022

Regulatory Division

SUBJECT: Jurisdictional Determination – Action No. SPA-2005-00679

Monument Ridge East, LLC
Attn: Don Cannella
5505 List Drive
Colorado Springs, CO 80919
donald.cannella@gmail.com

Dear Mr. Cannella:

This letter responds to your request for a jurisdictional determination (JD) for the property located on wetlands immediately southeast of the intersection of Interstate 25 and Palmer Divide Road, in the unincorporated community of Woodmoor, at latitude 39.1272, longitude -104.8606, in El Paso County, Colorado. We have assigned Action No. SPA-2005-00679 to your request. Please reference this number in all future correspondence concerning the site.

Based on the information provided, we have determined that the site contains waters of the United States that are subject to regulation under Section 404 of the Clean Water Act. The attached JD form contains a list of aquatic resources that are waters of the United States located within the subject property. If you intend to conduct work that could result in a discharge of dredged or fill material into waters of the United States, please contact this office for a determination of Department of the Army permit requirements and refer to Action No. SPA-2005-00679.

The basis for this approved JD (attached) is that the project site contains wetlands with a clear flow path into Relatively Permanent Waters (RPW), Carpenter, East Plum, and Plum Creek, which then flows into Chatfield Reservoir, a Traditional Navigable Water (TNW). A copy of this JD is also available at http://www.spa.usace.army.mil/reg/JD. This approved JD is valid for 5 years unless new information warrants revision of the determination before the expiration date.

You may accept or appeal this approved JD or provide new information in accordance with the attached Notification of Administration Appeal Options and Process and Request for Appeal (NAAOP-RFA). If you elect to appeal this approved JD, you must complete Section II of the form and return it to the Army Engineer Division, South Pacific, CESPD-PDS-O, Attn: Tom Cavanaugh, Administrative Appeal Review Officer, P.O. Box 36023, 450 Golden Gate Avenue, San Francisco, CA 94102 within 60 days of the date of this notice. Failure to notify the Corps within 60 days of the date of this

notice means that you accept the approved JD in its entirety and waive all rights to appeal the approved JD.

If you have any questions, please contact me at (970) 243-1199 X 1013 or by email at Tyler.R.Adams@usace.army.mil. At your convenience, please complete a Customer Service Survey online at https://regulatory.ops.usace.army.mil/customer-service-survey/.

Sincerely,

Tyler R. Adams

Digitally signed by Tyler R. Adams
Date: 2022.03.22 15:26:46 -06'00'

Tyler R. Adams
Project Manager NW
Colorado Branch

Enclosures

V6_Soils & Geology Report.pdf Markup Summary

CDurham (2)

Subject: Text Box
Page Label: 9
Author: CDurham
Date: 10/14/2026 5:25:34 PM
Status:
Color:
Layer:
Space:

Add Note: Any semi-permanent flowing underdrain systems are subject to state well permitting.

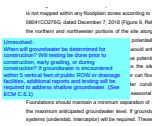

Subject: Text Box
Page Label: 11
Author: CDurham
Date: 10/14/2026 5:23:52 PM
Status:
Color:
Layer:
Space:

Unresolved:
When will groundwater be determined for construction? Will testing be done prior to construction, early grading, or during construction? If groundwater is encountered within 5 vertical feet of public ROW or drainage facilities, additional reports and testing will be required to address shallow groundwater. (See ECM C.6.1)