GENERAL NOTES:

1. COORDINATE INSTALLATION OF ALL ELECTRICAL EQUIPMENT AND DEVICES WITH ALL OTHER TRADES
2. ALL OUTDOOR INSTALLED EQUIPMENT, CABINETS AND DEVICES SHOULD HAVE AT LEAST NEMA 3R ENCLOSURE
3. SIZES OF CONDUCTORS BASED ON 75°F RATED TERMINALS. IF TERMINALS ARE RATED DIFFERENTLY, SEE NEC110.14(C)(1)
4. ALL OUTDOOR UNDERGROUND SECONDARY CONDUITS SHOULD BE PVC SCHEDULE 40 AND MIN. 24" BELOW GRADE
5. ELECTRICAL CONTRACTOR IS RESPONSIBLE:
   - TO PROVIDE ALL REQUIRED MATERIALS AND SCOPE OF WORK IN ACCORDANCE WITHY LUC CURRENT STANDARDS
   - SUBMIT LOAD DATA FORM AND ALL NECESSARY FINAL DRAWINGS TO LUC ENGINEER
   - COORDINATE INSTALLATION & LOCATION OF TRANSFORMER AND OTHER WITH LUC REPRESENTATIVE & ARCHITECT PLANS
   - PROVIDE CLEARANCES ACCORDING TO LUC STANDARDS
   - SCHEDULE REGIONAL BUILDING & UTILITY CO. INSPECTIONS.
   - VERIFY SEQUENCE OF PHASES FOR EACH SERVICE OF BUILDING WITH LUC REPRESENTATIVE
6. DO NOT INSTALL OUTDOOR ELECTRICAL EQUIPMENT UNDER THE WATER FLOW GUTTER
7. PROVIDE BEDDING & COMPACTING FOR ALL DESIGNED CONDUITS OR CABLES
8. WIRE FILL CALCULATION IS BASED ON THWN/XHHW TYPE OF WIRES FOR PVC/EMT. IF OTHER TYPE WIRES OR CONDUITS ARE USED, MAKE NECESSARY CALCULATIONS AND CHANGES FOR INSTALLATION
9. VERIFY LOCATIONS OF CABLE AND TELEPHONE PEDESTALS WITH COMPANIES REPRESENTATIVES
10. REPORT ANY DISCREPANCIES ON THIS DRAWING DURING THE PRE-BID PROCESS AND INSTALLATION

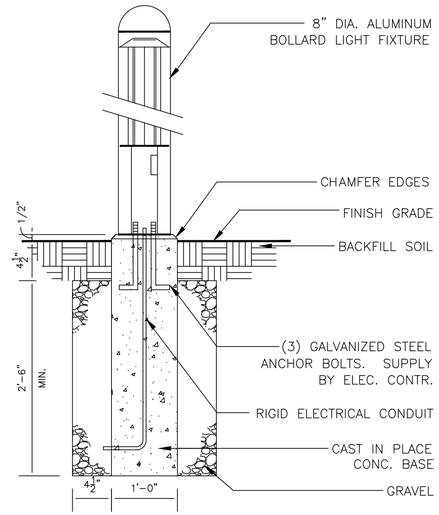

2 E-1 BOLLARD LIGHTS
NOT TO SCALE

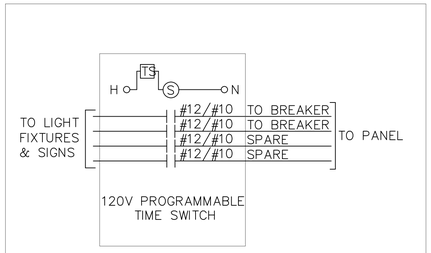

1 E-1 1 E-2 1 E-6 LIGHTING CONTROL
TYPICAL WIRING DIAGRAM

FEEDER SCHEDULE

KEY	DESCRIPTION
1	CU – 3#500 IN 3"C
2	CU – 3#1+#6G IN 2"C
3	CU – 2#10+#12G IN 1"C

FLAG NOTES:

1. RUN (2) MIN.2"C CONDUITS TO TELEPHONE/CATV CABINET IN BUILDING
2. CONNECT THROUGH TIME SWITCH WITH 2#10+1#12G IN 3/4"C
3. LOCATION OF NEW 400A SERVICE & (6)SOCKETS METER BANK
4. LOCATION OF POLE MOUNTED TRANSFORMER (XFMR) OF CSU. CONNECT TO XFMR AND COORDINATE WITH UTILITY COMPANY THE SCOPE OF REQUIRED WORK

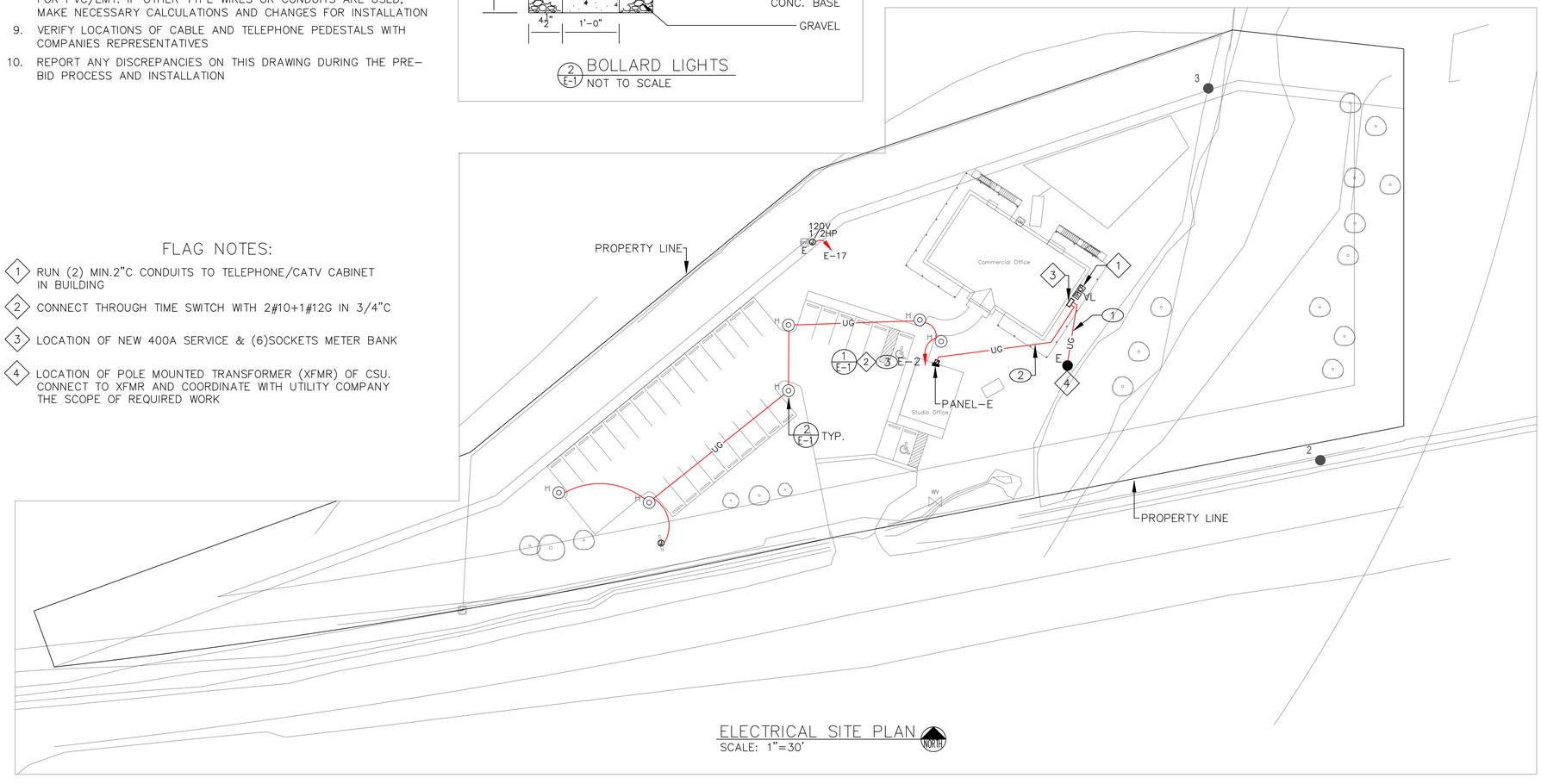

ELECTRICAL SITE PLAN
SCALE: 1"=30'

GSM Engineering
9990 Highland Glen Place,
Colorado Springs, CO 80920
Cell: (719) 238-0946
E-mail: gsm.engin@gmail.com

AFFINITY ENGINEERING, LLC
7887 EAST BELLEVIEW AVENUE
ENGLEWOOD, CO 80111
PHONE: 719-306-3411

JOHN HOTCHKISS
COMMERCIAL OFFICE
2290 OLD RANCH ROAD
COLORADO SPRINGS, CO

Project: 1905-05
Date: 5-26-2020
Design: GM
Drawn: GM
Check: GM
Revisions: