Vacuum stalls in water easement not resolved. All plans subject to change. Please contact CSU to resolve or remove stalls from water easement

QUICK QUACK

Constitution Colorado Springs, CO

VICINITY MAP

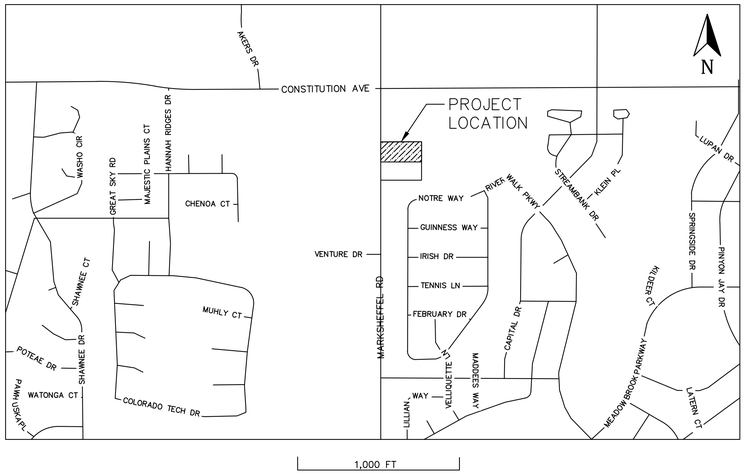

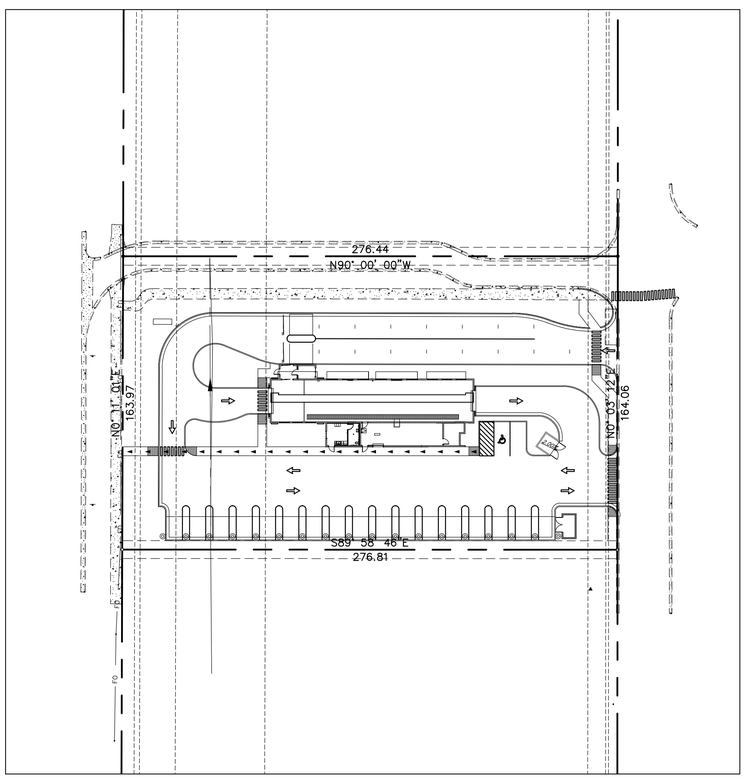

SITE MAP

1"=40'

INDEX

C-0 Cover Sheet
C-1 Site Development Plan
C-2 ADA Route Plan
C-3 Utility Plan
C-4 Details
C-5 Utility Details
LP101 Landscape Planting Plan
LD501 Planting Details
LS600 Landscape Specifications
Photometric Plan
A100 Dimension Floor Plan
A104 Canopy Elevations
A200 Exterior Elevations
A200 Exterior Color Elevations
Signage Plans

LEGEND & ABBREVIATION TABLE

R.O.W./PROPERTY LINE	
EASEMENT LINE	
CENTER LINE	
PROPOSED TRAIL	
PROPOSED WATER LINE	W
PROPOSED PRESSURIZED IRRIGATION	IRR
PROPOSED GROUND WATER DRAIN	GW
PROPOSED SEWER LINE	SS
PROPOSED STORM DRAIN LINE	SD
EXISTING SEWER LINE	SS
EXISTING WATER LINE	W
EXISTING STORM DRAIN LINE	SD
EXISTING CONTOUR	4247
FINISHED CONTOUR	47.00
EXISTING CURB AND GUTTER	
PROPOSED CURB AND GUTTER	
INVERT ELEVATION	I.E.
TOP BACK CURB	TBC
TOP ASPHALT	TA
TOP OF GRATE	TOG
FINISHED GRADE	FG
TOP OF CONCRETE	TC
HIGH WATER ELEVATION	HWE
CATCH BASIN	
SURFACE FLOW DIRECTION	
PROPOSED STREET LIGHT	
STORM DRAIN MANHOLE	D
SANITARY SEWER MANHOLE	S
PROPOSED WATER VALVE	W

PROJECT ENGINEER:
LARVIN POLLOCK
ELEVATE ENGINEERING
492 WEST 1200 NORTH
SPRINGVILLE, UT 84663
(801) 718-5993
LARVIN@ELEVATENG.COM

DEVELOPER:
JOSEPH EARNEST
LONESTAR BUILDERS
QQ UTAH COUNTY PO BOX 887
SPRINGVILLE, UT 84663
(801) 400-1944
JOSEPH@LONESTARBUILDERSINC.COM

SITE DATA

LOT AREA:	45,370	SF (1.04 ACRES)
BUILDING AREA:	3,980	SF± 8.8%
PAVEMENT AREA:	28,554	SF± 62.9%
LANDSCAPE AREA:	12,836	SF± 28.3%

ZONING: CR (COMMERCIAL REGIONAL)
PERMITTED USE

BUILDING DATA

CONSTRUCTION TYPE: V-B
OCCUPANCY TYPE: B
SPRINKLERS: NO
BUILDING HEIGHT: 29'6"
SETBACKS:
FRONT=50 FEET
REAR=0 FEET
SIDE=0 FEET

PARKING TABULATION

REQUIRED: 1 SPACE PER BAY OR STALL

PROVIDED: 2 STALLS
1 ADA STALL

TAX SCHEDULE NUMBER
5404210067

GENERAL NOTE:

"THE PARTIES RESPONSIBLE FOR THIS PLAN HAVE FAMILIARIZED THEMSELVES WITH ALL CURRENT ACCESSIBILITY CRITERIA AND SPECIFICATIONS AND THE PROPOSED PLAN REFLECTS ALL SITE ELEMENTS REQUIRED BY THE APPLICABLE ADA DESIGN STANDARDS AND GUIDELINES AS PUBLISHED BY THE UNITED STATES DEPARTMENT OF JUSTICE. APPROVAL OF THIS PLAN BY EL PASO COUNTY DOES NOT ASSURE COMPLIANCE WITH THE ADA OR ANY REGULATIONS OR GUIDELINES ENACTED OR PROMULGATED UNDER OR WITH RESPECT TO SUCH LAWS."

FILE # PPR-19-004

NO.	REVISIONS	BY	DATE

PROJECT ENGINEER: LP
DESIGNER: DL

ELEVATE ENGINEERING
492 WEST 1200 NORTH
SPRINGVILLE, UT 84663
PHONE: (801) 718-5993
larvin@elevateteng.com

QUICK QUACK CONSTITUTION
COVER SHEET
2437 MARKSHEFFEL ROAD COLORADO SPRINGS, CO 80951

COLORADO LICENSED
LARVIN POLLOCK
3/18/2019
0054520
PROFESSIONAL ENGINEER

SHEET:
C-0

DATE: Mar 18, 2019

STRUCTURE SETBACKS				
STRUCTURE	DISTANCE FROM NORTH PROPERTY LINE	DISTANCE FROM EAST PROPERTY LINE	DISTANCE FROM SOUTH PROPERTY LINE	DISTANCE FROM WEST PROPERTY LINE
QUICK QUACK BUIDLING	60.51 FEET	79.38 FEET	57.50 FEET	81.75 FEET
VACUUM CANOPY	145.51 FEET	35.16 FEET	5.48 FEET	24.63 FEET
DUMPSTER ENCLOSURE	98.06 FEET	32.41 FEET	52.40 FEET	230.92 FEET
VACUUM ENCLOSURE	143.92 FEET	23.12 FEET	6.13 FEET	245.69 FEET

PROJECT ENGINEER:
LARVIN POLLOCK
ELEVATE ENGINEERING
492 WEST 1200 NORTH
SPRINGVILLE, UT 84663
(801) 718-5993
LARVIN@ELEVATENG.COM

DEVELOPER:
JOSEPH EARNEST
LONESTAR BUILDERS
QQ UTAH COUNTY PO BOX 887
SPRINGVILLE, UT 84663
(801) 400-1944
JOSEPH@LONESTARBUILDERSINC.COM

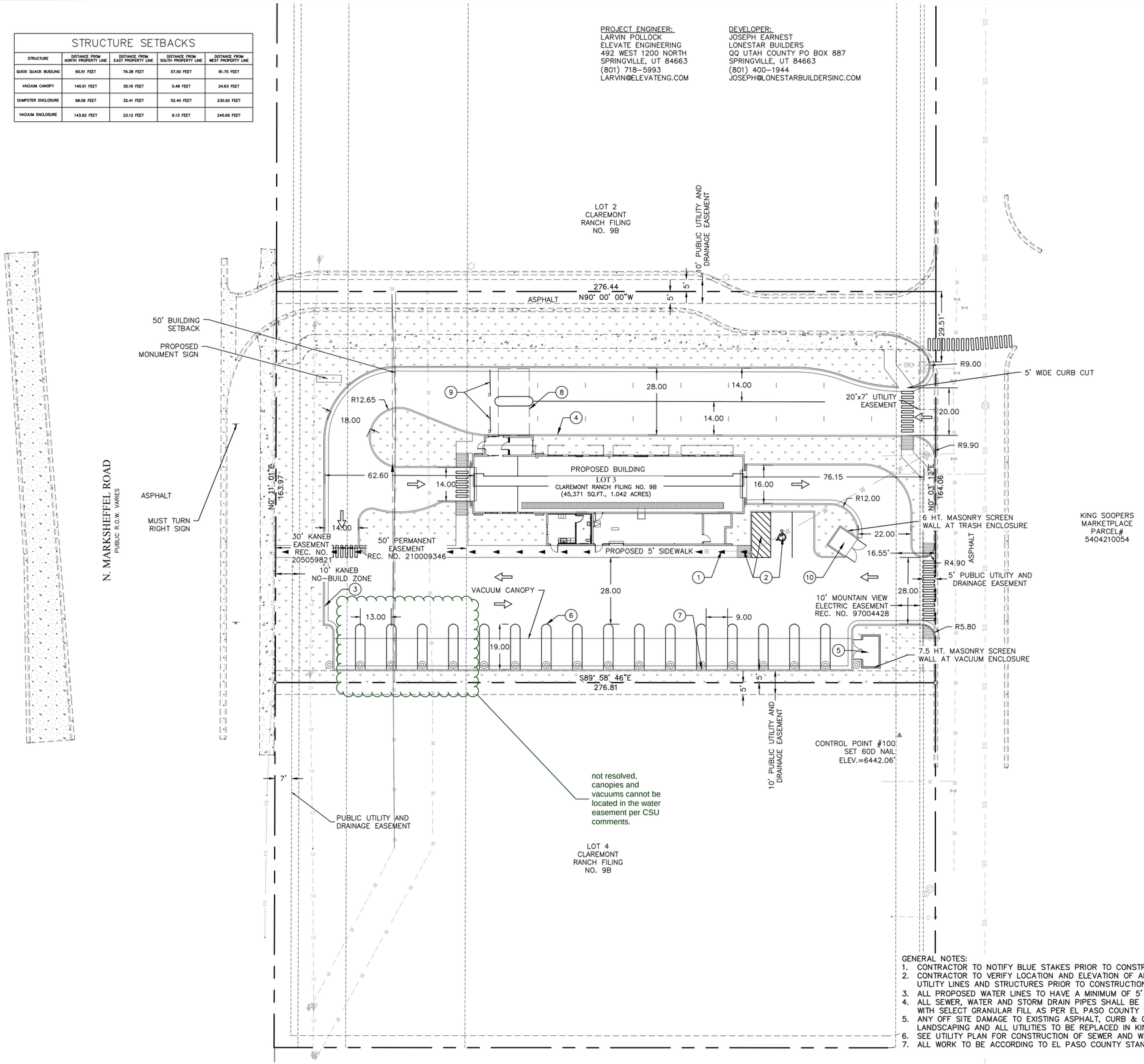

ALL SITE PAVEMENT TO BE CONCRETE.

GENERAL NOTES:
1. CONTRACTOR TO NOTIFY BLUE STAKES PRIOR TO CONSTRUCTION
2. CONTRACTOR TO VERIFY LOCATION AND ELEVATION OF ALL EXISTING UTILITY LINES AND STRUCTURES PRIOR TO CONSTRUCTION
3. ALL PROPOSED WATER LINES TO HAVE A MINIMUM OF 5' OF COVER
4. ALL SEWER, WATER AND STORM DRAIN PIPES SHALL BE BACKFILLED WITH SELECT GRANULAR FILL AS PER EL PASO COUNTY STANDARDS.
5. ANY OFF SITE DAMAGE TO EXISTING ASPHALT, CURB & GUTTER, LANDSCAPING AND ALL UTILITIES TO BE REPLACED IN KIND.
6. SEE UTILITY PLAN FOR CONSTRUCTION OF SEWER AND WATER LINES.
7. ALL WORK TO BE ACCORDING TO EL PASO COUNTY STANDARDS.

FILE # PPR-19-004

LEGEND

LOT LINES (PROPERTY)	
EXISTING CURB AND GUTTER	
PROPOSED CURB AND GUTTER	
STRIPING	
BUILDING SETBACK	
LANDSCAPE SETBACK	
EXISTING BUILDING	
EXISTING FENCE	x
EASEMENT	
TOP BACK OF CURB	TBC
FINISHED FLOOR ELEVATION	FFE
LANDSCAPE AREA	
CONCRETE AREA	

SITE DATA

LOT AREA:	45,370	SF (1.04 ACRES)
BUILDING AREA:	3,980	SF± 8.8%
PAVEMENT AREA:	28,819	SF± 63.5%
LANDSCAPE AREA:	12,571	SF± 27.7%

ZONING: CR (COMMERCIAL REGIONAL)
PERMITTED USE

BUILDING DATA

CONSTRUCTION TYPE: V-B
OCCUPANCY TYPE: B
SPRINKLERS: NO
BUILDING HEIGHT: 29'6"
SETBACKS:
FRONT=50 FEET
REAR=0 FEET
SIDE=0 FEET

PARKING TABULATION

REQUIRED: 1 SPACE PER BAY OR STALL

PROVIDED: 2 STALLS
1 ADA STALL

VACUUM STALLS: 17 STALLS
TUNNEL LENGTH: 114 FEET
STACKING: 16 STALLS

NOTES:

1. PROPOSED 5' SIDEWALK PER CITY OF COLORADO SPRINGS STD D-8L. SEE SHEET C-4 FOR DETAILS.
2. ALL HANDICAP STALLS AND RAMPS TO BE INSTALLED PER ADA AND APWA STANDARDS. SEE SHEET C-4 FOR DETAILS.
3. PROPOSED CURB & GUTTER TYPE E PER EL PASO COUNTY STD SD-2-20. SEE SHEET C-4 FOR DETAILS.
4. PROPOSED CURB TYPE 3 PER CITY OF COLORADO SPRINGS STD D-6. SEE SHEET C-4 FOR DETAILS.
5. CONSTRUCT VACUUM ENCLOSURE WITH CONCRETE PAD AND APRON. INSTALL OWNER PROVIDED VACUUM EQUIPMENT, UNDERGROUND TRUNK LINES, PIPING, ETC. COORDINATE WITH ARCHITECTURAL PLANS.
6. PAINT 4" SOLID YELLOW PAINT STRIPE AS SHOWN (TYPICAL).
7. INSTALL OWNER PROVIDED "TOMMY BALL" PLANTERS/GARBAGE RECEPTACLE (TYPICAL). COORDINATE WITH ARCHITECTURAL PLANS FOR DETAILS.
8. INSTALL OWNER PROVIDED PAY STATIONS WITH CANOPY. COORDINATE WITH ARCHITECTURAL PLANS FOR DETAILS.
9. INSTALL OWNER PROVIDED GATES AND LOOP DETECTION SYSTEM. COORDINATE TIMING OF INSTALLATION PRIOR TO CONSTRUCTION OF PAVEMENT. SEE ARCHITECTURAL PLANS FOR DETAILS.
10. PROPOSED DUMPSTER LOCATION. SEE SHEET C-4 FOR DETAILS.

811 Know what's below. Call before you dig.

N

0 20 40 60
Scale in Feet

NO.	REVISIONS	BY	DATE

PROJECT ENGINEER: LP
DESIGNER: DL

ELEVATE ENGINEERING
492 WEST 1200 NORTH
SPRINGVILLE, UT 84663
PHONE: (801) 718-5993
larvin@elevateteng.com

ELEVATE ENGINEERING

QUICK QUACK CONSTITUTION SITE PLAN

2437 MARKSHEFFEL ROAD COLORADO SPRINGS, CO 80951

COLORADO LICENSED LARVIN POLLOCK 3/12/2019 0054520 PROFESSIONAL ENGINEER

SHEET:
C-1

DATE: Mar 12, 2019

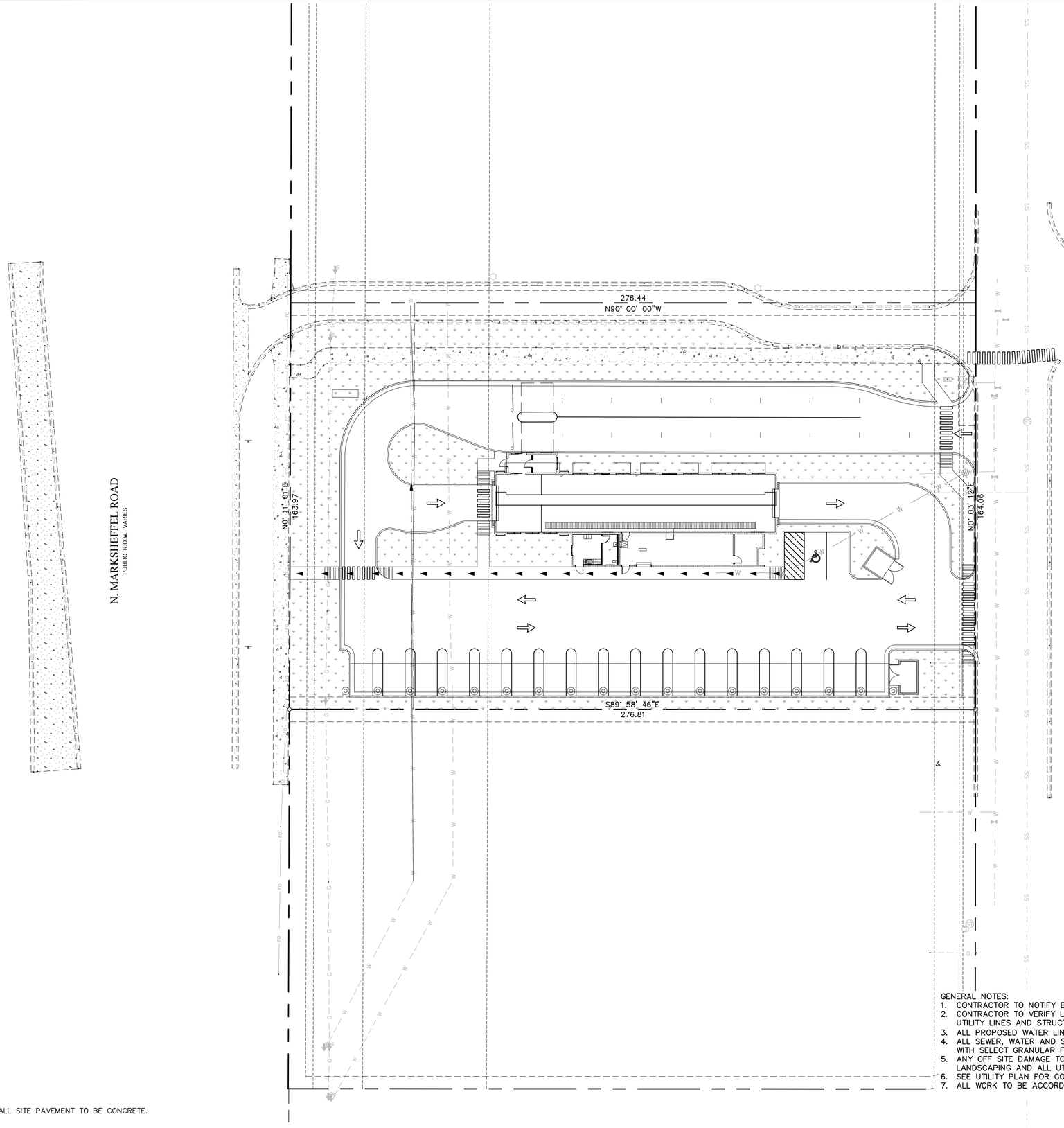

LEGEND

LOT LINES (PROPERTY)	
EXISTING CURB AND GUTTER	
PROPOSED CURB AND GUTTER	
STRIPING	
BUILDING SETBACK	
LANDSCAPE SETBACK	
EXISTING BUILDING	
EXISTING FENCE	x
EASEMENT	
TOP BACK OF CURB	TBC
FINISHED FLOOR ELEVATION	FFE
LANDSCAPE AREA	
CONCRETE AREA	
ACCESSIBLE ROUTE	

GENERAL NOTES:
1. CONTRACTOR TO NOTIFY BLUE STAKES PRIOR TO CONSTRUCTION
2. CONTRACTOR TO VERIFY LOCATION AND ELEVATION OF ALL EXISTING UTILITY LINES AND STRUCTURES PRIOR TO CONSTRUCTION
3. ALL PROPOSED WATER LINES TO HAVE A MINIMUM OF 5' OF COVER
4. ALL SEWER, WATER AND STORM DRAIN PIPES SHALL BE BACKFILLED WITH SELECT GRANULAR FILL AS PER EL PASO COUNTY STANDARDS.
5. ANY OFF SITE DAMAGE TO EXISTING ASPHALT, CURB & GUTTER, LANDSCAPING AND ALL UTILITIES TO BE REPLACED IN KIND.
6. SEE UTILITY PLAN FOR CONSTRUCTION OF SEWER AND WATER LINES.
7. ALL WORK TO BE ACCORDING TO EL PASO COUNTY STANDARDS.

ALL SITE PAVEMENT TO BE CONCRETE.

FILE # PPR-19-004

Know what's below. Call before you dig.

N

0 20 40 60
Scale in Feet

NO.	REVISIONS	BY	DATE

PROJECT ENGINEER: LP
DESIGNER: DL

ELEVATE ENGINEERING
492 WEST 1200 NORTH
SPRINGVILLE, UT 84663
PHONE: (801) 718-5993
larvie@elevateeng.com

ELEVATE ENGINEERING

QUICK QUACK CONSTITUTION
ADA ROUTE PLAN
2437 MARKSHEFFEL ROAD COLORADO SPRINGS, CO 80951

COLORADO LICENSED
LARVIN POLLARD
3/12/2019
0054520
PROFESSIONAL ENGINEER

SHEET:
C-2

DATE: Mar 12, 2019

\\Mac\Home\Elevate Engineering Dropbox\QQ CO Colorado Springs Constitution\QQ CO CONSTITUTION 1H.dwg – – Mar 12, 2019–2:29pm

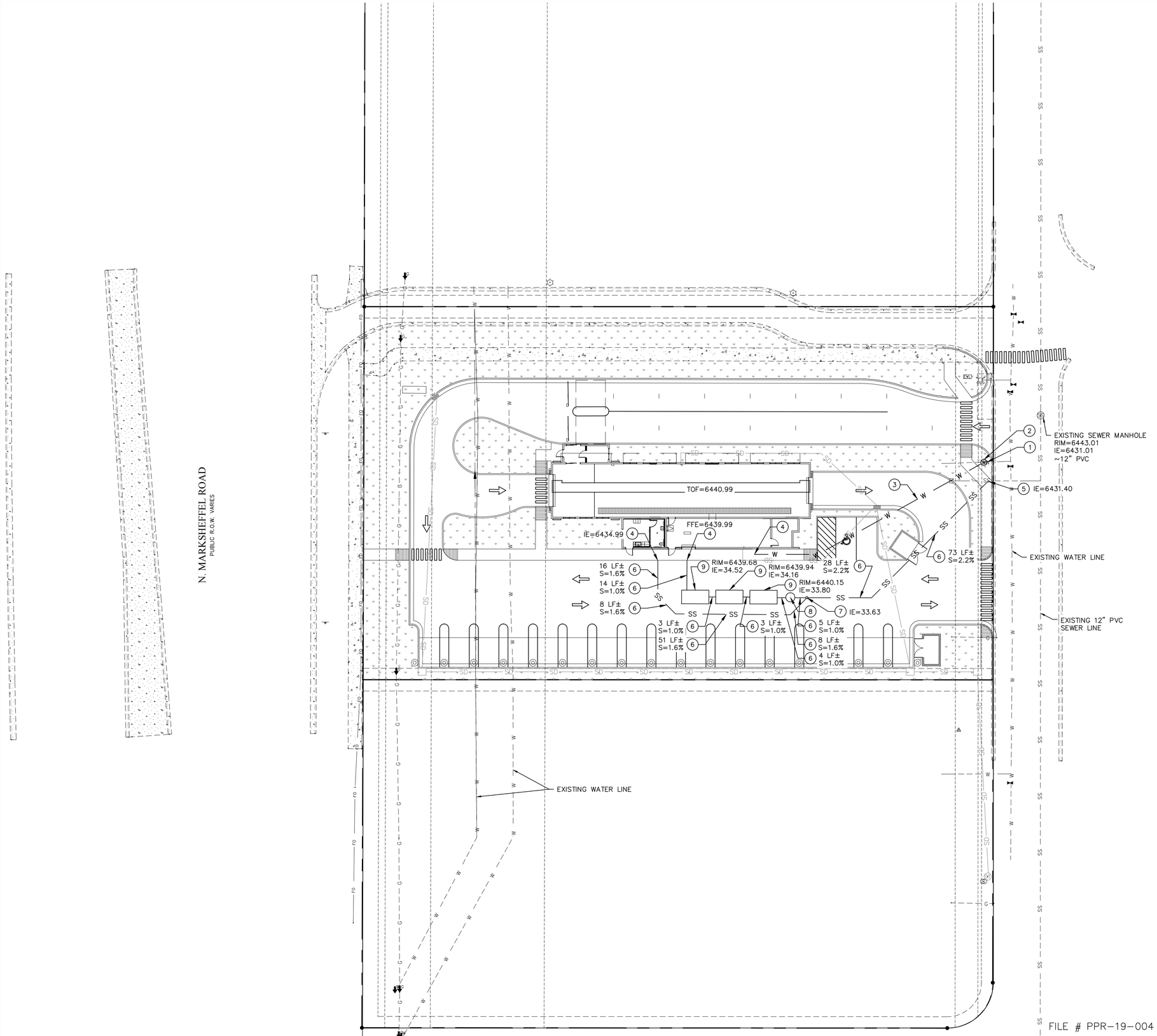

LEGEND

PROPERTY/ROW LINE	
EXISTING CURB AND GUTTER	
PROPOSED CURB AND GUTTER	
PROPOSED STORM DRAIN LINE	SD
EXISTING STORM DRAIN LINE	SD
PROPOSED SEWER LINE	SS
EXISTING SEWER LINE	SS
PROPOSED WATER LINE	W
EXISTING WATER LINE	W
EASEMENT	
INVERT ELEVATION	IE
EXISTING	EX
FINISHED GRADE	FG
FINISHED FLOOR ELEVATION	FFE

DESIGN NOTES:

1. CONNECT TO EXISTING WATER STUB.
2. INSTALL 2" WATER METER PER CITY STANDARD DRAWING. SEE SHEET C-5 FOR DETAILS.
3. INSTALL 2" POLY WATER LINE PER CITY STANDARDS.
4. END ALL UTILITIES 5' FROM BUILDING, SEE PLUMBING PLANS FOR CONTINUATION.
5. CONNECT TO EXISTING SEWER STUB PER CITY STANDARDS. SEE SHEET C-5 FOR DETAILS. CONTRACTOR TO VERIFY LOCATION AND ELEVATION PRIOR TO ANY CONSTRUCTION.
6. INSTALL 6"ø PVC SDR-35 SEWER PIPE AT 1% MIN. SLOPE.
7. INSTALL 6" CLEANOUT.
8. INSTALL 48" SANITARY SEWER SAMPLING MANHOLE PER APWA PLAN 411. SEE SHEET C-5 FOR DETAILS. RIM=6440.30 IE=6433.76 OUT=6433.68
9. INSTALL 1500 GAL. GREASE INTERCEPTOR/RECLAIM TANKS. INSTALL 3' OF 6"ø PVC SDR-35 SEWER PIPE AT 1% MIN. SLOPE BETWEEN TANKS. COORDINATE WITH PLUMBING PLANS FOR DETAILS.

GENERAL NOTES:

1. CONTRACTOR TO NOTIFY BLUE STAKES PRIOR TO CONSTRUCTION
2. CONTRACTOR TO VERIFY LOCATION AND ELEVATION OF ALL EXISTING UTILITY LINES AND STRUCTURES PRIOR TO CONSTRUCTION
3. ALL PROPOSED WATER LINES TO HAVE A MINIMUM OF 5' OF COVER
4. ALL SEWER, WATER AND STORM DRAIN PIPES SHALL BE BACKFILLED WITH SELECT GRANULAR FILL AS PER CITY STANDARDS.
5. ANY OFF SITE DAMAGE TO EXISTING ASPHALT, CURB & GUTTER, LANDSCAPING AND ALL UTILITIES TO BE REPLACED IN KIND.
6. SEE GRADING AND DRAINAGE PLAN FOR CONSTRUCTION OF SEWER AND WATER LINES.
7. ALL WORK TO BE ACCORDING TO CITY STANDARDS.

PRIVATE UTILITIES
CONTRACTOR TO CONTACT THE FOLLOWING COMPANIES PRIOR TO ANY CONSTRUCTION. EXACT LOCATION OF THESE UTILITIES TO BE DESIGNED AND COORDINATED BY THE FOLLOWING COMPANIES.

DOMINION ENERGY – 801-853-6597
ROCKY MOUNTAIN POWER – 801-756-1310
CENTURY LINK – 801-536-6975

811 Know what's below. Call before you dig.

N

0 20 40 60
Scale in Feet

NO.	REVISIONS	BY	DATE

PROJECT ENGINEER: LP
DESIGNER: DL

ELEVATE ENGINEERING
492 WEST 1200 NORTH
SPRINGVILLE, UT 84663
PHONE: (801) 718-5993
larvin@elevateeng.com

ELEVATE ENGINEERING

QUICK QUACK CONSTITUTION UTILITY PLAN

2437 MARKSHEFFEL ROAD COLORADO SPRINGS, CO 80951

COLORADO LICENSED
LARVIN FULLER
12/20/2019
0054520
PROFESSIONAL ENGINEER

SHEET: C-3

DATE: Mar 12, 2019

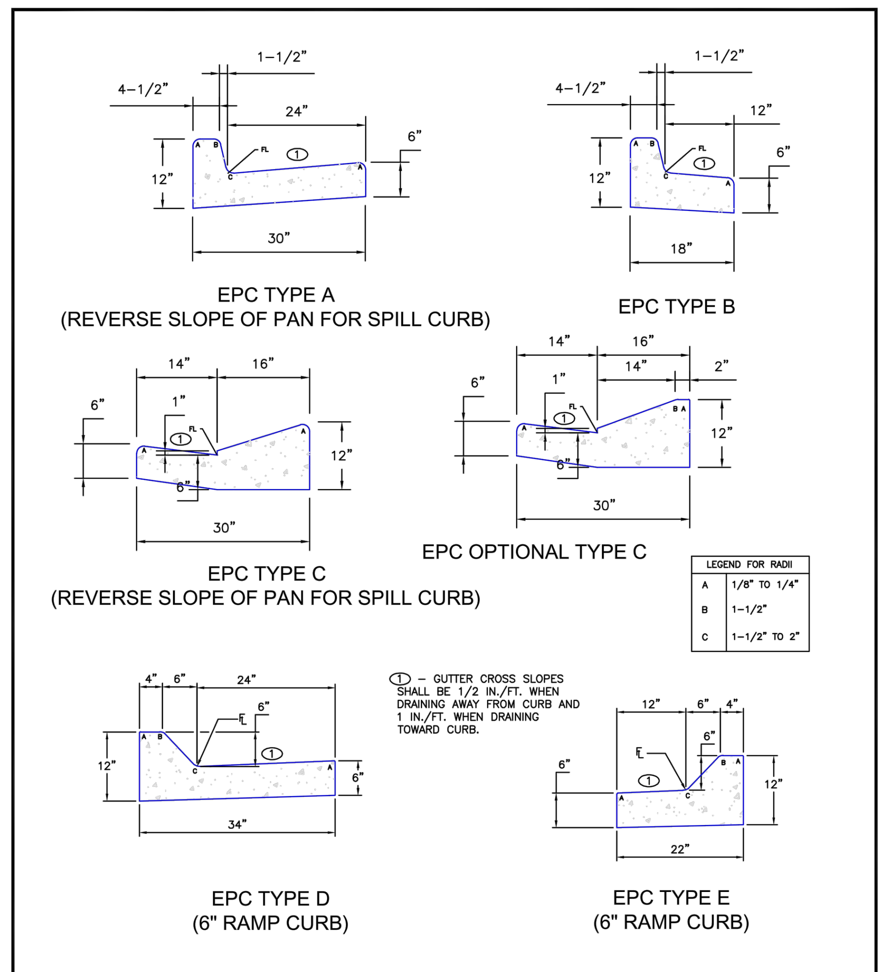

LEGEND FOR RADII	
A	1/8" TO 1/4"
B	1-1/2"
C	1-1/2" TO 2"

(1) – GUTTER CROSS SLOPES SHALL BE 1/2 IN./FT. WHEN DRAINING AWAY FROM CURB AND 1 IN./FT. WHEN DRAINING TOWARD CURB.

SCALE: NOT TO SCALE

8/11/11 DATE APPROVED: André P. Brackin DEPARTMENT OF TRANSPORTATION	Typical Curb and Gutter Details Standard Drawing	
	REVISION DATE: 12/8/15	FILE NAME: SD_2-20

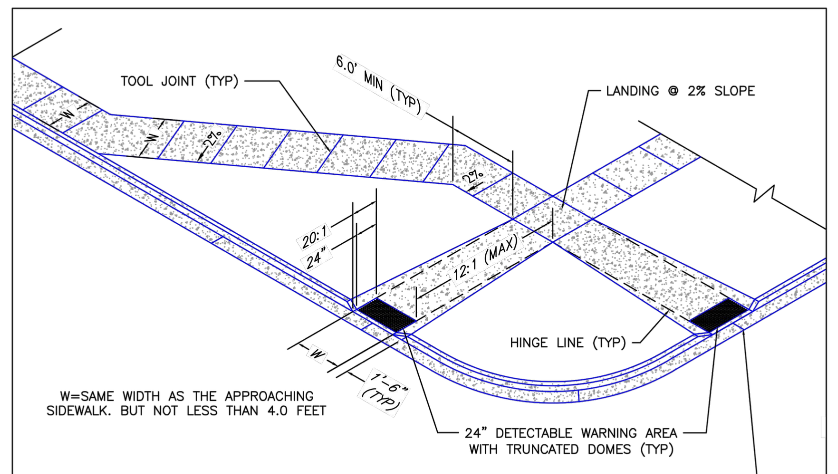

PEDESTRIAN RAMP NOTES

1. ALL WORK SHALL BE DONE IN ACCORDANCE WITH THE CURRENT ENGINEERING CRITERIA MANUAL AND ADA REQUIREMENTS.
2. CONTRACTOR TO NOTIFY ENGINEERING DIVISION INSPECTION STAFF 48 HOURS PRIOR TO CONCRETE PLACEMENT.
3. PEDESTRIAN RAMP CONSTRUCTION SHALL BE A MINIMUM 4,500 PSI CONCRETE, MINIMUM 4" THICK, NON-COLORED, NON-SCORED, COARSE BROOM FINISH.
4. RAMP LOCATION AND LENGTH MAY REQUIRE MODIFICATION TO MAINTAIN THE 12:1 MAXIMUM RUNNING RAMP SLOPE AND 20:1 DETECTABLE WARNING AREA DUE TO STREET INTERSECTION GRADES AND/OR ALIGNMENTS.
5. DETECTABLE WARNING AREA SHALL START A MINIMUM OF 6" BUT NOT MORE THAN 8" FROM THE FLOWLINE OF THE CURB AT ANY POINT.
6. DETECTABLE WARNING AREA SHALL BE PREFABRICATED, REDDISH INTEGRALLY COLORED, TRUNCATED-DOME, PAVERS. THERMOPLASTIC TRUNCATED DOMES WILL NOT BE ACCEPTED.
7. THE DETECTABLE WARNING AREA SHALL BE 24" IN LENGTH AND THE FULL WIDTH OF THE RAMP.
8. RAMP WIDTH REQUIRED IS SAME AS APPROACHING SIDEWALK; 4' MINIMUM.
9. ALL RAMPS WILL BE PERPENDICULAR TO TRAFFIC WITH THE EXCEPTION OF MID-BLOCK OR TERMINAL RAMPS WHICH MAY BE PARALLEL SUBJECT TO APPROVAL.
10. AVOID PLACING DRAINAGE STRUCTURES, TRAFFIC SIGNAL/SIGNAGE, UTILITIES/JUNCTION BOXES, OR OTHER OBSTRUCTIONS WITHIN PROPOSED RAMP AREAS.

GENERAL NOTES

1. WHERE THE 1'-6" FLARED SIDE(S) OF A PERPENDICULAR CURB RAMP IS (ARE) CONTIGUOUS WITH A PEDESTRIAN OR HARD SURFACE AREA, THE MAXIMUM FLARE SLOPE SHALL NOT EXCEED 10:1.
2. PEDESTRIAN WALKWAY AND/OR LOCATION OF EXISTING OR FUTURE PEDESTRIAN RAMPS ON OPPOSITE CORNERS SHALL BE REVIEWED BEFORE CONSTRUCTING NEW RAMPS.
3. AT MARKED PEDESTRIAN CROSSINGS, THE BOTTOM OF THE RAMPS, EXCLUSIVE OF THE FLARE SIDES, SHALL BE TOTALLY CONTAINED WITHIN THE MARKINGS.

7/9/09 DATE APPROVED: André P. Brackin DEPARTMENT OF TRANSPORTATION	Pedestrian Intersection Ramp Standard Drawing	
	REVISION DATE: 12/8/15	FILE NAME: SD_2-41

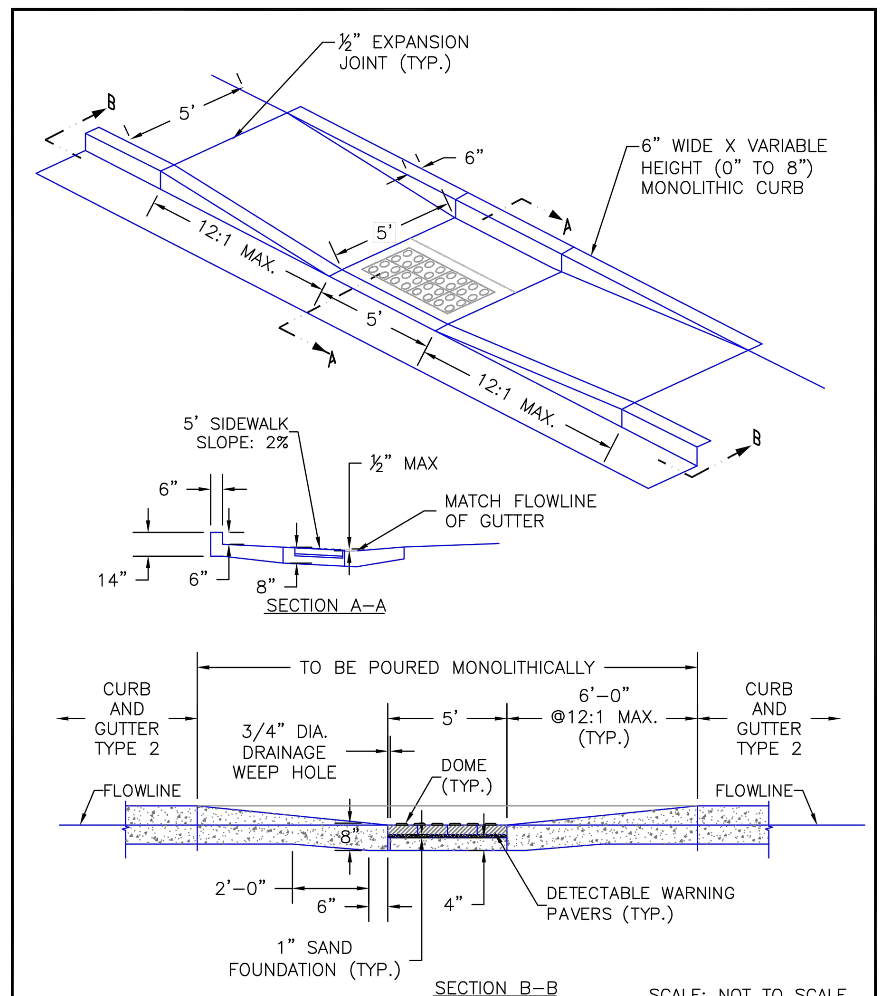

SCALE: NOT TO SCALE

8/11/11 DATE APPROVED: André P. Brackin DEPARTMENT OF TRANSPORTATION	Parallel Pedestrian Ramp Detail Standard Drawing	
	REVISION DATE: 12/8/15	FILE NAME: SD_2-50

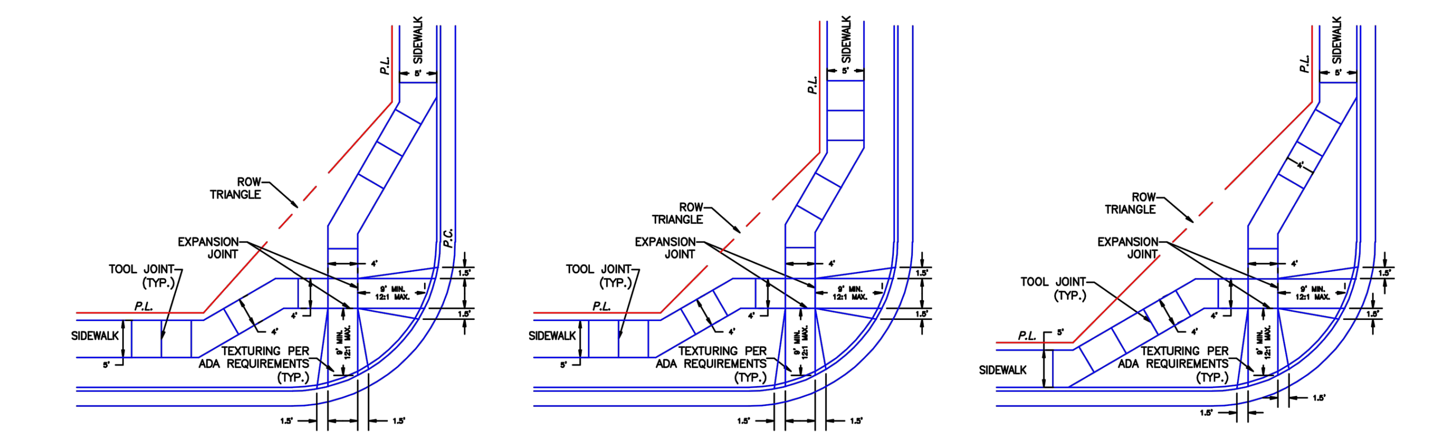

SCALE: NOT TO SCALE

9/16/10 DATE APPROVED: André P. Brackin DEPARTMENT OF TRANSPORTATION	Pedestrian Intersection Ramp Detail Standard Drawing	
	REVISION DATE: 11/10/04	FILE NAME: SD_2-40

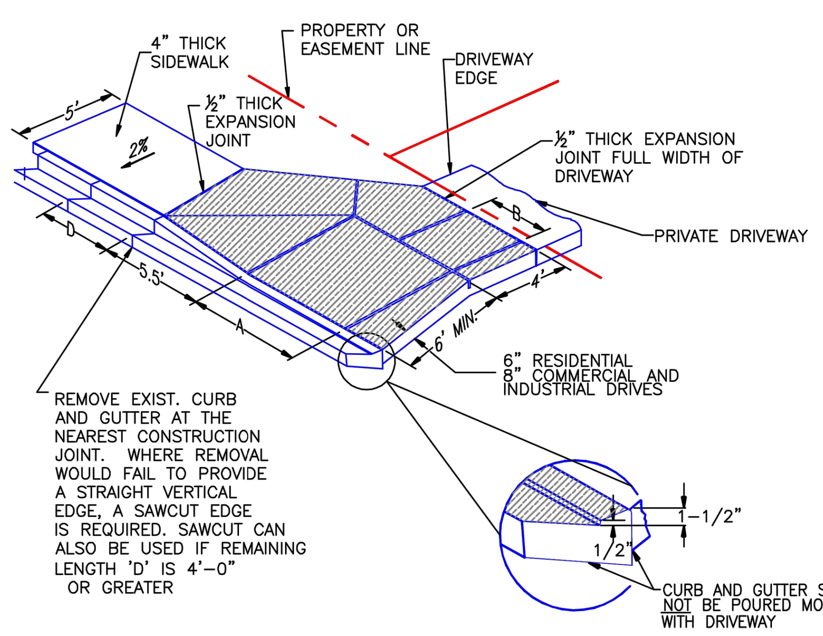

NOTES

1. PROVIDE CENTERLINE CONSTRUCTION OR TOOL JOINT WHEN DRIVEWAY WIDTH (EDGE TO EDGE) IS 14' OR GREATER.
2. ALL TOOL JOINTS SHALL BE A MINIMUM OF 1-½" DEEP.
3. WHEN REPLACING EXISTING CURB AND GUTTER WITH NEW DRIVEWAY, ENTIRE CURB AND GUTTER SECTION SHALL BE REMOVED AND REPLACED WITH CURB AND GUTTER (VARIABLE-CURB-HEIGHT) AS SHOWN. DO NOT BREAK CURB FROM GUTTER SECTION.
4. FLARED PORTION OF DRIVEWAY SHALL BE POURED MONOLITHIC WITH MAIN RECTANGULAR PORTION OF DRIVEWAY.
5. WHERE THERE IS MORE THAN ONE DRIVEWAY ON A LOT, THE SPACING OF THE DRIVEWAYS SHALL MEET REQUIREMENTS IN ECM.
6. WHERE AN EXISTING SIDEWALK IS IN PLACE, AND ITS THICKNESS IS LESS THAN 6" (RESIDENTIAL) OR 8" (COMMERCIAL AND INDUSTRIAL) THE SIDEWALK THROUGH THE DRIVEWAY SHALL BE REMOVED AND REPLACED WITH PORTLAND CEMENT CONCRETE AT THE REQUIRED THICKNESS.
7. WHEN A DRIVEWAY IS TO BE TAKEN OUT OF SERVICE, THE ENTIRE LENGTH OF CURB AND GUTTER SHALL BE REMOVED AND REPLACED WITH NEW CURB AND GUTTER MATCHING THE ABUTTING SECTIONS.
8. ALL PROVISIONS IN THE LAND DEVELOPMENT CODE SHALL BE MET, WITH REGARD TO MINIMUM SETBACK FROM INTERSECTION AND SIDE PROPERTY LINES, MINIMUM SPACING, MAXIMUM WIDTH, ETC.

TOOLS JOINT SPACING

DRIVEWAY WIDTH	A	B
12'	6'	3'
14'	7'	3'-6"
16'	8'	4'
18'	9'	4'-6"
20'	10'	5'
22'	11'	5'-6"
24'	8'	4'
26'	8'-8"	4'-4"
28'	9'-4"	4'-8"
30'	10'	5'

SCALE: NOT TO SCALE

8/11/11 DATE APPROVED: André P. Brackin DEPARTMENT OF TRANSPORTATION	Driveway Detail With Attached Sidewalk Standard Drawing	
	REVISION DATE: 11/10/04	FILE NAME: SD_2-24

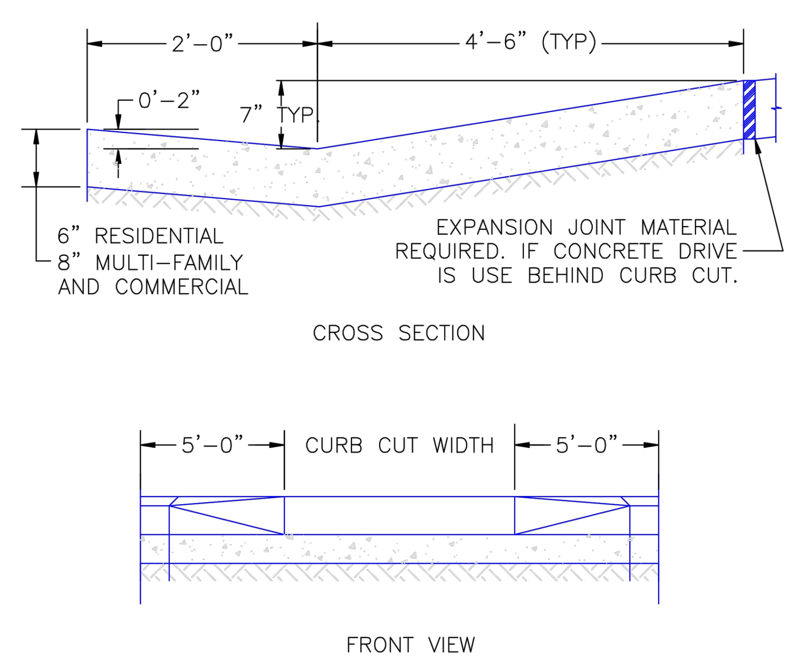

SCALE: NOT TO SCALE

8/11/11 DATE APPROVED: André P. Brackin DEPARTMENT OF TRANSPORTATION	Driveway Cut Detail Standard Drawing	
	REVISION DATE: 11/10/04	FILE NAME: SD_2-23

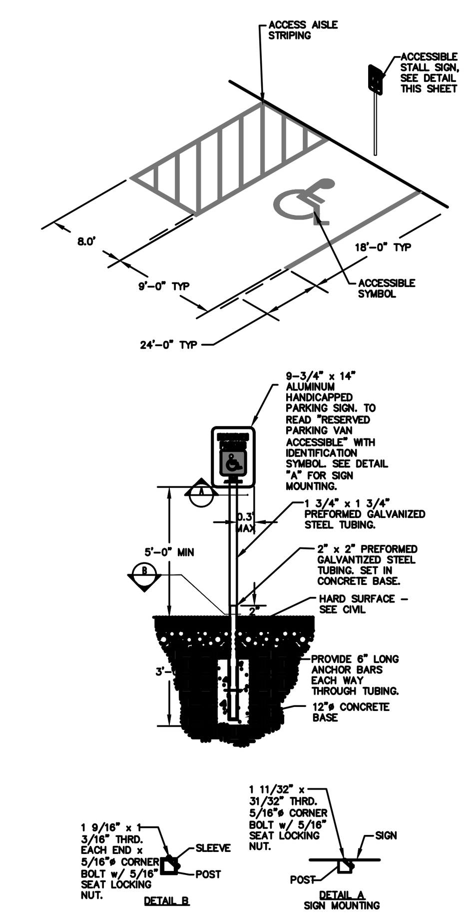

6 ADA SIGNAGE

SCALE: N.T.S.

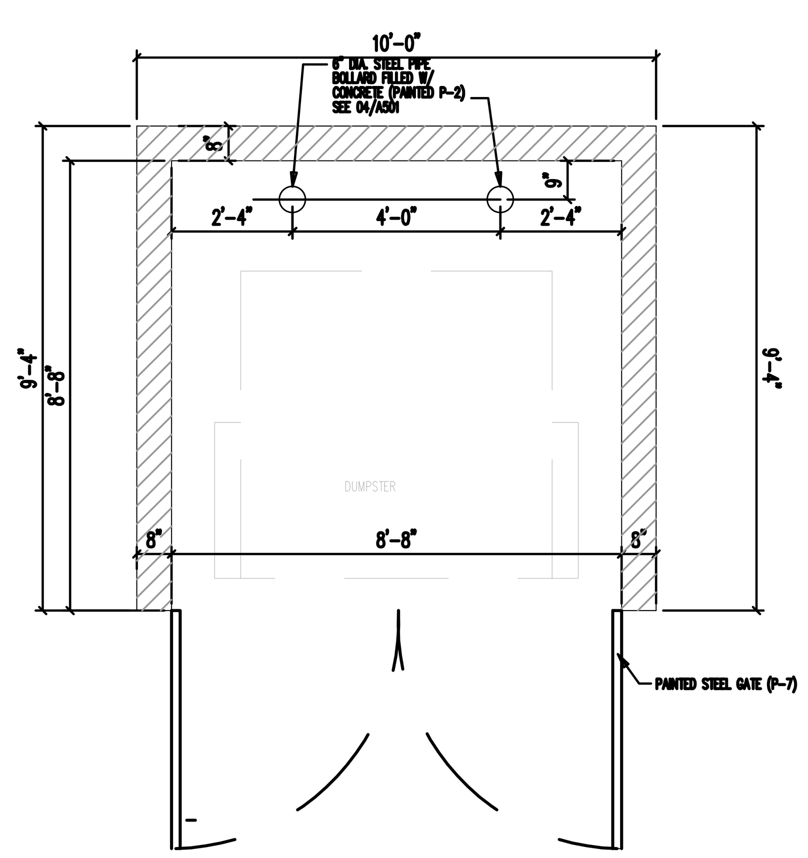

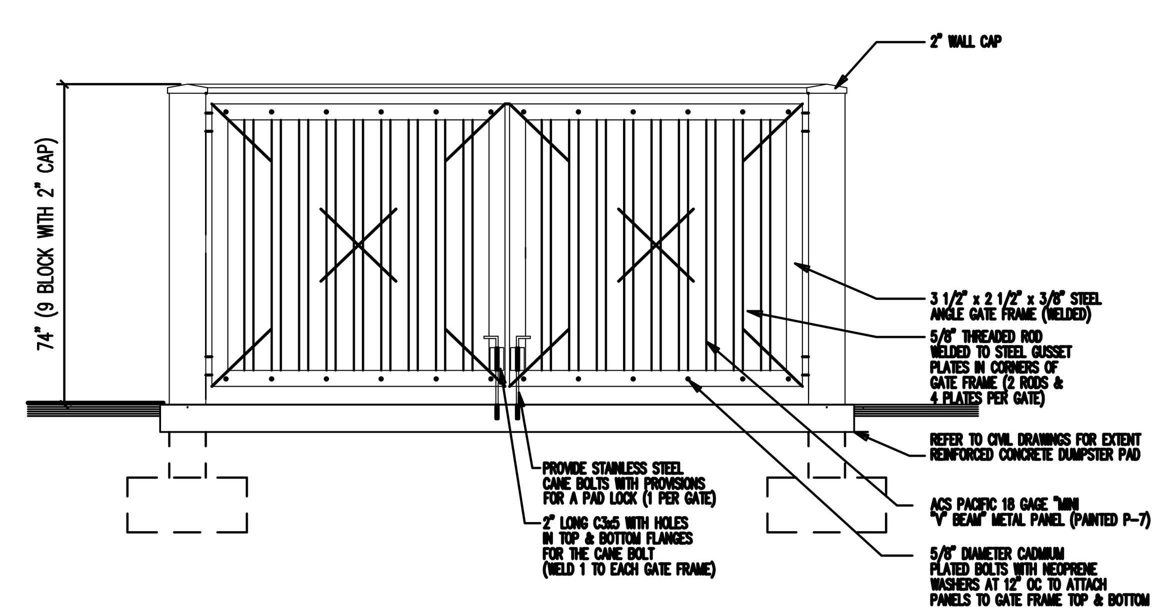

NOT TO SCALE

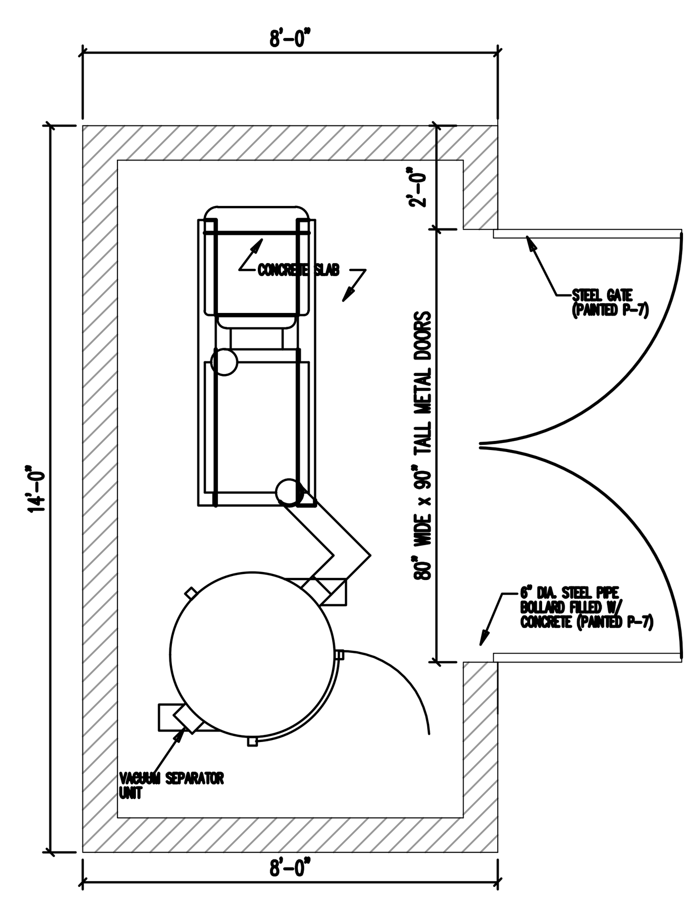

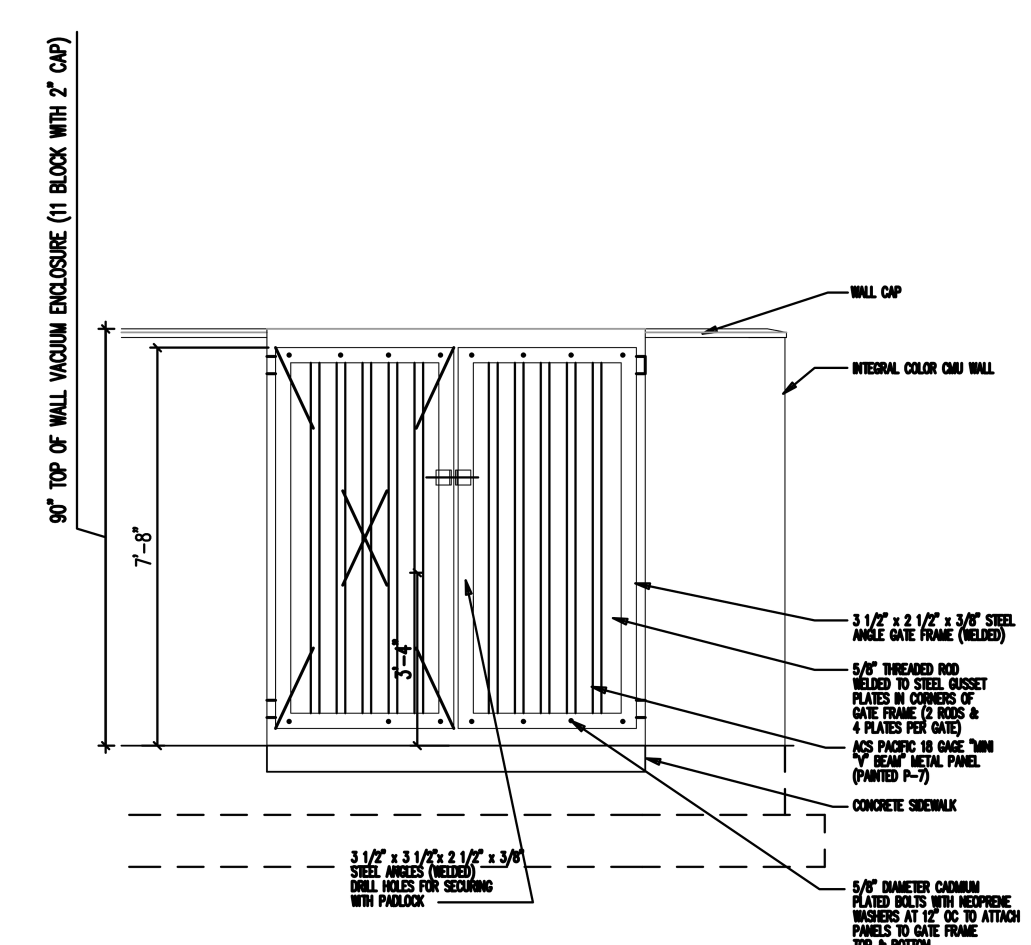

NO.	REVISIONS	BY	DATE

PROJECT ENGINEER: LP DESIGNER: DL

ELEVATE ENGINEERING
492 WEST 1200 NORTH
SPRINGVILLE, UT 84663
PHONE: (801) 718-5993
larvin@elevateng.com

ELEVATE ENGINEERING

QUICK QUACK CONSTITUTION STANDARD DETAILS

2437 MARKSHEFFEL ROAD COLORADO SPRINGS, CO 80951

COLORADO LICENSED PROFESSIONAL ENGINEER — LARVIN POLLOCK — 3/19/2019 — 0054520

SHEET: C-4

DATE: Mar 19, 2019

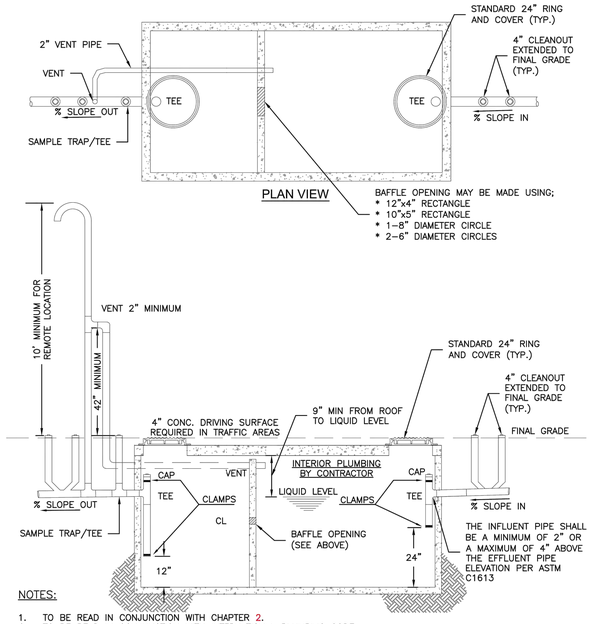

NOTES:

1. TO BE READ IN CONJUNCTION WITH CHAPTER 2.
2. TO BE READ IN CONJUNCTION WITH INTERNATIONAL PLUMBING CODE.
3. WHENEVER PRACTICAL, THE TWO VENTS SHALL BE RUN UNDERGROUND TO THE BUILDING AND UP THROUGH THE ROOF. VENTS SHALL BE LOCATED AWAY FROM BUILDING AIR INTAKES.
4. INTERIOR PIPING TO BE STRAPPED AT TOP AND BOTTOM WITH GALVANIZED CLAMPS OR EQUAL.
5. SIZE OF GREASE INTERCEPTOR TO BE DETERMINED BY DESIGN ENGINEER AND APPROVED BY COLORADO SPRINGS UTILITIES.
6. UNLESS SPECIFICALLY NOTED HERE, GREASE INTERCEPTORS SHALL CONFORM TO ASTM C1613.
7. RING AND COVER SHALL BE PROVIDED EVERY 10' FOR GREASE INTERCEPTORS LONGER THAN 20'.

Colorado Springs Utilities
It's how we're all connected

TYPICAL GREASE INTERCEPTOR

C4-2

DATED 5/2015

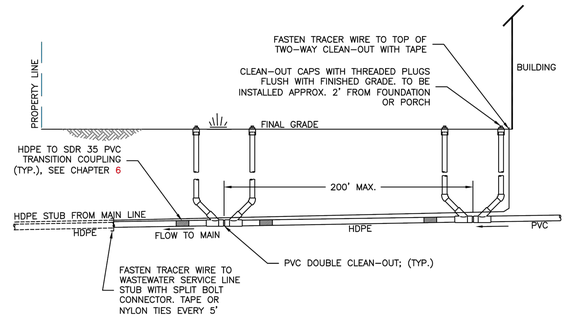

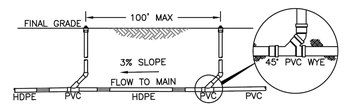

SINGLE CLEAN-OUT INSTALLATION

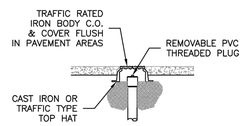

CLEAN-OUT INSTALLATION IN PAVEMENT

NOTES:

1. SINGLE CLEAN-OUT TO BE PLACED AT 100' INTERVALS, TWO-WAY CLEAN-OUTS AT 200' INTERVALS (100' EACH WAY CLEANING).
2. TRACER WIRE TO BE CONTINUOUSLY CONNECTED FROM THE MAIN LINE TO THE CLEAN-OUT LOCATED AT THE BUILDING.
3. SEE CHAPTER 2 FOR MINIMUM SLOPES OF HDPE WASTEWATER SERVICE LINES.

Colorado Springs Utilities
It's how we're all connected

TYPICAL HDPE WASTEWATER SERVICE LINE CLEAN-OUT DETAIL

D1-10

DATED 5/2015

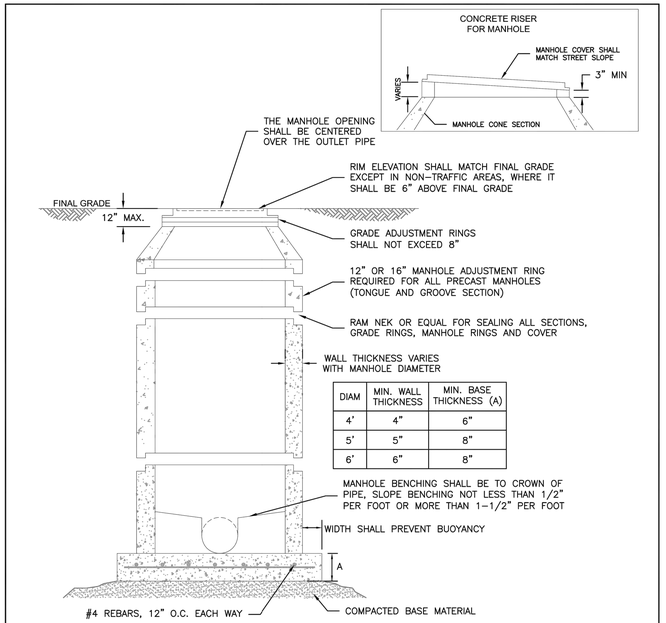

DIAM	MIN. WALL THICKNESS	MIN. BASE THICKNESS (A)
4'	4"	6"
5'	5"	8"
6'	6"	8"

NOTES:

1. ALL CONCRETE SHALL HAVE A MINIMUM COMPRESSIVE STRENGTH OF NOT LESS THAN 4000 PSI @ 28 DAYS AND DESIGNED FOR HS-20 LOADING CONDITIONS.
2. ALL CONCRETE SHALL BE MECHANICALLY VIBRATED.
3. FOR CAST IN PLACE MANHOLES, DO NOT DROP CONCRETE A DISTANCE OF MORE THAN 5' UNLESS APPROVED BY COLORADO SPRINGS UTILITIES.
4. 3/4" CRUSHED ROCK REQUIRED UNDER BASE TO A DEPTH OF 6" UP TO SPRINGLINE OF PIPE, 2'-3' RADIUS AROUND BASE.
5. ALL STEPS SHALL BE REMOVED FOLLOWING CONSTRUCTION. SEE SECTION 4.2.H.1.
6. STRUCTURAL REINFORCEMENT SHALL COMPLY TO ASTM C-478. ASTM C-478 SHALL BE STAMPED ON THE OUTSIDE OF THE MANHOLE.

Colorado Springs Utilities
It's how we're all connected

STANDARD CONCRETE MANHOLE

C3-1

DATED 12/2015

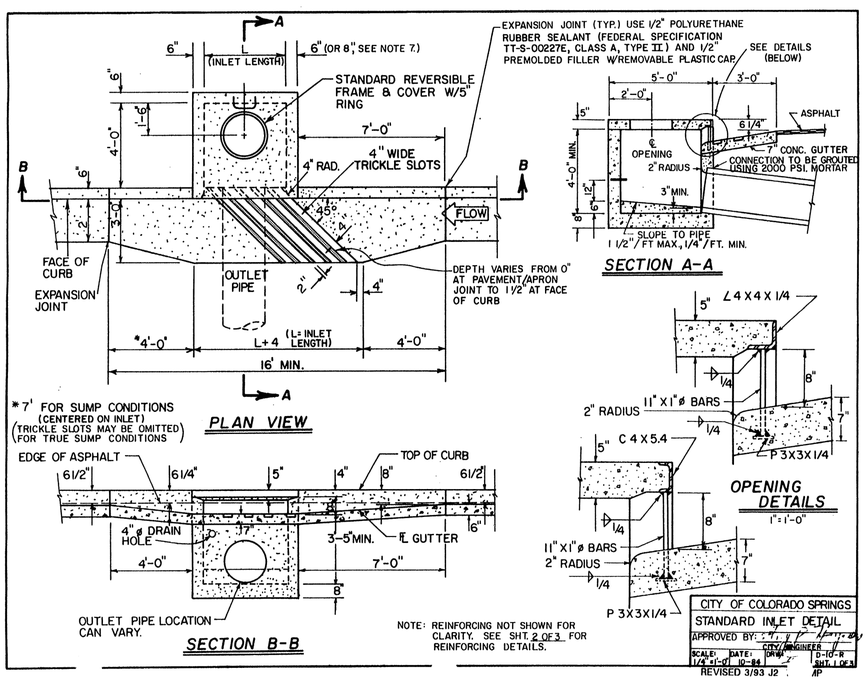

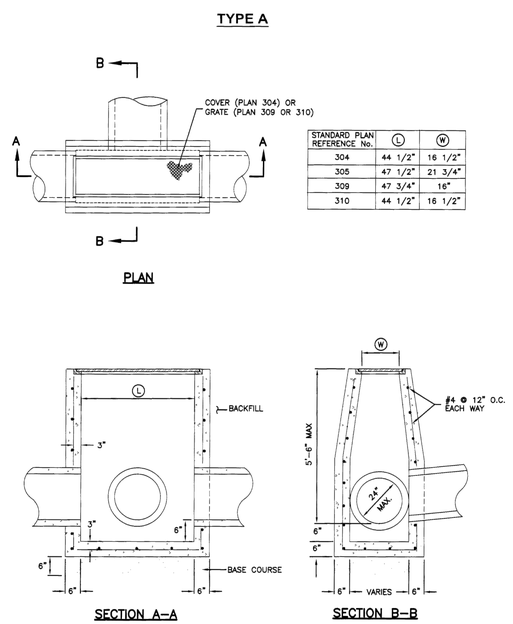

STANDARD PLAN REFERENCE No.	L	W
304	44 1/2"	16 1/2"
305	47 1/2"	21 3/4"
309	47 3/4"	16"
310	44 1/2"	16 1/2"

Cleanout box

Plan 331 Sheet 1 of 3

April 2010

177

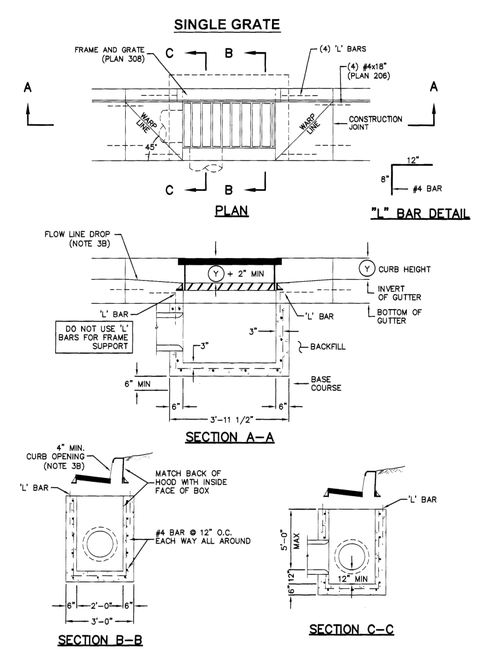

Catch basin

Plan 315 Sheet 1 of 2

September 2010

155

NO.	REVISIONS	BY	DATE

PROJECT ENGINEER: LP
DESIGNER: DL

ELEVATE ENGINEERING
492 WEST 1200 NORTH
SPRINGVILLE, UT 84663
PHONE: (801) 718-5993
lorwin@elevateeng.com

ELEVATE ENGINEERING

QUICK QUACK CONSTITUTION
UTILITY DETAILS
2437 MARKSHEFFEL ROAD COLORADO SPRINGS, CO 80951

COLORADO LICENSED LORWIN POLLOCK 12/20/2019 0054520 PROFESSIONAL ENGINEER

SHEET: C-5

DATE: Mar 12, 2019

\\Mac\Home\Elevate Engineering Dropbox\QQ CO Colorado Springs Constitution\QQ CO CONSTITUTION 1H.dwg — — Mar 12, 2019-2:30pm

LIVE DESIGN
WWW.LIVEDSGN.COM

PROJECT NO: 18-17
2437 MARKSHEFFEL ROAD
COLORADO SPRINGS, CO

REFERENCE NOTES SCHEDULE

SYMBOL	DESCRIPTION	QTY
I-01	PLANTING AREAS. WOOD MULCH. SEE SPECIFICATIONS.	12,583 sf
I-02	EXISTING PARKSTRIP TO REMAIN.	

PLANT SCHEDULE

CONIFERS	BOTANICAL NAME / COMMON NAME	CONT	CAL	SIZE	QTY
	Abies concolor `Candicans` / Candicans White Fir	B & B		6`	3
	Pinus aristata / Bristlecone Pine	B & B		6`	1
DECIDUOUS TREES	**BOTANICAL NAME / COMMON NAME**	**CONT**	**CAL**	**SIZE**	**QTY**
	Fraxinus pennsylvanica `Summit` / Summit Ash	B & B	1.5"Cal		6
	Prunus virginiana `Canada Red` / Canada Red Chokecherry	B & B	1" Cal		6
SHRUBS	**BOTANICAL NAME / COMMON NAME**	**CONT**			**QTY**
AM	Arctostaphylos uva-ursi `Massachusetts` / Massachusetts Manzanita	5 gal			28
CE	Cercocarpus montanus / Alderleaf Mountain Mahogany	5 gal			7
CF	Cornus stolonifera `Farrow` / Arctic Fire Dogwood	5 gal			70
Jb	Juniperus horizontalis `Blue Chip` / Blue Chip Juniper	5 gal			41
PB	Prunus besseyi `Pawnee Buttes` / Sand Cherry	5 gal			44
Rf	Rhamnus frangula `Columnaris` / Tall Hedge Buckthorn	5 gal			10
ANNUALS/PERENNIALS	**BOTANICAL NAME / COMMON NAME**	**CONT**			**QTY**
Wg	Gaura lindheimeri / Wandflower	1 gal			40
PF	Penstemon x `Firebird` / Firebird Beard Tongue	1 gal			41
GRASSES	**BOTANICAL NAME / COMMON NAME**	**CONT**			**QTY**
M	Muhlenbergia montana / Mountain Muhly	1 gal			32
Sg	Panicum virgatum / Switch Grass	1 gal			51

PLANT REQUIREMENTS:

TOTAL SITE/LOT AREA: 45,371 SF

TOTAL INTERNAL LANDSCAPE REQUIRED (5%): 2,268.55 SF.
TOTAL INTERNAL LANDSCAPE PROVIDED: 12,583 SF.

TOTAL INTERNAL TREES REQUIRED: (2,268.55 SF/ 500 SF= 4.5 TREES. ROUNDED UP TO 5.
TOATL INTERNAL TREES PROVIDED: 9. (4 CONIFERS, 2 SHADE TREES, 2 ORNAMENTAL TREES.)

TOTAL STREET TREES REQUIRED: 8.
TOTAL STREET TREES PROVIDED: 8.

DUE TO THE SCALE AND NATURE OF THE SITE, ONLY ONE HYDROZONE WAS NEEDED.

Name of project: QUICK QUACK CARWASH **Date:** 19 DECEMBER 2018

Climate zone (from Figure 4 of Landscape Policy Manual) - ***circle one:***

Foothills (Foothills & Plains) Plains

Plant Communities
- to be labeled by number(s) on diagram:

1 — Semiarid Shrublands
2 — Pinon-Juniper Woodlands
3 — Prairie
4 — Lower Elevation Riparian
5 — Foothill Shrublands
6 — Ponderosa Pine Forest
7 — Upper Elevation Riparian
8 — Douglas-fir Forest

Hydrozones (supplemental water)
- to be labeled by letter(s) on diagram:

V - Very Low (0 to 7 inches per year)

L - Low (7 to 15 inches per year)

M - Moderate (15 to 25 inches per year)

H - High (more than 25 inches per year)

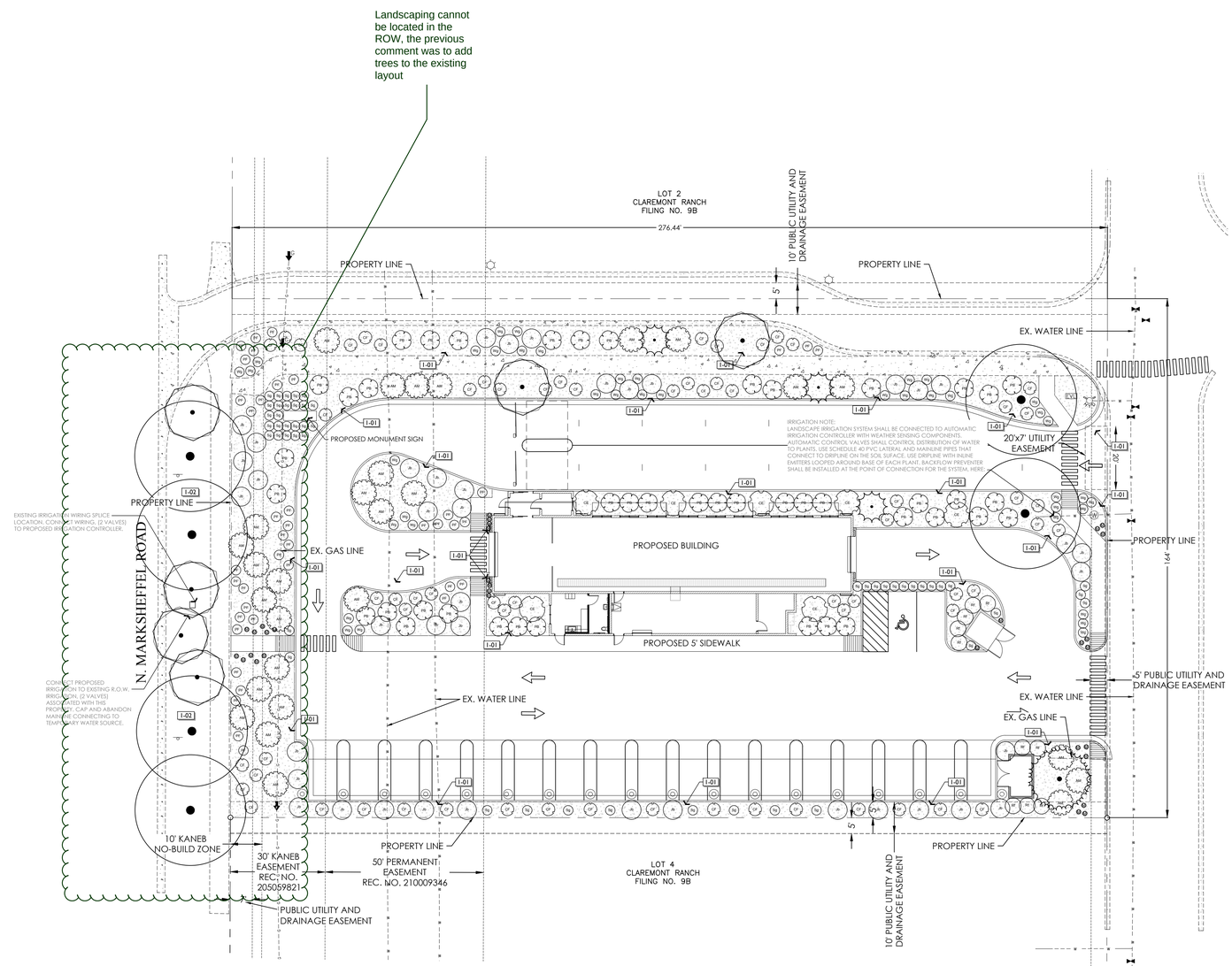

NOTES:
SEE CIVIL ENGINEERING PLANS FOR SITE ZONING, GRADING AND OTHER PERTINENT INFORMATION.

QUICK QUACK CONSTITUTION

ATTENTION: PRIOR TO PERFORMING ANY WORK ON THIS PLAN CONTRACTOR SHALL IDENTIFY THROUGH BLUESTAKES AND ON-SITE OBSERVATION ANY AND ALL UTILITIES AND HAZARDS OR CONDITIONS THAT MAY PREVENT WORK FROM BEING PERFORMED ACCORDING TO THESE PLANS ABOVE OR BELOW GROUND. IF CONDITIONS ARE FOUND THAT MAY PREVENT WORK FROM BEING PERFORMED AS PER PLAN, CONTRACTOR SHALL CONTACT LANDSCAPE ARCHITECT PRIOR TO PROCEEDING. ANY DAMAGE TO UTILITIES SHALL BE THE CONTRACTORS SOLE RESPONSIBILITY (I.E. ELECTRICAL, GAS, WATER,SEWER, ETC.). EVERY EFFORT HAS BEEN MADE TO ENSURE ACCURACY WITH THESE DRAWINGS, QUANTITIES (If and if) LISTED ARE FOR REFERENCE ONLY. CONTRACTOR SHALL VERIFY ALL MEASUREMENTS AND QUANTITIES ON THESE PLANS. ARCHITECT SHALL NOT BE RESPONSIBLE FOR DISCREPANCIES BETWEEN QUANTITIES LISTED IN LEGENDS AND PLAN. WHERE DISCREPANCIES EXIST BETWEEN SPECIFICATIONS, DETAILS, AND/OR DRAWINGS, CONTRACTOR SHALL CONTACT LANDSCAPE ARCHITECT PRIOR TO PROCEEDING. CONTRACTOR SHALL INSPECT THE SITE TO VERIFY THAT DRAWINGS ARE CONSISTENT WITH SURVEYED BASE INFORMATION. DURING CONSTRUCTION IF DISCREPANCIES ARE FOUND BETWEEN THESE PLANS AND THE SITE, CONTRACTOR SHALL CONTACT THE LANDSCAPE ARCHITECT PRIOR TO PROCEEDING.

1"=20' (24"X36") NORTH ^

R. AUGUST BATEMAN 1329 08/27/2019 Original Date of Licensure STATE OF COLORADO LICENSED LANDSCAPE ARCHITECT

ENG/ARCH: ELEVATE
DRAWN BY: RAB
REVIEWED BY: RAB

DATE: 06 Mar 2019

PLANTING PLAN
LP101

NOTES:
1. PRUNE ONLY DEAD OR BROKEN BRANCHES AND WEAK OR NARROW CROTCHES.
2. KEEP PLANTS MOIST AND SHADED UNTIL PLANTING.
3. DO NOT FERTILIZE FOR AT LEAST ONE GROWING SEASON.
4. AMENDED BACKFILL SHALL BE 1/3 COMPOST (PREFERABLY CLASSIFIED) AND 2/3 NATIVE AND/OR IMPORTED TOPSOIL.
5. ALL SHRUBS IN ROCK AREAS TO RECEIVE SHREDDED MULCH RINGS.
6. DEEP WATER ALL PLANTS AT TIME OF PLANTING.

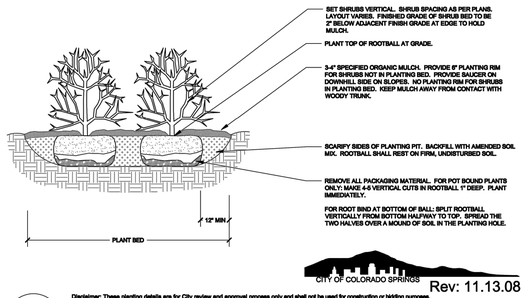

Disclaimer: These planting details are for City review and approval process only and shall not be used for construction or bidding purposes.

5 / LD501 — SHRUB PLANTING DETAIL

NOT TO SCALE — SECTION

NOTES:
1. DO NOT REMOVE OR CUT LEADER.
2 PRUNE ONLY DEAD OR BROKEN BRANCHES IMMEDIATELY PRIOR TO PLANTING.
3. DO NOT REMOVE ANY DOUBLE LEADER, UNLESS OTHERWISE DIRECTED BY OWNERS REPRESENTATIVE.
4. KEEP PLANTS MOIST AND SHADED UNTIL PLANTING.
5. AMENDED BACKFILL SHALL BE 1/3 COMPOST (PREFERABLY CLASSIFIED) AND 2/3 NATIVE AND/OR IMPORTED TOPSOIL.
6. MARK THE NORTH SIDE OF TREE IN THE NURSERY, AND ROTATE TREE TO FACE NORTH AT THE SITE WHENEVER POSSIBLE.
7. PINE AND SPRUCE TREES TO BE SPRAYED FOR IPS BARK BEETLE PRIOR TO PLANTING. COORDINATE WITH CITY FORESTRY FOR CURRENT INSECT AND DISEASE RECOMMENDATIONS PRIOR TO PLANTING.
8. ALL TREES TO BE DEEP WATERED AT TIME OF PLANTING.

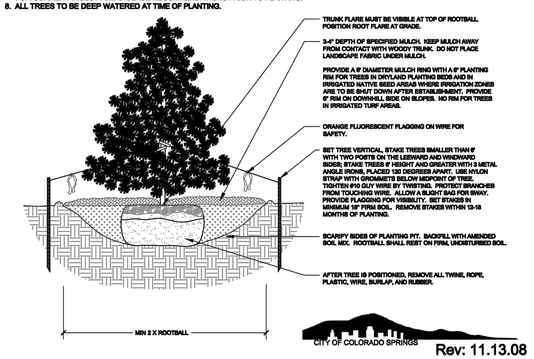

Disclaimer: These planting details are for City review and approval process only and shall not be used for construction or bidding purposes.

3 / LD501 — EVERGREEN TREE PLANTING DETAIL

NOT TO SCALE — SECTION

NOTES:
1. MARK THE NORTH SIDE OF TREE IN THE NURSERY, AND ROTATE TREE TO FACE NORTH AT THE SITE WHENEVER POSSIBLE.
2. AT TIME OF PLANTING, DO NOT REMOVE OR CUT LEADER AND PRUNE ONLY DEAD OR BROKEN BRANCHES, CROSS OVER BRANCHES, AND WEAK OR NARROW CROTCHES. SOME INTERIOR TWIGS AND LATERAL BRANCHES MAY BE PRUNED. HOWEVER, DO NOT REMOVE THE TERMINAL BUDS OF BRANCHES THAT EXTEND TO THE EDGE OF THE CROWN.
3. STRUCTURAL PRUNING SHOULD NOT BEGIN UNTIL AFTER ESTABLISHMENT PERIOD, USUALLY TWO GROWING SEASONS.
4. KEEP PLANTS MOIST AND SHADED UNTIL PLANTING.
5. DO NOT FERTILIZE FOR AT LEAST ONE GROWING SEASON.
6. AMENDED BACKFILL SHALL BE 1/3 COMPOST (PREFERABLY CLASSIFIED) AND 2/3 NATIVE AND/OR IMPORTED TOPSOIL.
7. WRAP TRUNK ON EXPOSED SITES AND SPECIES WITH THIN BARK. USE ELECTRICAL OR DUCT TAPE, NOT TWINE.
8. COORDINATE WITH CITY FORESTRY FOR CURRENT INSECT AND DISEASE RECOMMENDATIONS PRIOR TO PLANTING.
9. DEEP WATER ALL PLANTS AT TIME OF PLANTING.

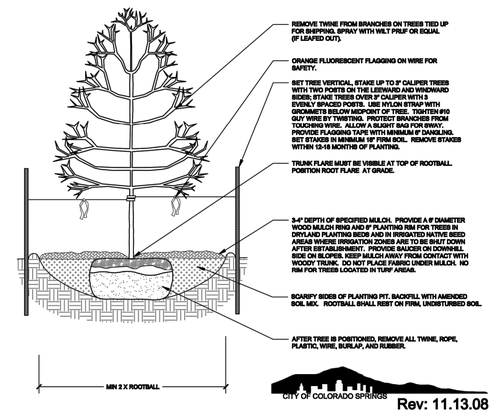

Disclaimer: These planting details are for City review and approval process only and shall not be used for construction or bidding purposes.

1 / LD501 — DECIDUOUS TREE PLANTING DETAIL

NOT TO SCALE — SECTION

NOTES:
1. PRUNE ONLY DEAD OR BROKEN BRANCHES AND WEAK OR NARROW CROTCHES.
2. KEEP PLANTS MOIST AND SHADED UNTIL PLANTING.
3. DO NOT FERTILIZE FOR AT LEAST ONE GROWING SEASON.
4. AMENDED BACKFILL SHALL BE 1/3 COMPOST (PREFERABLY CLASSIFIED) AND 2/3 NATIVE AND/OR IMPORTED TOPSOIL.
5. ALL SHRUBS IN ROCK AREAS TO RECEIVE SHREDDED MULCH RINGS.
6. DEEP WATER ALL PLANTS AT TIME OF PLANTING.

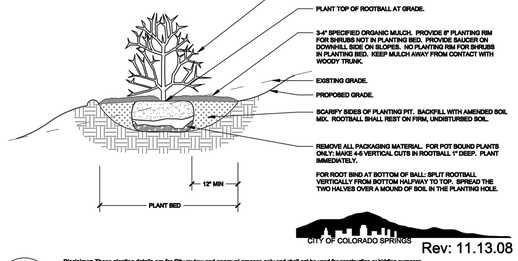

Disclaimer: These planting details are for City review and approval process only and shall not be used for construction or bidding purposes.

6 / LD501 — SHRUB PLANTING ON SLOPES DETAIL

NOT TO SCALE — SECTION

NOTES:
1. DO NOT REMOVE OR CUT LEADER.
2 PRUNE ONLY DEAD OR BROKEN BRANCHES IMMEDIATELY PRIOR TO PLANTING.
3. DO NOT REMOVE ANY DOUBLE LEADER, UNLESS OTHERWISE DIRECTED BY OWNERS REPRESENTATIVE.
4. KEEP PLANTS MOIST AND SHADED UNTIL PLANTING.
5. AMENDED BACKFILL SHALL BE 1/3 COMPOST (PREFERABLY CLASSIFIED) AND 2/3 NATIVE AND/OR IMPORTED TOPSOIL.
6. MARK THE NORTH SIDE OF TREE IN THE NURSERY, AND ROTATE TREE TO FACE NORTH AT THE SITE WHENEVER POSSIBLE.
7. PINE AND SPRUCE TREES TO BE SPRAYED FOR IPS BARK BEETLE PRIOR TO PLANTING. COORDINATE WITH CITY FORESTRY FOR CURRENT INSECT AND DISEASE RECOMMENDATIONS PRIOR TO PLANTING.
8. ALL TREES TO BE DEEP WATERED AT TIME OF PLANTING.

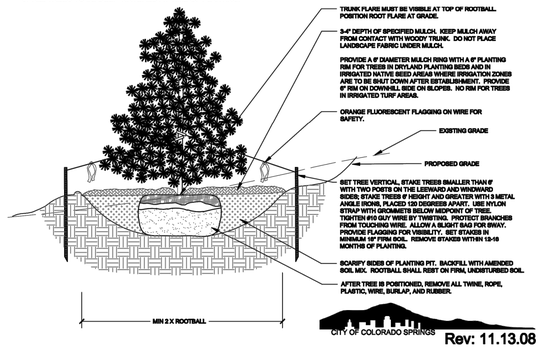

Disclaimer: These planting details are for City review and approval process only and shall not be used for construction or bidding purposes.

4 / LD501 — EVERGREEN TREE PLANTING ON SLOPES DETAIL

NOT TO SCALE — SECTION

NOTES:
1. MARK THE NORTH SIDE OF TREE IN THE NURSERY, AND ROTATE TREE TO FACE NORTH AT THE SITE WHENEVER POSSIBLE.
2. AT TIME OF PLANTING, DO NOT REMOVE OR CUT LEADER AND PRUNE ONLY DEAD OR BROKEN BRANCHES, CROSS OVER BRANCHES, AND WEAK OR NARROW CROTCHES. SOME INTERIOR TWIGS AND LATERAL BRANCHES MAY BE PRUNED. HOWEVER, DO NOT REMOVE THE TERMINAL BUDS OF BRANCHES THAT EXTEND TO THE EDGE OF THE CROWN.
3. STRUCTURAL PRUNING SHOULD NOT BEGIN UNTIL AFTER ESTABLISHMENT PERIOD, USUALLY TWO GROWING SEASONS.
4. KEEP PLANTS MOIST AND SHADED UNTIL PLANTING.
5. DO NOT FERTILIZE FOR AT LEAST ONE GROWING SEASON.
6. AMENDED BACKFILL SHALL BE 1/3 COMPOST (PREFERABLY CLASSIFIED) AND 2/3 NATIVE AND/OR IMPORTED TOPSOIL.
7. WRAP TRUNK ON EXPOSED SITES AND SPECIES WITH THIN BARK. USE ELECTRICAL OR DUCT TAPE, NOT TWINE. OCTOBER 31 AND REMOVE MARCH 31 FOR THE PIKES PEAK REGION.
8. COORDINATE WITH CITY FORESTRY FOR CURRENT INSECT AND DISEASE RECOMMENDATIONS PRIOR TO PLANTING.
9. DEEP WATER ALL PLANTS AT TIME OF PLANTING.

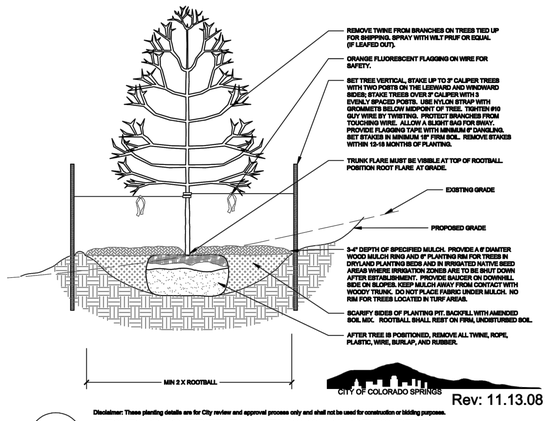

Disclaimer: These planting details are for City review and approval process only and shall not be used for construction or bidding purposes.

2 / LD501 — DECIDUOUS TREE PLANTING ON SLOPES DETAIL

NOT TO SCALE — SECTION

NOTES:
1. KEEP PLANTS MOIST AND SHADED UNTIL PLANTING.
2. PLANT GROUND COVERS AND PERENNIALS LEVEL AND AT GRADE.
3. PRUNE ALL DEAD OR BROKEN PARTS PRIOR TO PLANTING.
4. AMENDED BACKFILL SHALL BE 1/3 COMPOST (PREFERABLY CLASSIFIED) AND 2/3 NATIVE AND/OR IMPORTED TOPSOIL.
5. ALL PERENNIALS PLANTED IN ROCK MULCH AREAS TO HAVE ORGANIC MULCH RINGS AROUND THE BASE OF THE PLANT.

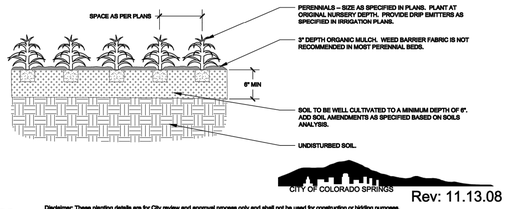

Disclaimer: These planting details are for City review and approval process only and shall not be used for construction or bidding purposes.

7 / LD501 — PERENNIAL/GROUNDCOVER PLANTING DETAIL

NOT TO SCALE — SECTION

ATTENTION: PRIOR TO PERFORMING ANY WORK ON THIS PLAN CONTRACTOR SHALL IDENTIFY THROUGH BLUESTAKES AND ON-SITE OBSERVATION ANY AND ALL UTILITIES AND HAZARDS OR CONDITIONS THAT MAY PREVENT WORK FROM BEING PERFORMED ACCORDING TO THESE PLANS ABOVE OR BELOW GROUND. IF CONDITIONS ARE FOUND THAT MAY PREVENT WORK FROM BEING PERFORMED AS PER PLAN, CONTRACTOR SHALL CONTACT LANDSCAPE ARCHITECT PRIOR TO PROCEEDING. ANY DAMAGE TO UTILITIES SHALL BE THE CONTRACTORS SOLE RESPONSIBILITY (I.E. ELECTRICAL, GAS, WATER,SEWER, ETC.). EVERY EFFORT HAS BEEN MADE TO ENSURE ACCURACY WITH THESE DRAWINGS. QUANTITIES (If and if) LISTED ARE FOR REFERENCE ONLY. CONTRACTOR SHALL VERIFY ALL MEASUREMENTS AND QUANTITIES ON THESE PLANS. ARCHITECT SHALL NOT BE RESPONSIBLE FOR DISCREPANCIES BETWEEN QUANTITIES LISTED IN LEGENDS AND PLAN. WHERE DISCREPANCIES EXIST BETWEEN SPECIFICATIONS, DETAILS, AND/OR DRAWINGS, CONTRACTOR SHALL CONTACT LANDSCAPE ARCHITECT PRIOR TO PROCEEDING. CONTRACTOR SHALL INSPECT THE SITE TO VERIFY THAT DRAWINGS ARE CONSISTENT WITH SURVEYED BASE INFORMATION. DURING CONSTRUCTION IF DISCREPANCIES ARE FOUND BETWEEN THESE PLANS AND THE SITE, CONTRACTOR SHALL CONTACT THE LANDSCAPE ARCHITECT PRIOR TO PROCEEDING.

LIVE DESIGN
WWW.LIVEDSGN.COM

PROJECT NO: 18-17
2437 MARKSHEFFEL ROAD
COLORADO SPRINGS, CO

QUICK QUACK CONSTITUTION

R. AUGUST BATEMAN 1329 — 08/22/2018 — Original Date of Licensure — STATE OF COLORADO — LICENSED LANDSCAPE ARCHITECT

ENG/ARCH: ELEVATE
DRAWN BY: RAB
REVIEWED BY: RAB

DATE: 06 Mar 2019

PLANTING DETAILS
LD501

SECTION 1 - PLANT MATERIAL
PART 1 - GENERAL

1.01 SCOPE OF WORK

A. Work as evident on drawings and specified herein or required to complete all landscaping and shall include, but not necessarily limited to the following work:

1. Furnish imported topsoil from outside sources as needed.(see sub-section 2.01.)

2. Ensure all necessary permits are obtained prior to construction and staging.

3. Excavate tree/shrub pits.

4. Provide and plant all materials indicated on plan and plant list.

5. Stake and protect all trees and planted areas as specified and detailed.

6. Clean all areas prior to Acceptance of the Work, including debris, stains, and dirt from walks and other surfaces.

B. These specifications are complimentary to the drawings.

C. Related Sections:

SECTION 2 - Turf Sod and Soil Preparation

1.02 QUALITY ASSURANCE

A. Regulatory Requirements

1. Comply with applicable requirements of Federal, State and Local laws, regulations and codes having jurisdiction at the project site.

Contractor shall be responsible for certificates of inspection of plant material that may be required by Federal and Local authorities to accompany shipments of plants.

Reference Standards

1. "Standardized Plant Name" by the American Joint Committee of Horticultural Nomenclature.

2. "American Standard of Nursery Stock" by the American Association of Nurseryman.

3. American National Standards Institute (ANSI); Publication Z60.1.

C. Substitutions

1. Substitutions of plant material will not be permitted unless authorized in writing by the Landscape Architect. If proof is submitted that any plant specified is not obtainable, a proposal will be considered for use of the nearest equivalent size or variety with corresponding adjustment of Contract Price. Such proof shall be substantiated and submitted in writing to the Landscape Architect at least thirty (30) days prior to start of the work under this Section. These provisions shall not relieve Contractor of the responsibility of obtaining specified materials in advance if special growing conditions or other arrangements must be made in order to supply specified materials.

Source Quality Control

1. Plants shall be subject to inspection and approval by the Landscape Architect/Owner at place of growth and upon delivery for conformity to specifications. Such approvals shall not impair the right of inspection and rejection during progress of the Work. Submit written request for inspection of plant material at place of growth and quantity of plants to be inspected. The Landscape Architect reserves the right to refuse inspection at this time if, in his judgement, a sufficient quantity of plants is not available for inspection.

2. All plants may be inspected at the nursery by the Landscape Architect or Owner and shall be tagged with self-locking tags. Plants delivered to the site without these tags or with broken tags shall be sufficient reason for rejection.

Contractor's Qualifications

1. All bidders shall be required to present proof of their qualifications, contract sample, Utah state licensure, insurance coverage, experience, and ability to perform the scope of work set forth in these specifications according to the following construction deadlines pending unforeseen delays related to the weather or other conditions outside the contractors control.

1.03 PROJECT PERSONNEL AND SITE PROTECTION

ATTENTION:

The Contractor shall have a designated foreman in direct and personal charge of the work, and the foreman shall be on the job at least eighty-five (85) percent of the working hours. The Owner's Authorized Representative may "shut down" the work under contract if the supervision is not, in his opinion, adequate to protect the interests of the Owner. Such "shut down" time to be counted as working days and will not extend the time of the contract.

All existing site elements including but not limited to the following shall be protected: All existing utilities, existing hardscapes (drives/curbs/walks/patios), etc. shall be protected from impact damage of any sort, staining from leaky trucks or equipment, or other damage.

1.04 PACKAGING, DELIVERY, STORAGE AND HANDLING

A. Plants shall be properly marked for identification and for checking. Each block of plants and at least 25% of each variety of separate plants in any one shipment shall have legible labels securely attached upon delivery to the site.

Product Handling:

During hot weather and when practical, the contractor may be required to transport plant materials between sunset and sunrise if transported in an open trailer or un-refrigerated box.

Dug material should be maintained and watered as required at the nursery to guarantee their vitality and health until shipping.

Protect all trunks, stems, branches, and root balls during tree tying, wrapping and loading operations from damage.

Load balls or containers onto transport vehicle and secure in a manner that protects the structural integrity of the root balls.

The contractor shall be solely responsible for the safe transportation of plants to the site and their condition upon arrival. Trees damaged, dehydrated or abused during transit or storage will be rejected.

Plant materials shall not be stored on concrete or asphalt or left exposed to the sun.

Roots and balls of plants shall be adequately protected at all times from the sun and drying winds.

The Landscape Architect may inspect any phase of this operation and may reject any plant material improperly handled during any phase of this operation.

Nothing in this Section shall be interpreted as relieving the contractor of the responsibility of providing healthy, viable plants, nor shall it have any effect upon the terms of the warranty specified herein.

Deliver packaged materials in containers showing weight, analysis and name of manufacturer. Protect materials from deterioration during delivery, and while stored at the site.

Delivery and plantings, storage of dry bulk materials and other shall be coordinated with project General Contractor to ensure appropriate staging area. Protect dry bulk materials from inclement weather conditions such as wind and moisture.

1.06 SUBMITTALS

A. Furnish two (1) copies of manufacturer's literature, plans, samples, certifications, delivery tickets, or laboratory analytical data for approval by the Landscape Architect prior to commencement of all work under this contract for the following items:

1. Specified granular and tablet Fertilizers (certification, rate of application and number to tablets per plant pit)
2. Weed control, Pre-emergent and anti-desiccant (certification)
3. Tree guys (literature)
4. Lawn Edging (literature) See plan.
5. Wood Mulch (sample)

Submit proposed plant placement schedule to owner, indicating dates for each type of landscape work during normal seasons for such work in area of site. Once accepted, revise dates only as approved in writing, after documentation of reasons for delay.

1.07 PROJECT WARRANTY

A. Warranty trees and other plant materials, for a period of one year after date of substantial completion, against defects including death and unsatisfactory growth, except for defects resulting from neglect by Owner, abuse or damage by others, or unusual phenomena or incidents which are beyond Landscape Installer's control.

B. Remove and replace trees or other plants found to be dead or in unhealthy condition during warranty period. Replace trees or other plants that are in doubtful condition at end of warranty period; unless, in opinion of Architect, it is advisable to extend warranty period for a full growing season.

C. All replacements shall be plants of the same kind, size, and quality as originally specified and they shall be furnished, planted, guyed and maintained as specified at no additional cost.

D. Another inspection shall be conducted at end of extended warranty period to determine acceptance or rejection. Only one replacement (per tree or plant) will be required at end of warranty period, except for losses or replacements due to failure to comply with specified requirements.

.

PART 2 - PRODUCTS

2.01 SOIL, SOIL AMMENDMENTS

A. Topsoil may or may not be stockpiled on site for contractor use.

Contractor shall ensure the following amount of topsoil is found in all planter and lawn areas over a non-compacted sub-grade

- Planter Areas: 12 inch depth.

Contractor shall amend top soil on site based on the results of soil test.

Contractor shall have agronomy soils test performed or provide a soil certificate for proposed imported soil. Test results shall be submitted to Landscape Architect for approval prior to delivery of the topsoil to jobsite. Imported topsoil shall be obtained from well-drained arable land and shall be free from sub-soil, refuse, roots, heavy or stiff clay, stones 1 inch and larger in largest dimension, coarse sand, sticks, brush, litter, and other deleterious substances. Amend soil as needed to meet the ***'Ideal'*** parameters in the chart below:

Soil Parameter	Acceptable	Ideal	Non-Ideal – Possibly Toxic	Notes
pH	3.5-8.4	6.0-7.3	$<5.5^{A}$ and $>8.5^{C}$	low pH corrected by addition of lime (lab can give amount needed); high pH difficult to correct—instead solve sodium problems if any and deal with fertility issues caused by high pH
EC, dS/m	< 2.5	< 1.0-1.5	> 4.0-6.0	lower salt content by leaching with good quality water (solve sodium problems if any prior to leaching)
$CaCO_3$ (calcareousness), %	<50	<1	>30-80	difficult to correct;generally requires more phosphorus and some micronutrient fertilizers
SAR^{A} (ESP)	< 8 (< 10)	< 4 (< 5)	> 13 (>16)	lower by addition of gypsum or similar (lab can give amounts needed)
Clay, %	> 1.0	> 3.0	N/A	
Sand $%^{B}$	< 85%	< 75%	N/A	
Silt/Clay ratio	> 2 if total of two is 25-35% (ratio is not critical if outside this range)		N/A	
CEC^{C}	>12	15-35	N/A	
color	all	red, brown, black (avoid gray & yellow)	N/A	
aggregate (1-20 mm); stability, not dispersed (clouds)	> 1 hour	> 2 hours	N/A	
Saturated infiltration Rate (as measured after 3 full irrigations)	>0.2 inch/hour	>0.6 inch/hour	<0.1 inch/hour	difficult to correct; select different soil
Subsoil drainage rate	> 0.04 inch/hour	> 0.1 inch/hour	< 0.01 inch/hour	difficult to correct; select different soil
Bulk Density, g/cm^3	1.2-1.6	1.1-1.5	> 1.7-1.8	correct with tillage, but does not always correct problem permanently
NO_3-N^{D}, ppm	any	any	see EC	add fertilizer to meet plant needs
P - Bicarbonate, ppm	any	10-60 ppm	N/A	add fertilizer to meet plant needs; if P is high = environmental problems
P - Bray P1, ppm (only noncalcareous)	any	20-80 ppm	N/A	add fertilizer to meet plant needs; if P is high = environmental problems
P - Mehlich 3, ppm (only noncalcareous)	any	22-90 ppm	N/A	add fertilizer to meet plant needs; if P is high = environmental problems
K, ppm	100-300	> 300	N/A	add fertilizer to meet plant needs
Ca, ppm	> 300	> 500	N/A	add fertilizer to meet plant needs
Mg, ppm	>50	100-400	N/A	add fertilizer to meet plant needs
Na	see SAR (ESP)			
S^{E}, ppm	any	<200	see EC	add fertilizer to meet plant needs
Zn, ppm	> 1.0	< 1.0-5.0	> 1007	add fertilizer to meet plant needs if value is low; if too high then reject soil
Fe, ppm	> 4	> 6 (and pH < 7.2 or tolerant species)	Unlikely	
Mn, ppm	> 6	> 8	> 807	add fertilizer to meet plant needs if value is low; if too high then reject soil
Cu, ppm	0.2-2.0	0.4-2.0	> 207	add fertilizer to meet plant needs if value is low; if too high then reject soil
B, ppm	0.8-2.0	1-2	>2-4	add fertilizer to meet plant needs if value is low; if too high leach B from soil
Cl, ppm	any	12-175	> 175-790	add fertilizer to meet plant needs if value is low; if too high leach Cl from soil
*Al, ppm	1.0-10	0	> 10-20	if high, raise soil pH to greater than 5.5 with lime (see pH)

2.02 PLANT MATERIALS

A. Plants shall be typical of their species and variety, have normal growth habits, well developed branches, dense foliage, vigorous, fibrous root systems.

Plants shall be free from defects and injuries. All shipments of plant stock shall comply with existing State and Federal laws and regulations governing plant disease and infection and interstate movement of nursery stock.

Quality and size of plants, spread of roots, and size of balls shall be in accordance with USA-Z60.1-1973, "American Standard for Nursery Stock" as published by the American Association of Nurserymen. The caliper of trees shall be measured six (6) inches above the surface of the ground. Plant lists indicate minimum size requirements only. Plant materials shall be equal to or greater in size than those specified.

Plants shall not be pruned before planting.

All trees must have straight trunks with single leader intact, except in the case of specimen plants or otherwise indicated by the plan. Bark shall be free of abrasion, all cuts over 1-1/4" shall have callused over.

Trees shall not be accepted which have had their leaders cut or which have leaders damaged so that cutting is necessary.

Trees and shrubs shall be true to name.

Upon request, Contractor shall furnish the landscape architect a list indicating the source of each of the different plants to be supplied.

All Plants shall be ball and burlap or container grown unless otherwise indicated on the Plant Material List.

All plants shall be even in growth with balanced root and top growth and shall be No.1 in grade or type conforming to the latest edition of American Standard for Nursery Stock.

Plant material shall be nursery grown and shall have received the proper fertilizing, watering, root pruning and such other care as is normally given for a particular plant under nursery conditions. All plants shall be hardy under climate conditions similar to those in the locality of the project.

All material shall be freshly dug according to American Standard for Nursery Stock. All ball and burlap material shall be of firm earth from the original soil in which the plant grew. The ball shall be wrapped with burlap and tightly tied or enclosed in a tight fitting wire basket to hold it firm and intact. Any plants with broken or loose balls or manufactured balls will be rejected.

All plant material in containers shall have been established in that container. Any newly potted material will be rejected.

2.03 FERTILIZER FOR PLANT MATERIAL

A. Fertilize trees and shrubs with a fertilizer tablet having a slow release nitrogen, phosphorus and potash (20-10-5) plus sulphur and iron formulation. 21 gram tablets manufactured by Agriform or equal. Jobe Tree Spikes are acceptable.
Execution: Position plant in hole and backfill by ½ the ball root height. Place tablet(s) beside the root ball about 1 inch from root tips. Do not place tablets in the bottom of the plant hole. Complete backfill, tamp and water.

- 1-2 Gallon Size: 1 Tablet
- 3-5 Gallon Size: 3 Tablets
- 15 Gallon Size: 7 Tablets
- 1.5" Caliper Trees: 6 Tablets
- 2" Caliper Trees: 8 Tablets
- 3" Caliper Trees: 12 Tablets

Any fertilizer that becomes caked or otherwise damaged, making it unsuitable for use will not be accepted.

2.04 ORGANIC/INORGANIC MULCH

Provide and place minimum three inch depth of medium wood mulch. Mulch shall be brown in color. No weed barrier fabric shall be installed under organic mulch. Submit sample to owner for approval prior to bulk delivery.

2.05 WEED CONTROL / PRE-EMERGENT

During construction, landscape contractor shall ensure all installed landscaped areas remain weed free. All spray applicated weed control shall be applied by a certified chemical applicator and shall adhere to all local and state governing codes and manufacturer's recommended application rates and processes. Contractor shall be aware of high wind conditions and shall in no case apply weed control during a wind event that may carry product beyond it's desired location.

Pre-Emergent weed killer shall be granulated and shall be "Trefilan" or "Dacthal", or approved 12 month weed preventer.Product shall be delivered to the site in its original container, bearing the manufacturer's label and instructions for handling and application.
Pre-Emergent shall be applied by landscape contractor following final topsoil grade and plant placement and prior to organic mulch placement. Care shall be taken to avoid spreading of Pre-Emergent on adjacent hardscapes and lawn areas. Ensure proper coverage as per manufacturer's recommendation.

PART 3 - EXECUTION

3.01 GENERAL

A. Before commencing Contractor shall become familiar with and obtain any necessary permits required for staging and performing work on the property according to Colorado Springs City or other governing ordinances.

B Proceed with and complete landscape work as rapidly as portions of site become available, working within seasonal limitations for each kind of landscape work required.

C. Plant or install materials during normal planting seasons for each type of landscape work required. Correlate planting with specified maintenance periods to provide maintenance from date of substantial completion for that portion of the work. Actual planting shall be performed only when weather and soil conditions are suitable and in accordance with locally accepted practice and as approved by the landscape architect.

D. Contractor shall be responsible to determine location of all underground utilities and perform work in a manner which will in all cases avoid possible damage. Hand excavate, as required. Low voltage and line voltage electrical lines may exist throughout the site as well as drain lines and sumps. Very all locations with General Contractor.

E. The Contractor is responsible for all damage to these utilities. In the event that damage to existing utilities is found, the owner shall coordinate the repair and labor to fix the work and shall back charge the contractor for these services.

F. Contractor shall only layout quantity of plantings that can be installed same day. Following layout of plantings as per plans and prior to planting, landscape architect shall inspect layout for approval and may adjust as necessary prior to installation. Landscape contractor shall notify landscape architect 48 hours in advance of plants being placed.

G. If underground construction, obstructions, or large rocks are encountered in excavation of planting areas, other locations for the planting may be selected by the landscape architect.

H. Plant totals are for convenience only and are not guaranteed. Verify amounts shown on drawings. All planting indicated on drawings is required unless indicated otherwise.

3.02 PREPARATION OF PLANTING BEDS

A. The Contractor shall furnish and spread topsoil on planting bed areas as required to meet lines, grades and elevations as needed, after light rolling and natural settlement. Finish grade of all planting bed areas shall be minimum of 4 inch below grade of any adjacent hardscape to allow for 3" depth of organic mulch.

B. Where possible, light equipment shall be utilized to deliver and spread topsoil to planter areas. Sub-grade or topsoil shall not be driven on, placed or spread when ground is muddy from precipitation. Allow ground to adequately dry to avoid compaction of sub-grade and topsoil.

C. Fine grade planting bed areas to smooth, even surface with loose, uniformly fine texture. Roll, rake and drag planting bed areas, remove ridges and fill depressions, as required to meet finish grades. Limit fine grading to areas which can be planted immediately after grading.

D. Beds shall be raked smooth and put in first class condition before final acceptance and placement of pre-emergent weed control and organic mulch.

3.03 EXCAVATION FOR PLANTING

Obstruction Below Ground: Do not plant any plant with a large obstruction directly below the root ball. In the event that rock or obstructions are encountered in any plant pit excavation, alternate locations may be selected by the Landscape Architect.

Drainage: In the event that impervious rock or hardpan is encountered during digging operations, in tree pits or shrub pits, it shall be the responsibility of the Landscape Contractor to ensure proper drainage in all pits. Minimum drainage requirements shall be the loss of water at the rate of 6" drop in water level per hour. All rock or hardpan encountered shall be disposed of from the site.

Holes for trees and shrubs shall be three times (3x) the ball diameter for trees and two to three times (2-3x) the ball diameter for shrubs as per planting details where possible. Subsoil excavated from tree and shrub pits may be used as backfill material for planting if it is free from sub-soil, refuse, roots, heavy or stiff clay, stones 1 inch and larger in largest dimension, coarse sand, sticks, brush, litter, and other deleterious substances.. Mix excavated soil by 50% volume with imported topsoil prior to backfilling.

Tree rings in lawn areas, if any, shall be circular in outline, with a diameter at least two (2) feet greater than the diameter of the ball of each plant to be planted and edged with specified edging.

Where turf areas are damaged by planting operations, they shall be replaced by equal quality turf by the Landscape Contractor at no cost to the Owner.

Remove debris, rock, and other deleterious material excavated from plants pits from the site.

3.04 SETTING AND BACKFILLING PLANTS

Placing Plants: Plants shall be set with the root ball at the same natural relationship as it had in the nursery. The top of the root ball should be 1-2" above the finished grade. Plants shall be handled by the root ball, not by the trunk or by the stems. Balls must be handled carefully and the trees must be skidded (not dropped) into the hole.

Place specified fertilizer tablets as specified.

Backfill shall be worked around the ball and tamped to eliminate air pockets. Water plants when the hole is two-thirds (2/3) full of backfill.

At this point, any tie wire, twine, burlap, grow bags, etc., tied or wrapped around the stem or plant ball shall be loosened and pulled away from the plant. The burlap on the ball shall be laid back from the top of the ball and any excess burlap and ties shall be cutoff and removed from the planting except where wire cage prohibits removal of burlap. Wire cage shall not be removed.

Soil treatment: A pre-emergent herbicide such as "Dacthal" or "Treflan", or an approved equal shall be delivered to the site in its original container, bearing the manufacturer's label and instructions for handling and application. All trees and shrubs are to receive pre-emergent.

All plants shall be watered and straightened the same day as planted. No holes will be left open over night.

Container grown plants shall have containers cut open and the plants carefully removed so that the earth around roots of plant remain unbroken. Plants shall then be planted in the same manner as ball plants.

Plant trees after final grades are established and prior to planting/placement of lawns, unless otherwise acceptable to landscape architect. If planting of trees occurs after lawn work, protect lawn areas and promptly repair damage to lawns resulting from planting operations.

All plant material must be watered the same day it is planted in order to comply with these specifications. Any plant not watered at the time of planting may be rejected at the option of the landscape architect.

As needed, the Contractor shall hand water newly planted trees twice a week for eight weeks with a minimum of five (5) gallons per tree per watering unless irrigation system is in place and provides adequate water.

All plant material shall be staked and guyed as shown on detail. The stakes will be driven after the tree has been set-in, but before backfilling begins so as to avoid damage to the roots. Any deviation will not be accepted.

3.05 PROTECTION AND CLEAN-UP

A. The Contractor shall remove at the end of each day: excess soil or other litter from roads or other hardscape surfaces (curbs/gutters, walks, driveways, stone patios, steps, walls, decks etc.) and other waste material. All planting sites shall be left in a condition acceptable to the landscape architect. If any remedial action is necessary by the landscape architect, the cost of such action ($50.00 minimum) shall be withheld from payment due the Contractor. Delays in clean-up caused by weather conditions are to be reported to the landscape architect on the day such delays occur, together with and estimate of when clean-up can be affected..

3.06 INSPECTION AND ACCEPTANCE

A. When landscape work is completed, including maintenance, landscape architect may, upon request, make an inspection to determine acceptability.

B. When inspected landscape work does not comply with requirements, replace rejected work and continue specified maintenance until re-inspected by Landscape Architect and found to be acceptable. Remove rejected plants and materials promptly from the project site.

C. Final acceptance shall require that the site be clean and free of any signs of construction in progress. All hardscape areas shall be in like new condition including public streets adjacent to the property that were affected by the construction process.

SECTION 2 - TURF SOD AND SOIL PREPARATION
PART 1 - GENERAL

NOT USED.

PART 2 - TURF SOD

NOT USED.

PART 3 - EXECUTION

3.01 PREPARATION OF SOILS

Report any unusual subsoil condition (ie. roadbase, rocks, etc.) that will require special treatment to the landscape architect.

Where possible, light equipment shall be utilized to deliver and spread topsoil to lawn areas. Sub-grade or topsoil shall not be driven on, placed or spread when ground is muddy from precipitation. Allow ground to adequately dry to avoid compaction of sub-grade and topsoil.

Limit preparation to areas that will be planted promptly after preparation.

Surface drainage shall be ensured and, if shown, shall be directed in the manner indicated on the drawings. Fill low spots and pockets with topsoil and grade to drain properly.

The Contractor shall ensure 6 inches of topsoil in sodded areas or as required to meet lines, grades and elevations shown, after light rolling and natural settlement.

Finish grading shall consist of loosening sub-grade and placing soil, as specified. Bring areas to uniform grade by floating or hand raking. Make minor adjustments of finish grades at the direction of Landscape Architect.

All rocks half inch and larger and non-conforming foreign matter such as building rubble,concrete, wire, cans, sticks, etc., shall be removed from topsoil during finish grading.

Fine grade lawn areas to smooth, even surface with loose, uniformly fine texture. Roll, rake and drag lawn areas, remove ridges and fill depressions, as required to meet finish grades. Limit fine grading to areas which can be planted immediately after grading.

Allow for sod root mass and blade height thickness in areas to be sodded.

Moisten prepared lawn areas before planting if soil is dry. Water thoroughly and allow surface moisture to dry before planting lawn. Do not create a muddy soil condition.

Restore lawn areas to specified condition if eroded or otherwise disturbed after fine grading and prior to planting.

The topsoil shall be placed, water settled, re-graded, and brought to finish grades at a compaction rate of 80% to 85% optimum moisture content. Add additional topsoil as needed to insure minimum depth requirement.

3.02 SOD INSTALLATION

NOT USED.

3.03 CARE AFTER SOD INSTALLATION

NOT USED.

3.04 INSPECTION

A. Pre-Inspection Walk-Through

1. Notify landscape architect 48 hours in advance to schedule pre-inspection.
2. Work of this section shall be completely installed prior to scheduling of walk-through.
3. Generate a "punch list" of items to be corrected, prior to Final Inspection for Substantial Completion.
4. Furnish all required material and equipment and perform all work required to correct deficiencies.

B. Inspection For Substantial Completion

1. Contact landscape architect 48 hours in advance to schedule inspection.
2. Items deemed not acceptable by landscape architect shall be re-worked to the complete satisfaction of the landscape architect.

3.05 TURF WARRANTY AND MAINTENANCE

NOT USED.

3.06 EROSION CONTROL PROTECTION

Temporary erosion control Best Management Practices (BMP'S) shall be utilized where the potential for erosion may occur. BMP's may include but are not limited to the following: silt fencing, fiber rolls or wattles, erosion control blankets or other means may be needed to ensure proper soil stability during and after construction and until the slopes have been established by the re-vegetation process.
Installation of erosion control materials shall be installed as per the manufacturer's recommendation for the existing site conditions.

LIVE DESIGN
WWW.LIVEDSGN.COM

PROJECT NO: 18-17
2437 MARKSHEFFEL ROAD
COLORADO SPRINGS, CO

QUICK QUACK CONSTITUTION

R. AUGUST BATEMAN
1329
08/27/2019
Original Date of Licensure
STATE OF COLORADO
LICENSED LANDSCAPE ARCHITECT

ENG/ARCH: ELEVATE
DRAWN BY: RAB
REVIEWED BY: RAB

DATE: 06 Mar 2019

LANDSCAPE SPECIFICATIONS
LS600

ATTENTION: PRIOR TO PERFORMING ANY WORK ON THIS PLAN CONTRACTOR SHALL IDENTIFY THROUGH BLUESTAKES AND ON-SITE OBSERVATION ANY AND ALL UTILITIES AND HAZARDS OR CONDITIONS THAT MAY PREVENT WORK FROM BEING PERFORMED ACCORDING TO THESE PLANS ABOVE OR BELOW GROUND. IF CONDITIONS ARE FOUND THAT MAY PREVENT WORK FROM BEING PERFORMED AS PER PLAN, CONTRACTOR SHALL CONTACT LANDSCAPE ARCHITECT PRIOR TO PROCEEDING. ANY DAMAGE TO UTILITIES SHALL BE THE CONTRACTOR'S SOLE RESPONSIBILITY (I.E. ELECTRICAL, GAS, WATER,SEWER, ETC.). EVERY EFFORT HAS BEEN MADE TO ENSURE ACCURACY WITH THESE DRAWINGS. QUANTITIES (if and if) LISTED ARE FOR REFERENCE ONLY. CONTRACTOR SHALL VERIFY ALL MEASUREMENTS AND QUANTITIES ON THESE PLANS. ARCHITECT SHALL NOT BE RESPONSIBLE FOR DISCREPANCIES BETWEEN QUANTITIES LISTED IN LEGENDS AND PLAN.
WHERE DISCREPANCIES EXIST BETWEEN SPECIFICATIONS, DETAILS, AND/OR DRAWINGS, CONTRACTOR SHALL CONTACT LANDSCAPE ARCHITECT PRIOR TO PROCEEDING. CONTRACTOR SHALL INSPECT THE SITE TO VERIFY THAT DRAWINGS ARE CONSISTENT WITH SURVEYED BASE INFORMATION. DURING CONSTRUCTION IF DISCREPANCIES ARE FOUND BETWEEN THESE PLANS AND THE SITE, CONTRACTOR SHALL CONTACT THE LANDSCAPE ARCHITECT PRIOR TO PROCEEDING.

Luminaire Schedule

Symbol	Qty	Label	Arrangement	LMF	Lum. Lumens	Lum. Watts	Part Number
	8	T1	SINGLE	1.000	N.A.	30	RS-30WLED-DO-xx-120
	1	SF2b	BACK-BACK	1.000	17291	130	OSQ-A-NM-4ME-K-57K-UL-xx
	3	SF1	SINGLE	1.000	17291	130	OSQ-A-NM-4ME-K-57K-UL-xx
	20	LFL8	LFL 8FT	1.000	N.A.	70	LFL-A-8-DO-UL-SV-53K-SA
	2	LFL4	SINGLE	1.000	N.A.	35	LFL-A-4-DO-UL-SV-53K-SA
	2	F10	WALL MOUNT	1.000	2490	19	XSPW-B-WM-3ME-2L-57K-UL-BZ
	4	F1	SINGLE	1.000	4584	66	FLD-OL-SN-D2-14-E-UL-SV-700

Canopy lights are not shown on the layout.

Canopy lights are downward facing and should not be cause of glare due to angle and degree of canopy sloping.

Calculation Summary (Footcandles calculated using initial lumens @25°C)

Label	Units	Avg	Max	Min	Avg/Min	Max/Min
Property Line	Fc	0.00	0.0	0.0	N.A.	N.A.
Pavement	Fc	4.43	25.9	0.0	N.A.	N.A.
Off Pavement	Fc	0.50	6.7	0.0	N.A.	N.A.

FIXTURE MOUNTING HEIGHTS:
POLE MOUNTED - 18' AFG (16' POLE + 2' BASE)
CANOPY - 12' AFG

ADDITIONAL EQUIPMENT REQUIRED:
(4) CL-SSP-4011-16-D5-xx (16' x 4" SQUARE POLE, 3@90° MOUNT)
PROPOSED POLES MEET 120MPH SUSTAINED WIND LOADS
(5) OSQ-DAxx DIRECT ARM MOUNT

***CUSTOMER TO VERIFY MOUNTING, VOLTAGE, AND COLOR PRIOR TO PLACING ORDER

1' Shield/Baffle 6" away from the fixture to achieve the spill goal.

Section 6.2.3(B)(1)(d) Maximum Levels, on-site lighting shall not exceed 10 footcandles throughout the site.

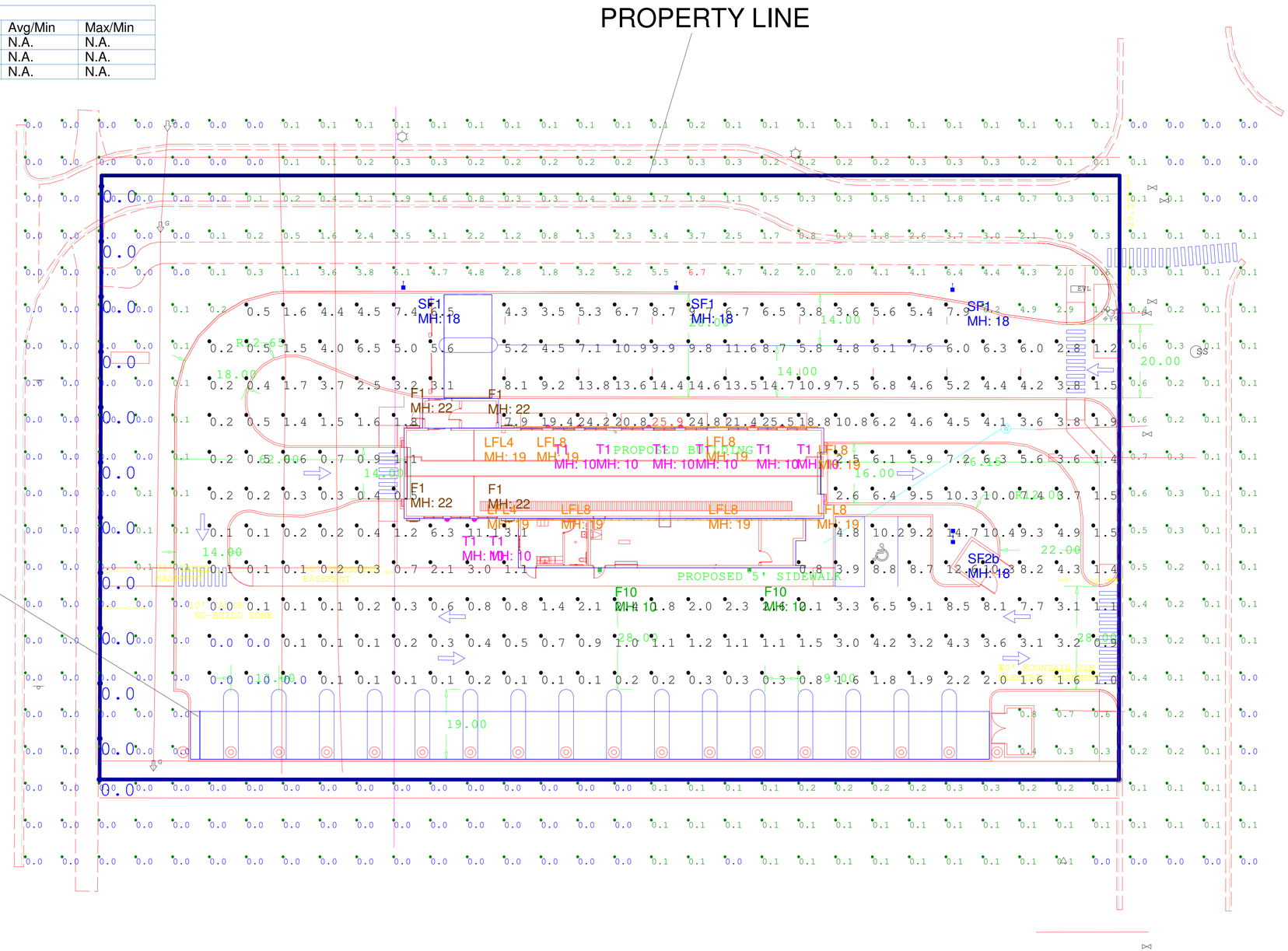

CREE
1200 92nd Street - Sturtevant, WI 53177 www.cree.com - (800) 236-6800

Illumination results shown on this lighting design are based on project parameters provided to Cree, Inc. used inconjunction with luminaire test procedures conducted under laboratory conditions. Actual project conditions differing from these design parameters may affect field results. The customer is responsible for verifying dimensional accuracy along with compliance with any applicable electrical, lighting,or energy code.

Project Name: QQ - 2437 Marksheffel Rd., Colorado Springs, CO 80951

SR-34704 | Footcandles calculated at grade | Filename: QQ-181210CSCOBAFR2.AGI

Layout By: Ben Foster
Date:3/5/2019

Scale 1" = 16'
0 32 64

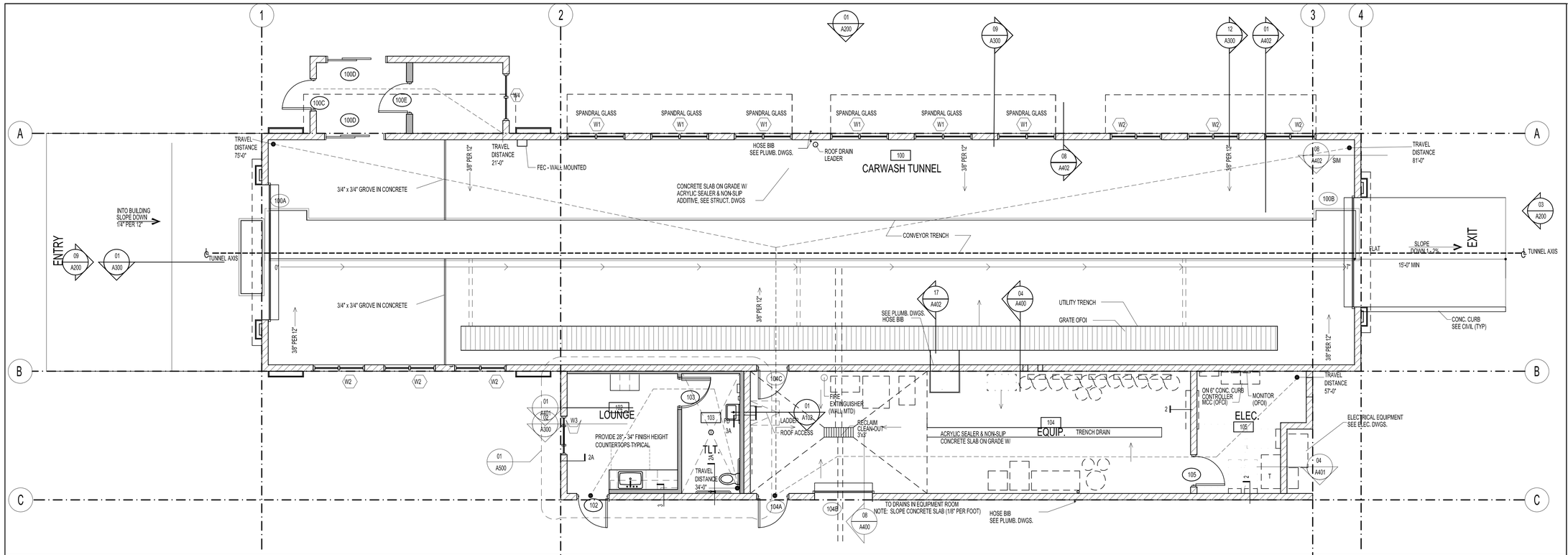

ANNOTATION FLOOR PLAN | SCALE: 3/16" = 1'-0" 02

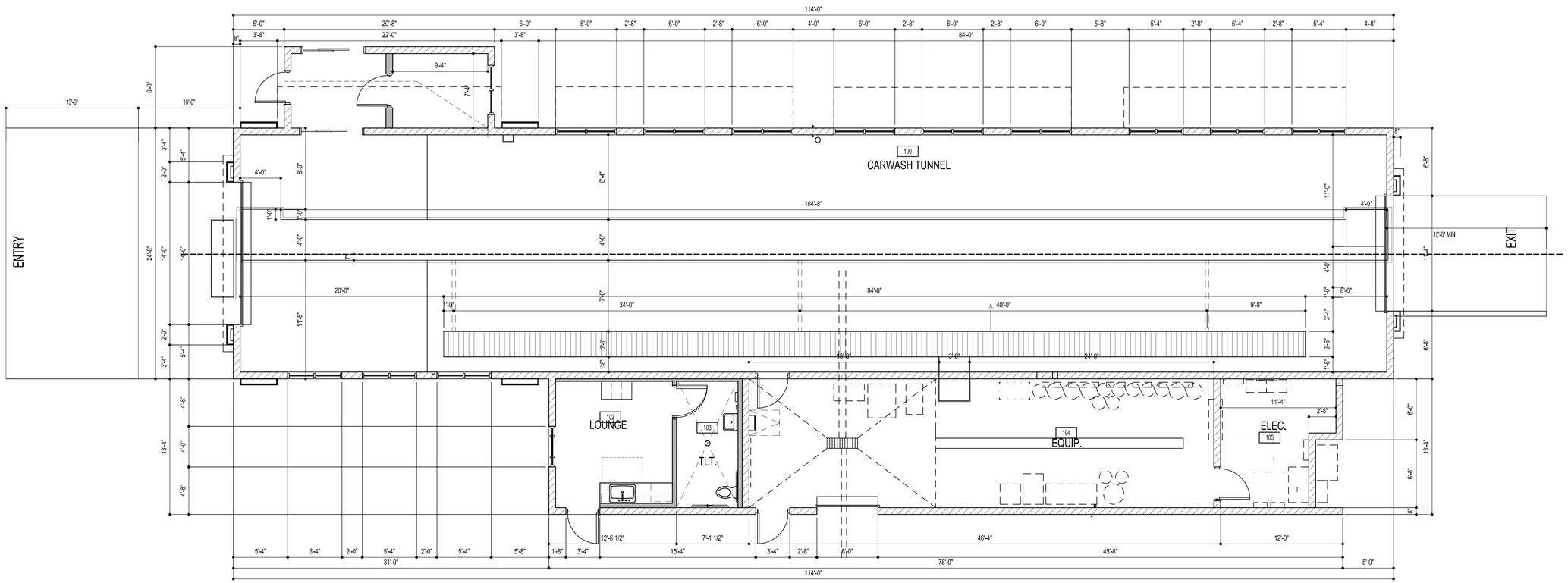

DIMENSION FLOOR PLAN | SCALE: 3/16" = 1'-0" 01

PROJECT NOTES

ALL EXTERIOR WALL TO BE FILLED WITH PERLILTE INSULATION

Service counters 36 maximum height. Also areas used for check writing must have an area that is no more than 34 inches maximum in height. Work service counters 28-34 inches maximum in height ANSI 904.4.2 & 904.4.3 (Front Reception Counters and Breakroom)

PROJECT TITLE

Constitutional and Marksheffel

DAIN & ASSOCIATES
ARCHITECTURE DESIGN PROJECT MANAGEMENT
JAMES A. DAIN ARCHITECT
PHONE (801) 225-8803

DATE: November 29 2018

REVISIONS:

A100

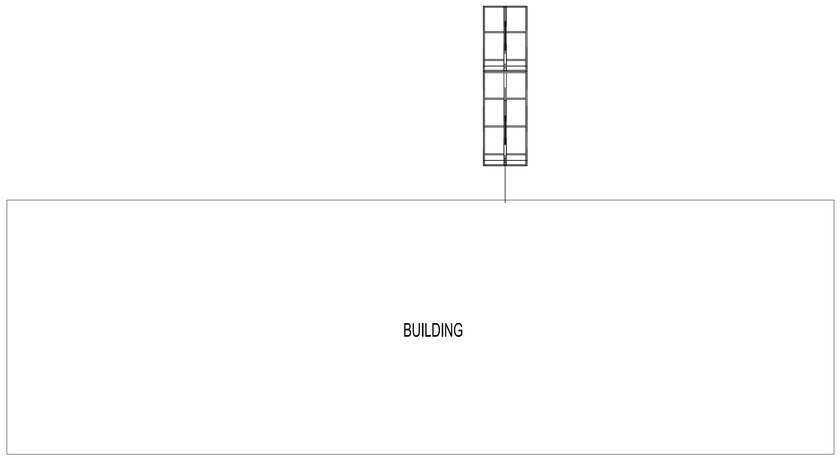

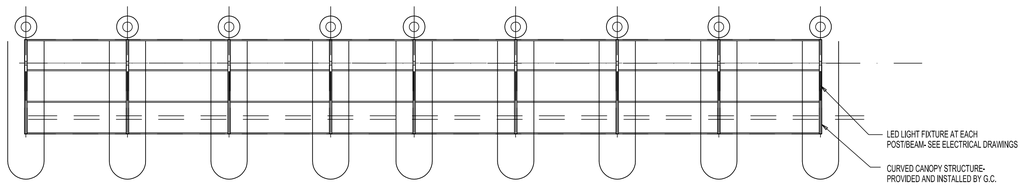

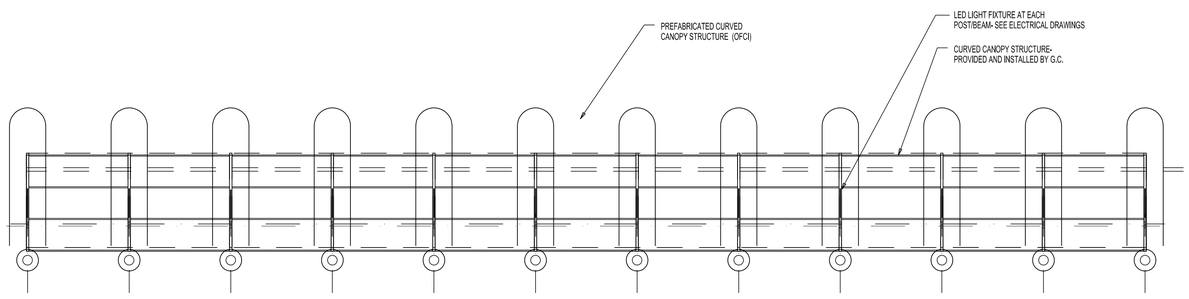

TYPICAL BASIC LAYOUT VERIFY WITH SITE FOR FINAL LOCATION AND LAYOUT

TYPICAL BASIC LAYOUT | SCALE: 1"=10'-0" | 04

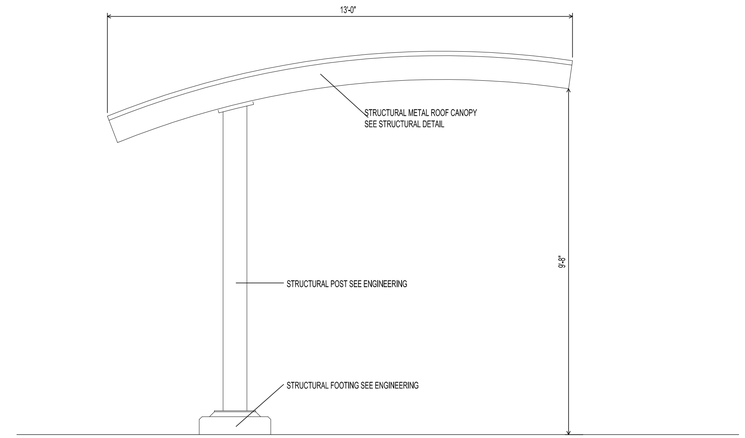

CANOPY SECTION | SCALE: N.T.S. | 03

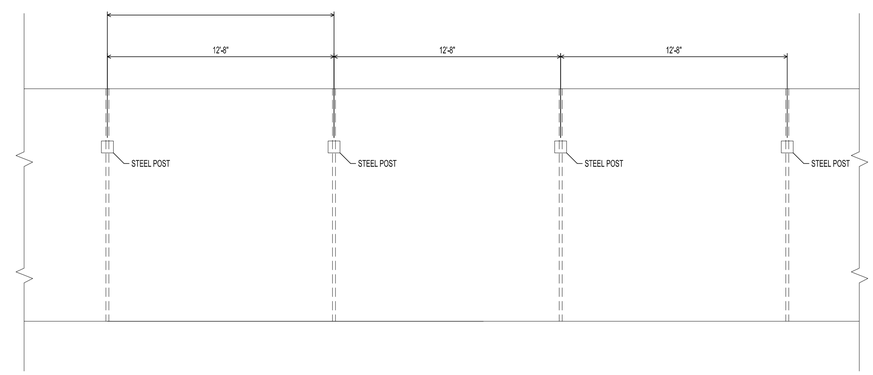

CANOPY ELEVATION | SCALE: N.T.S. | 02

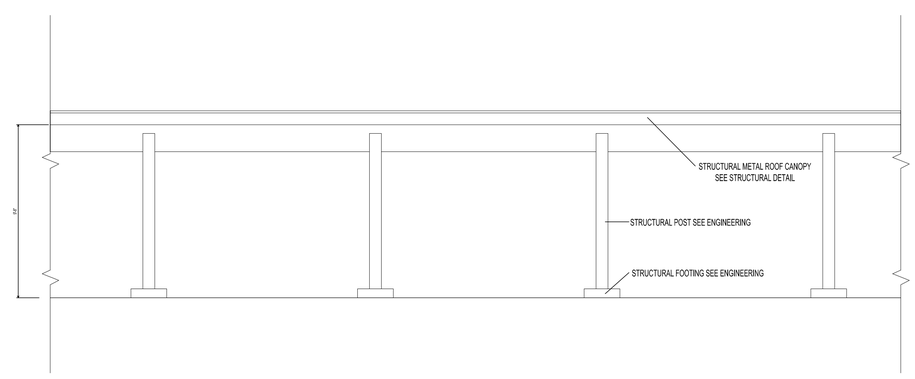

CANOPY ELEVATION | SCALE: 1"=10'-0" | 01

PROJECT NOTES

CANOPY IS TYPICAL FOR BOTH THE VACUUM AND PAY STATION

PROJECT TITLE

Constitutional and Marksheffel

DAIN & ASSOCIATES
ARCHITECTURE DESIGN PROJECT MANAGEMENT
JAMES A. DAIN ARCHITECT
PHONE (801) 228-8805

DATE: February 23, 2019

REVISIONS:

A104

EXTERIOR FINISH SCHEDULE

LABEL	MATERIAL	COLOR / MANUFACTURER
CMU1	SPLIT-FACE CMU	INTEGRAL COLOR (DARK GREY) TO MATCH SW 7025 "BACKDROP"
CMU2	SMOOTH FACE CMU	INTEGRAL COLOR (LIGHT GREY) TO MATCH SW 7638 "JOGGING PATH"
S-1	STUCCO	MATCH SW 6755 "STARBOARD" (GREEN)
S-2	STUCCO	MATCH SW 6903 "CHEERFUL" (YELLOW)
S-3	STUCCO	DRYVITT MOONLIGHT
S-4	STUCCO	SW 6755 "STARBOARD" (GREEN)
P-1	PAINT	SW 6755 "STARBOARD" (GREEN)
P-2	PAINT	SW 6903 "CHEERFUL" (YELLOW)
P-3	PAINT	SW 7025 "BACKDROP" (DARK GREY)
M-1	STANDING SEAM ROOFING	MATCH SW 6755 "STARBOARD" (GREEN)

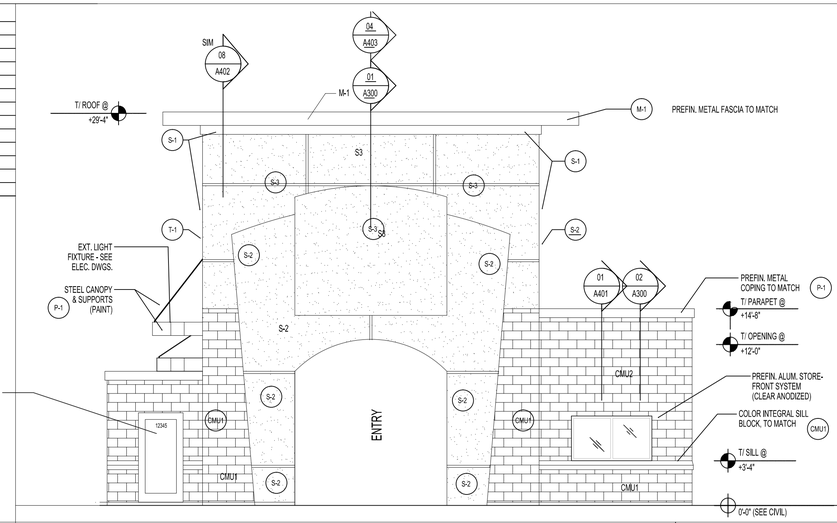

EXTERIOR ELEVATION SCALE: 3/16" = 1'-0" 04

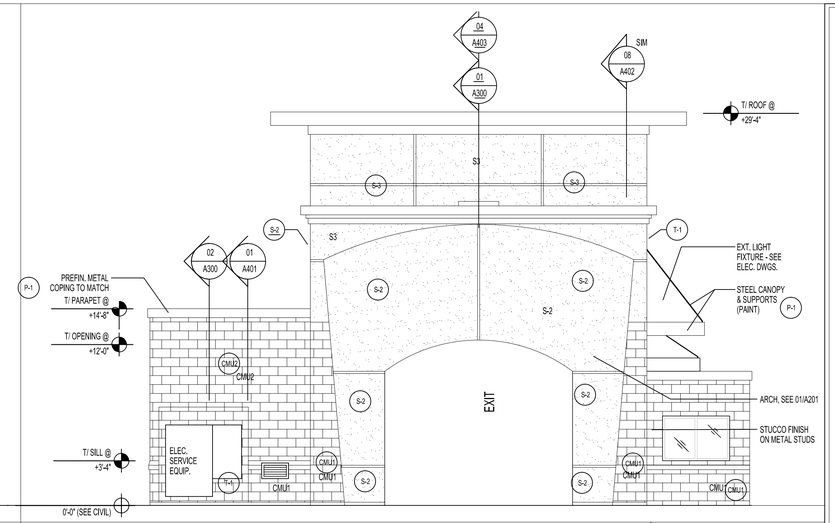

EXTERIOR ELEVATION SCALE: 3/16" = 1'-0" 03

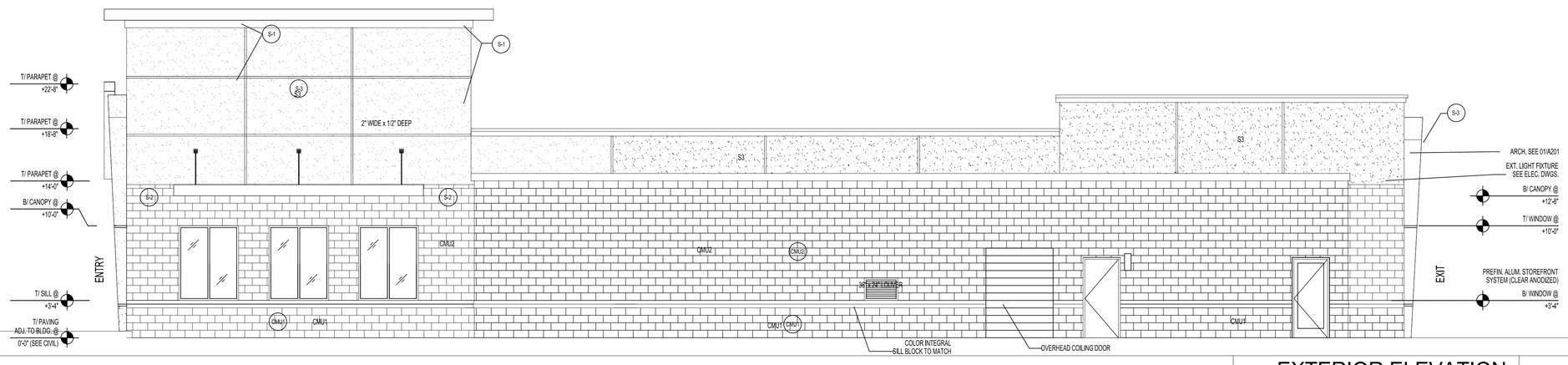

EXTERIOR ELEVATION SCALE: 3/16" = 1'-0" 02

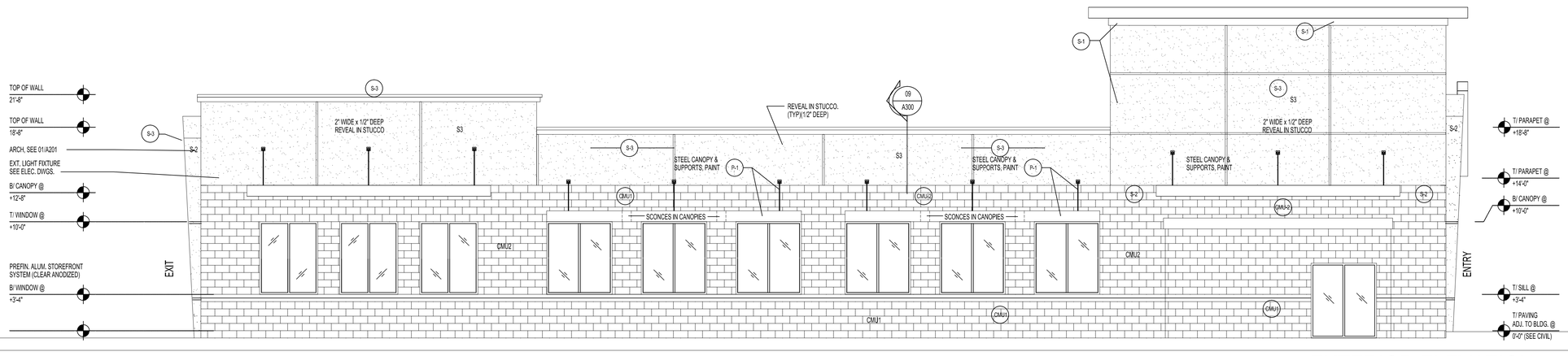

EXTERIOR ELEVATION SCALE: 3/16" = 1'-0" 01

PROJECT NOTES

PROJECT TITLE

Constitutional and Marksheffel

DAIN & ASSOCIATES
ARCHITECTURE DESIGN PROJECT MANAGEMENT
JAMES A. DAIN ARCHITECT
PHONE (801) 228-8805

DATE: January 3 2019

REVISIONS:

A200

EXTERIOR FINISH SCHEDULE

LABEL	MATERIAL	COLOR / MANUFACTURER
CMU1	SPLIT-FACE CMU	INTEGRAL COLOR (DARK GREY) TO MATCH SW 7025 "BACKDROP"
CMU2	SMOOTH FACE CMU	INTEGRAL COLOR (LIGHT GREY) TO MATCH SW 7638 "JOGGING PATH"
S-1	STUCCO	MATCH SW 6755 "STARBOARD" (GREEN)
S-2	STUCCO	MATCH SW 6903 "CHEERFUL" (YELLOW)
S-3	STUCCO	DRYVITT MOONLIGHT
S-4	STUCCO	SW 6755 "STARBOARD" (GREEN)
P-1	PAINT	SW 6755 "STARBOARD" (GREEN)
P-2	PAINT	SW 6903 "CHEERFUL" (YELLOW)
P-3	PAINT	SW 7025 "BACKDROP" (DARK GREY)
M-1	STANDING SEAM ROOFING	MATCH SW 6755 "STARBOARD" (GREEN)

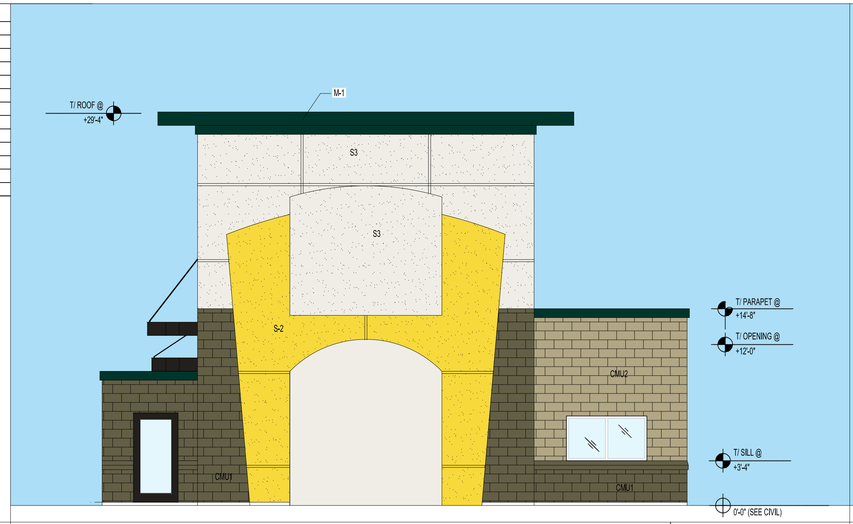

EXTERIOR ELEVATION SCALE: 3/16" = 1'-0" 04

EXTERIOR ELEVATION SCALE: 3/16" = 1'-0" 03

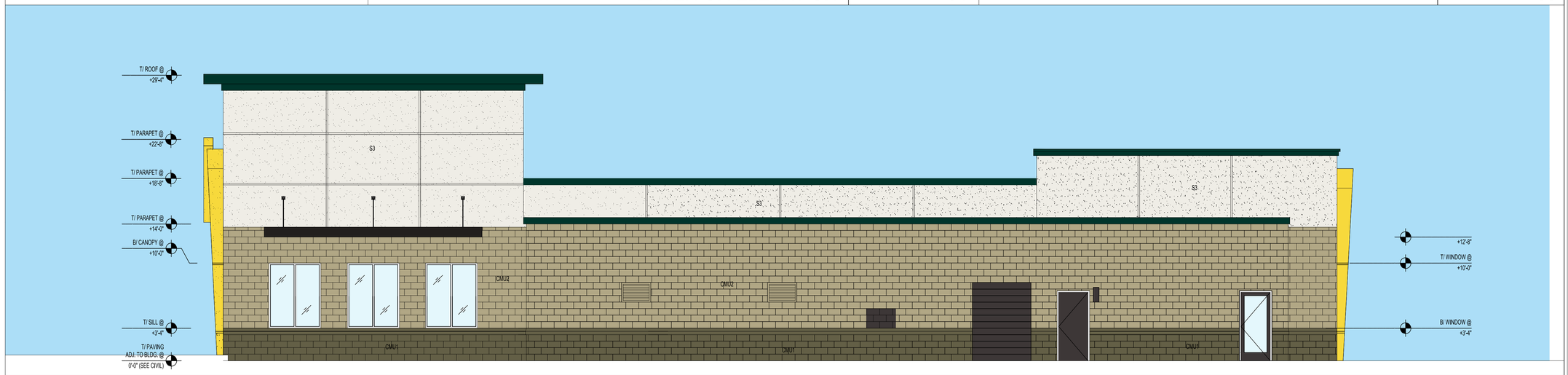

EXTERIOR ELEVATION SCALE: 3/16" = 1'-0" 02

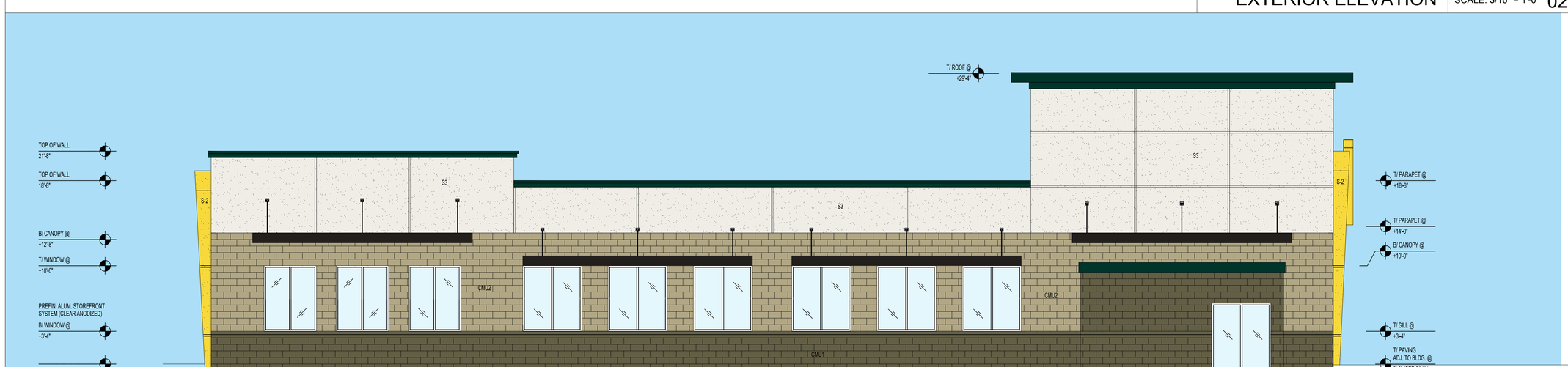

EXTERIOR ELEVATION SCALE: 3/16" = 1'-0" 01

PROJECT NOTES

PROJECT TITLE

Constitutional and Marksheffel

DAIN & ASSOCIATES
ARCHITECTURE DESIGN PROJECT MANAGEMENT
JAMES A. DAIN ARCHITECT
PHONE (801) 226-8805

DATE: February 23, 2019

REVISIONS:

A200

QUICK QUACK CAR WASH | PROPOSED SIGNAGE | WALL SIGN

MANUFACTURE AND INSTALL

(2) SETS OF FRONT LIT WALL SIGNS WITH VACUUM-FORMED FACES

- **A** FACES: 3/16" CLEAR PLEX, VACUUM-FORMED WITH VINYL AND PAINTED GRAPHICS ON 2ND SURFACE
- **B** RETAINERS: ALL ALUMINUM, 2" PAINTED WHITE
- **C** RETURNS: ALL ALUMINUM 8" DEEP, PAINTED WHITE
- **D** BACKS: ALL ALUMINUM STOCK COLOR
- **E** ILLUMINATION: WHITE LEDs
  CANNOT EXCEED 2 FT CANDLES AS MEASURED 1 FT. FROM THE SURFACE OF THE SIGN
- **F** POWER SUPPLY: HOUSED IN SIGN CABINET
- **G** FLUSH MOUNTED TO FASCIA (SEE ATTACHMENT DETAIL)

- DISCONNECT SWITCH AT SIGN
- 120V SERVICE SUPPLIED BY OTHERS

POWER REQUIREMENTS PROVIDED BY OTHERS
(1) 20 AMP CIRCUIT
120 VOLTS

PMS 3425, 3M EMERALD GREEN 230-126

PMS 7404, 3M YELLOW 230015

PMS ORANGE 021, 3M ORANGE 230-44

PMS BLACK, 3M BLACK 230-22

NIGHT VIEW

A1 PRIMARY SIGNAGE

A separate sign permit will be required, please inform the planner if you will also will be applying for the sign permit so I can create the project

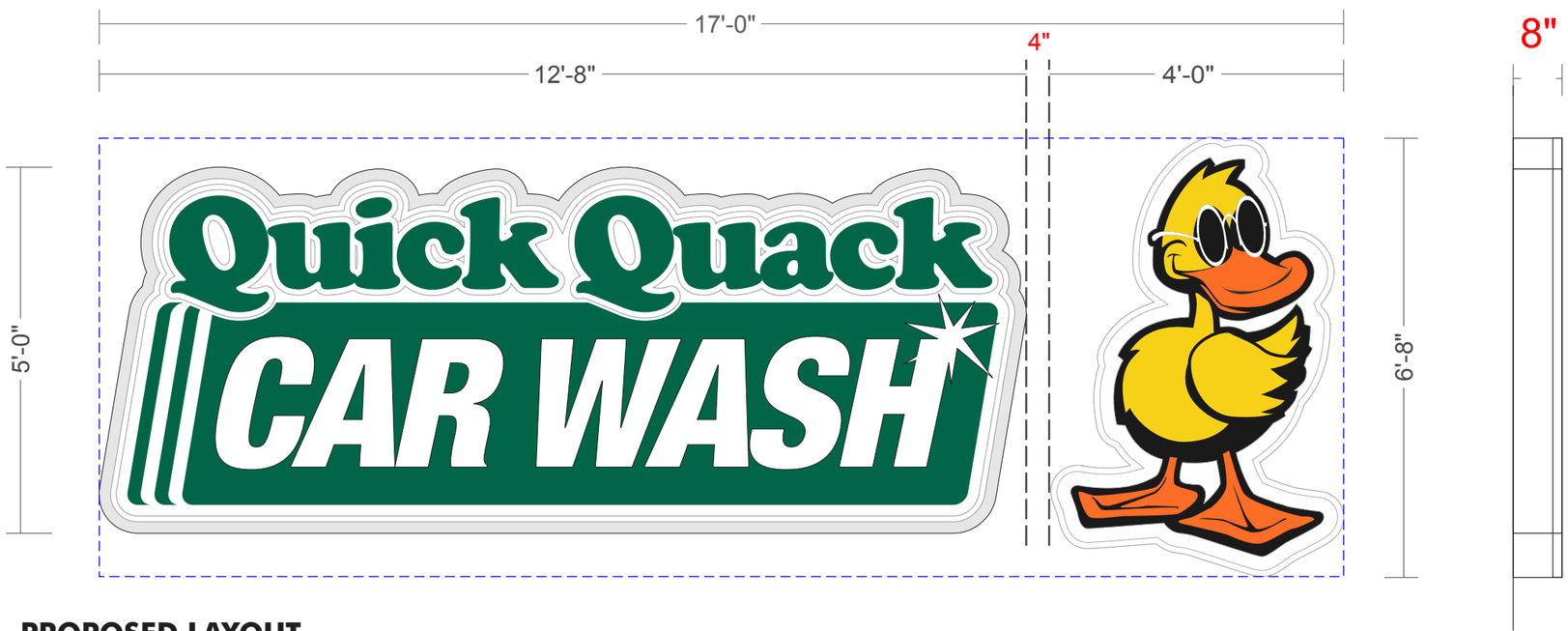

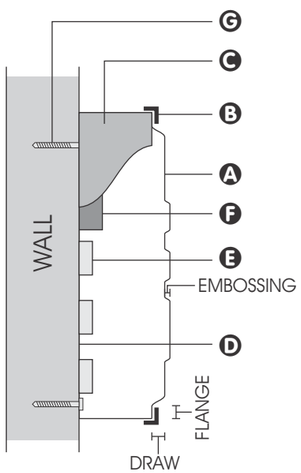

TYPICAL SECTION VIEW
NTS

PROPOSED LAYOUT
SCALE: 1/2"=1'-0"

PROPOSED SIGNAGE = 113.33 SF

Utah Contractors: 375809-5501 • Nevada:60486 • Colorado:237787 • Idaho:RCE-29969

THIS IS AN ORIGINAL UNPUBLISHED DRAWING CREATED BY ALLIED ELECTRIC SIGN. IT IS SUBMITTED FOR YOUR PERSONAL USE IN CONNECTION WITH THE PROJECT BEING PLANNED FOR YOU. IT IS NOT TO BE REPRODUCED, COPIED OR EXHIBITED.

ALLIED ELECTRIC SIGN & Awning
Signs that build business!

UTAH COUNTY:
1852 N. 1300 W.
(801) 489-3645
WWW.ALLIED-SIGN.COM

DRAWING STEPS
- CONCEPT
- ESTIMATING
- PERMIT/LANDLORD
- PRODUCTION/INSTALL

DRAWING REVIEW NAME
SURVEY NAME
PRODUCTION REVIEW NAME
INSTALL REVIEW NAME

Client: Quick Quack Car Wash	SALES APPROVAL:	CUSTOMER APPROVAL / REVISIONS
Address:	Designer: Richard	SIGNATURE
Colorado Springs, CO	Sales: Regina	
File Name: Quick Quack (Saratoga Springs, UT) - Sign Package - 09-07-2016		

SALT LAKE CITY: 1920 S. 900 W., SALT LAKE CITY, UT • (801) 972-5503 OGDEN: 2924 Pennsylvania Avenue • (801) 621-4612

QUICK QUACK CAR WASH | PROPOSED SIGNAGE | WALL SIGN

MANUFACTURE AND INSTALL

(1) SET OF NON-ILLUMINATED WALL SIGNS WITH VACUUM-FORMED FACES

(1) SET OF ILLUMINATED WALL SIGNS WITH VACUUM-FORMED FACES

- **A** FACES: 3/16" CLEAR PLEX, VACUUM-FORMED WITH VINYL AND PAINTED GRAPHICS ON 2ND SURFACE
- **B** RETAINERS: ALL ALUMINUM, 2" PAINTED WHITE
- **C** RETURNS: ALL ALUMINUM 8" DEEP, PAINTED WHITE
- **D** BACKS: ALL ALUMINUM STOCK COLOR
- **E** ILLUMINATION: WHITE LEDs
- **F** POWER SUPPLY: HOUSED IN SIGN CABINET
- **G** FLUSH MOUNTED TO FASCIA (SEE ATTACHMENT DETAIL)

- DISCONNECT SWITCH AT SIGN
- 120V SERVICE SUPPLIED BY OTHERS

POWER REQUIREMENTS PROVIDED BY OTHERS
(1) 20 AMP CIRCUIT
120 VOLTS

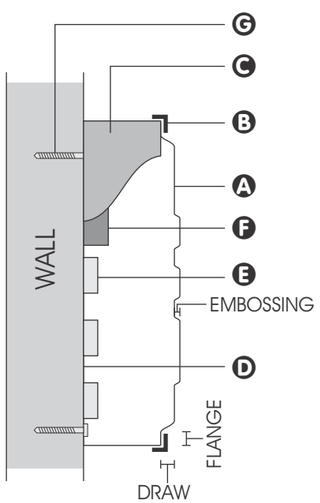

A separate sign permit will be required, please inform the planner if you will also will be applying for the sign permit so I can create the project

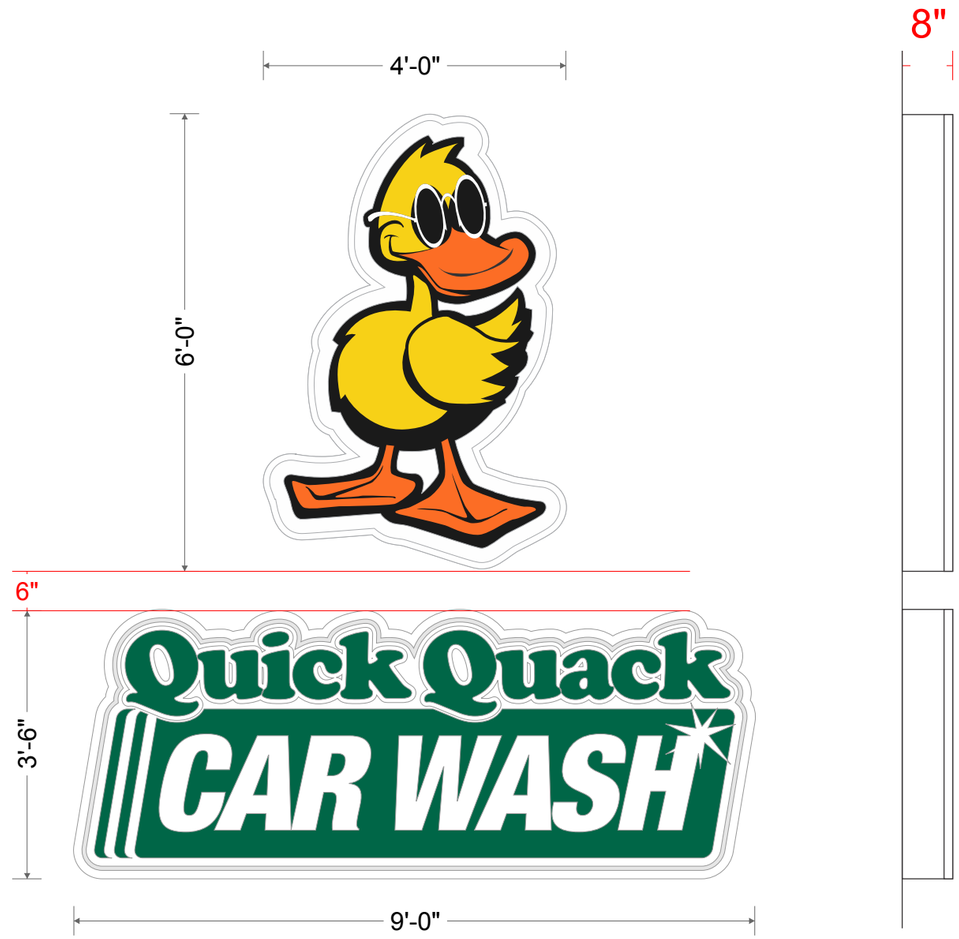

PROPOSED LAYOUT

SCALE: 1/2"=1'-0"

PROPOSED SIGNAGE = 55.50 SF

ACCURATE FIELD SURVEY REQUIRED PRIOR TO FABRICATION

B1 SECONDARY SIGNAGE **NOT ILLUMINATED**

B2 SECONDARY SIGNAGE

- PMS 3425, 3M EMERALD GREEN 230-126
- PMS 7404, 3M YELLOW 230015
- PMS ORANGE 021, 3M ORANGE 230-44
- PMS BLACK, 3M BLACK 230-22

Utah Contractors: 375809-5501 • Nevada:60486 • Colorado:237787 • Idaho:RCE-29969

THIS IS AN ORIGINAL UNPUBLISHED DRAWING CREATED BY ALLIED ELECTRIC SIGN. IT IS SUBMITTED FOR YOUR PERSONAL USE IN CONNECTION WITH THE PROJECT BEING PLANNED FOR YOU. IT IS NOT TO BE REPRODUCED, COPIED OR EXHIBITED.

ALLIED ELECTRIC SIGN & Awning
Signs that build business!

UTAH COUNTY:
1852 N. 1300 W.
(801) 489-3645
WWW.ALLIED-SIGN.COM

DRAWING STEPS
- ☐ CONCEPT
- ☐ ESTIMATING
- ☐ PERMIT/LANDLORD
- ☐ PRODUCTION/INSTALL

DRAWING REVIEW NAME
SURVEY
PRODUCTION REVIEW NAME
INSTALL REVIEW NAME

Client: Quick Quack Car Wash
Address: Colorado Springs, CO
File Name: Quick Quack (Saratoga Springs, UT) - Sign Package - 09-07-2016

SALES APPROVAL:
Designer: Richard
Sales: Regina

CUSTOMER APPROVAL
SIGNATURE

REVISIONS

SALT LAKE CITY: 1920 S. 900 W., SALT LAKE CITY, UT • (801) 972-5503 **OGDEN:** 2924 Pennsylvania Avenue • (801) 621-4612

QUICK QUACK CAR WASH | PROPOSED SIGNAGE | METAL CANOPIES

MANUFACTURE AND INSTALL

(4) SUSPENDED METAL CANOPIES

- Ⓐ PROJECTION: (4) @ 4'-0"
- Ⓑ DROP: (2) @ 3'-8", (2) @ 7'-0"
- Ⓒ WIDTH: (4) @ 23'-4"
- Ⓓ TURNBUCKLE AND RODS, PAINTED P1
- Ⓔ CANOPY FRAME: 2"x12" ALL ALUMINUM CONSTRUCTION, PAINTED P1

PAINT TO MATCH SW 6755 "STARBOARD" GREEN

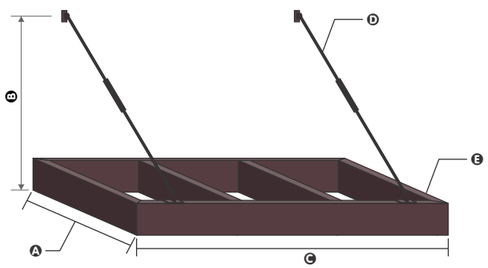

TYPICAL METAL AWNING
NTS (FINAL FRAMING MAY VARY)

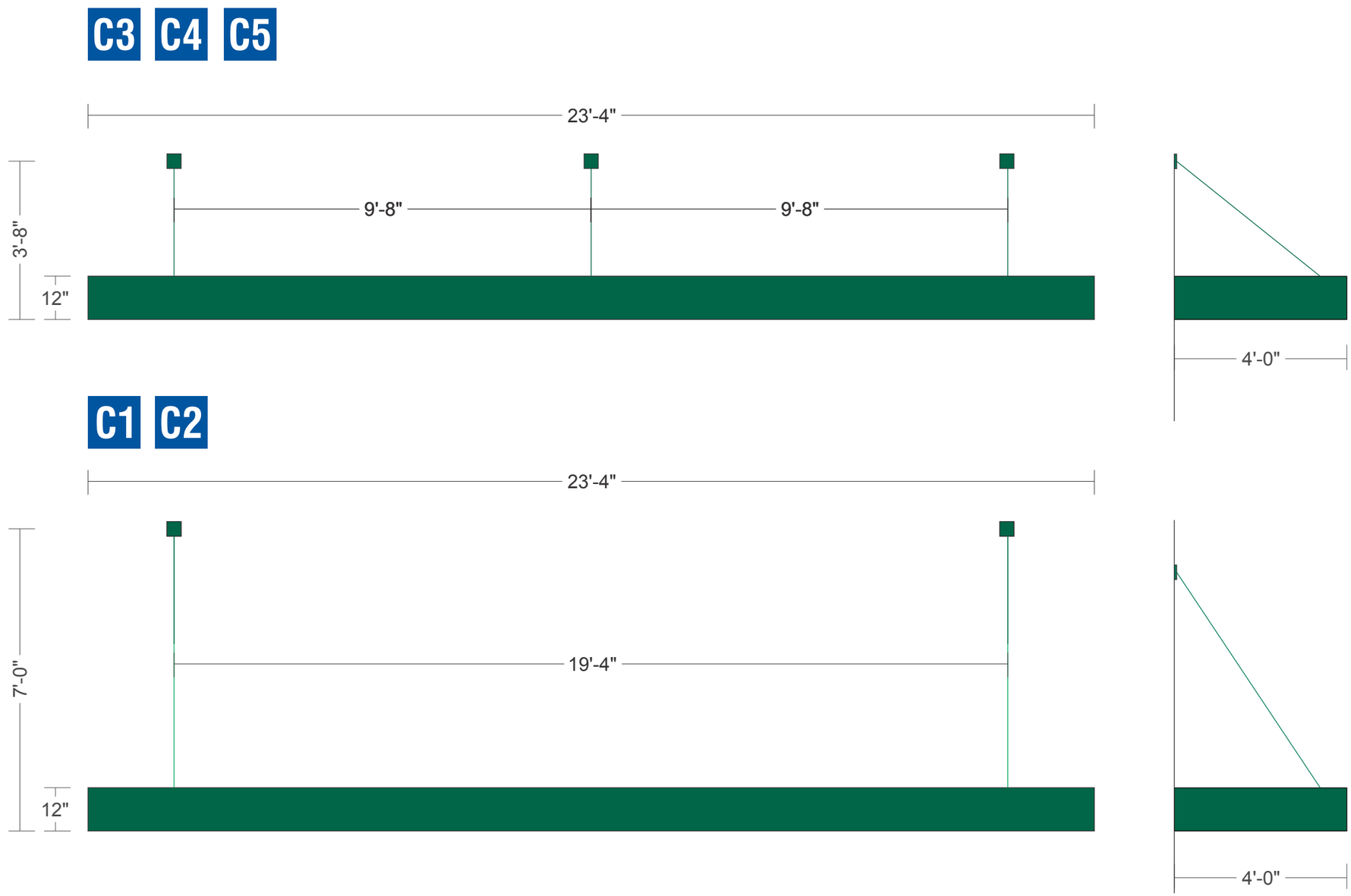

PROPOSED LAYOUT

SCALE: 3/8"=1'-0"

Utah Contractors: 375809-5501 • Nevada:60486 • Colorado:237787 • Idaho:RCE-29969

THIS IS AN ORIGINAL UNPUBLISHED DRAWING CREATED BY ALLIED ELECTRIC SIGN. IT IS SUBMITTED FOR YOUR PERSONAL USE IN CONNECTION WITH THE PROJECT BEING PLANNED FOR YOU. IT IS NOT TO BE REPRODUCED, COPIED OR EXHIBITED.

ALLIED ELECTRIC SIGN & Awning
Signs that build business!

UTAH COUNTY:
1852 N. 1300 W.
(801) 489-3645
WWW.ALLIED-SIGN.COM

DRAWING STEPS
- ☐ CONCEPT
- ☐ ESTIMATING
- ☐ PERMIT/LANDLORD
- ☐ PRODUCTION/INSTALL

DRAWING REVIEW	SURVEY	PRODUCTION REVIEW	INSTALL REVIEW
NAME	NAME	NAME	NAME

Client: Quick Quack Car Wash
Address: Colorado Springs, CO
File Name: Quick Quack (Saratoga Springs, UT) - Sign Package - 09-07-2016

SALES APPROVAL:
Designer: Richard
Sales: Regina

CUSTOMER APPROVAL
SIGNATURE

REVISIONS

SALT LAKE CITY: 1920 S. 900 W., SALT LAKE CITY, UT • (801) 972-5503 **OGDEN:** 2924 Pennsylvania Avenue • (801) 621-4612

QUICK QUACK CAR WASH | PROPOSED SIGNAGE | ELEVATIONS

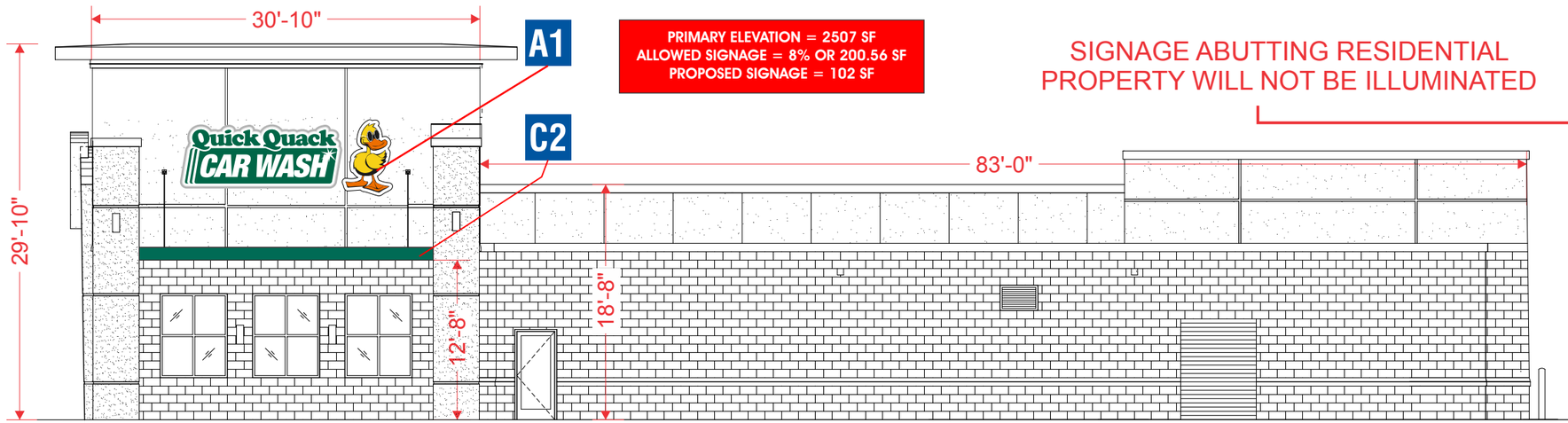

PRIMARY ELEVATION = 2507 SF
ALLOWED SIGNAGE = 8% OR 200.56 SF
PROPOSED SIGNAGE = 102 SF

SIGNAGE ABUTTING RESIDENTIAL PROPERTY WILL NOT BE ILLUMINATED

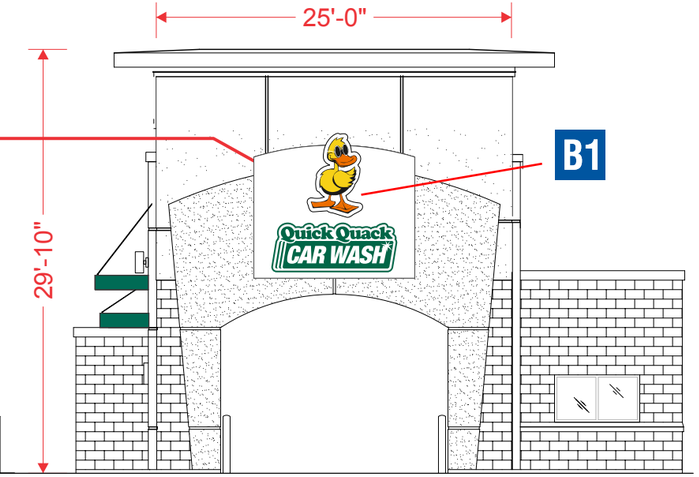

PRIMARY ELEVATION

SCALE: 3/32"=1'-0"

SECONDARY ELEVATION

SCALE: 3/32"=1'-0"

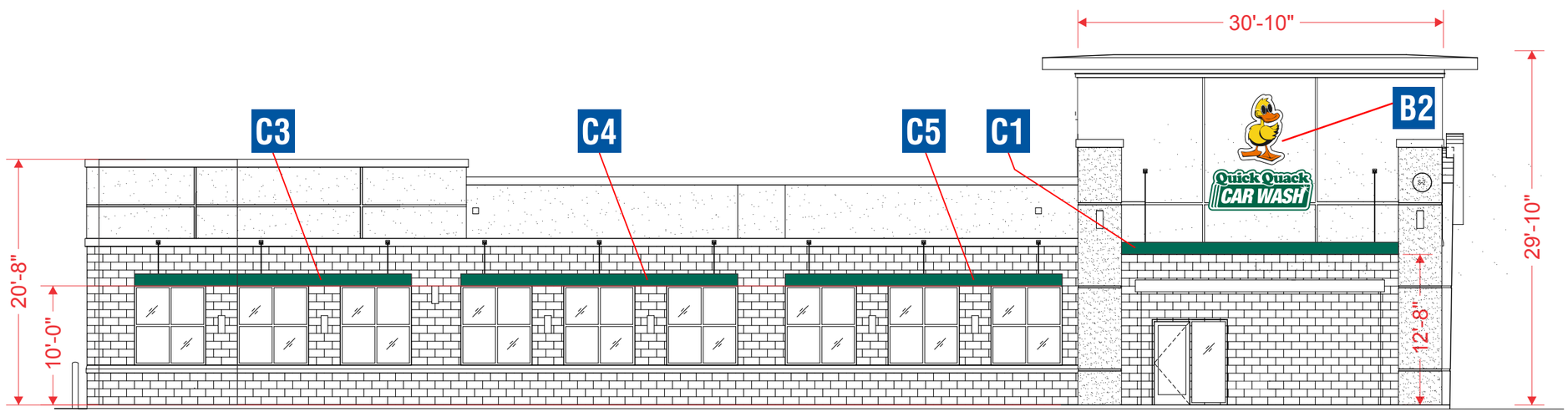

B1 — SECONDARY ELEVATION
ALLOWED SIGNAGE = 56.65 SF
PROPOSED SIGNAGE = 55.50 SF

B1 — SECONDARY ELEVATION
ALLOWED SIGNAGE = 56.65 SF
PROPOSED SIGNAGE = 55.50 SF

SECONDARY ELEVATION

SCALE: 3/32"=1'-0"

Utah Contractors: 375809-5501 • Nevada:60486 • Colorado:237787 • Idaho:RCE-29969

THIS IS AN ORIGINAL UNPUBLISHED DRAWING CREATED BY ALLIED ELECTRIC SIGN. IT IS SUBMITTED FOR YOUR PERSONAL USE IN CONNECTION WITH THE PROJECT BEING PLANNED FOR YOU. IT IS NOT TO BE REPRODUCED, COPIED OR EXHIBITED.

ALLIED ELECTRIC SIGN & Awning
Signs that build business!

UTAH COUNTY:
1852 N. 1300 W.
(801) 489-3645
WWW.ALLIED-SIGN.COM

SALT LAKE CITY: 1920 S. 900 W., SALT LAKE CITY, UT • (801) 972-5503 OGDEN: 2924 Pennsylvania Avenue • (801) 621-4612

DRAWING STEPS
- CONCEPT
- ESTIMATING
- PERMIT/LANDLORD
- PRODUCTION/INSTALL

DRAWING REVIEW	NAME
SURVEY	NAME
PRODUCTION REVIEW	NAME
INSTALL REVIEW	NAME

Client: Quick Quack Car Wash
Address: Colorado Springs, CO
File Name: Quick Quack (Saratoga Springs, UT) - Sign Package - 09-07-2016

SALES APPROVAL:
Designer: Richard
Sales: Regina

CUSTOMER APPROVAL
SIGNATURE

REVISIONS

QUICK QUACK CAR WASH | PROPOSED SIGNAGE | MONUMENT SIGN

MANUFACTURE AND INSTALL

(1) D/F MONUMENT SIGN

- **A** MAIN SIGN BODY: ALL ALUMINUM CONSTRUCTION, PAINTED P1-P2
- **B** FACES: 3/16" CLEAR PLEX, VACUUM-FORMED WITH VINYL AND PAINTED GRAPHICS ON 2ND SURFACE
- **C** RETAINERS: 1" .090 ALUMINUM" PAINTED P2
- **D** REVEAL: 1" PAINTED WHITE
- **E** "OPEN" SIGN: ALL ALUMINUM CONSTRUCTION, 3/16" TRANS WHTE SG PLEX WITH VINYL GRAPHICS APPLIED
- **F** ADDRESS: 1/4" FCO ALUMINUM PAINTED BLACK
- **G** STONE BASE: **TO MATCH BUILDING** INSTALLED BY 3RD PARTY
- **H** MOW PAD: CONC. 3" ABOVE GRADE

- INTERNALLY ILLUMINATED WITH WHITE LEDs
  CANNOT EXCEED 2 FT CANDLES AS MEASURED 1 FT. FROM THE SURFACE OF THE SIGN
- POWER SUPPLY HOUSED IN SIGN BODY
- SUPPORT AND FOOTING (TBD)
- DISCONNECT SWITCH AT SIGN
- 120V SERVICE SUPPLIED BY OTHERS
- ELECTRICAL SWEEP BY OTHERS
- ELECTRICAL GROUNDED TO PIPE SUPPORT

PMS 3425, 3M EMERALD GREEN 230-126

PMS 7404, 3M YELLOW 230015

PMS ORANGE 021, 3M ORANGE 230-44

PMS BLACK, 3M BLACK 230-22

PROPOSED SIGNAGE = 25 SQ.FT.

PROPOSED LAYOUT

SCALE: 3/4"=1'-0"

Utah Contractors: 375809-5501 • Nevada:60486 • Colorado:237787 • Idaho:RCE-29969

THIS IS AN ORIGINAL UNPUBLISHED DRAWING CREATED BY ALLIED ELECTRIC SIGN. IT IS SUBMITTED FOR YOUR PERSONAL USE IN CONNECTION WITH THE PROJECT BEING PLANNED FOR YOU. IT IS NOT TO BE REPRODUCED, COPIED OR EXHIBITED.

ALLIED ELECTRIC SIGN & Awning
Signs that build business!

UTAH COUNTY:
1852 N. 1300 W.
(801) 489-3645
WWW.ALLIED-SIGN.COM

DRAWING STEPS
- CONCEPT
- ESTIMATING
- PERMIT/LANDLORD
- PRODUCTION/INSTALL

DRAWING REVIEW NAME
SURVEY NAME
PRODUCTION REVIEW NAME
INSTALL REVIEW NAME

Client: Quick Quack Car Wash
Address:
Colorado Springs, CO
File Name: Quick Quack (Saratoga Springs, UT) - Sign Package - 09-07-2016

SALES APPROVAL:
Designer: Richard
Sales: Regina

CUSTOMER APPROVAL
SIGNATURE

REVISIONS

SALT LAKE CITY: 1920 S. 900 W., SALT LAKE CITY, UT • (801) 972-5503 **OGDEN:** 2924 Pennsylvania Avenue • (801) 621-4612

Markup Summary

dsdsevigny (6)

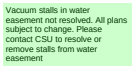

Subject: Text Box
Page Label: [1] QQ CO CONSTITUTION 1H-COVER
Lock: Locked
Author: dsdsevigny
Date: 4/2/2019 10:52:55 AM
Color:

Vacuum stalls in water easement not resolved. All plans subject to change. Please contact CSU to resolve or remove stalls from water easement

---

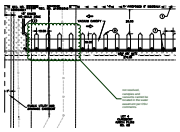

Subject: Cloud+
Page Label: [2] QQ CO CONSTITUTION 1H-SITE
Lock: Locked
Author: dsdsevigny
Date: 4/2/2019 10:52:56 AM
Color:

not resolved, canopies and vacuums cannot be located in the water easement per CSU comments.

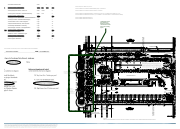

Subject: Cloud+
Page Label: [6] QQ CO CONSTITUTION 1H-DETAILS (2)
Lock: Locked
Author: dsdsevigny
Date: 4/2/2019 10:52:57 AM
Color:

Landscaping cannot be located in the ROW, the previous comment was to add trees to the existing layout

---

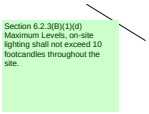

Subject: Text Box
Page Label: [6] QQ CO CONSTITUTION 1H-DETAILS (2)
Lock: Locked
Author: dsdsevigny
Date: 4/2/2019 10:52:58 AM
Color:

Section 6.2.3(B)(1)(d) Maximum Levels, on-site lighting shall not exceed 10 footcandles throughout the site.

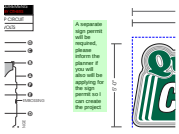

Subject: Text Box
Page Label: [6] QQ CO CONSTITUTION 1H-DETAILS (2)
Lock: Locked
Author: dsdsevigny
Date: 4/2/2019 10:52:59 AM
Color:

A separate sign permit will be required, please inform the planner if you will also will be applying for the sign permit so I can create the project

---

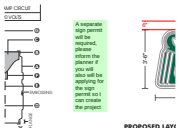

Subject: Text Box
Page Label: [6] QQ CO CONSTITUTION 1H-DETAILS (2)
Lock: Locked
Author: dsdsevigny
Date: 4/2/2019 10:53:00 AM
Color:

A separate sign permit will be required, please inform the planner if you will also will be applying for the sign permit so I can create the project